(25,400)

SUPREME COURT OF THE UNITED STATES.

OCTOBER TERM, 1917.

No. 226.

THE T. H. SYMINGTON COMPANY, PETITIONER,

vs.

THE NATIONAL MALLEABLE CASTINGS COMPANY AND J. J. BYERS.

ON WRIT OF CERTIORARI TO THE UNITED STATES CIRCUIT COURT OF APPEALS FOR THE FIRST CIRCUIT.

INDEX.

	Original.	Print
Caption	*a*	1
Transcript of record from the district court of the United States for the district of Maine	1	1
Bill of complaint	1	1
Plaintiffs' Exhibit 1—Letters patent to Byers, No. 673,419, May 7, 1901	6	4
Plaintiffs' Exhibit 8—Plaintiffs' interrogatories and defendant's answers thereto	15	5
Diagrams	20	8
Testimony of Joseph P. Livermore	22	10
George A. Johnson	59	32
Goodrich Q. Lewis	70	40
Jacob J. Byers	81	47
Edward N. Byers	105	64
John F. McGill	114	70
George W. White	122	76

JUDD & DETWEILER (INC.), PRINTERS, WASHINGTON, D. C., MAY 16, 1917.

	Original.	Print
Testimony of George A. Johnson (recalled)	126	79
Joseph P. Livermore (recalled)	158	100
Frederick Julian	181	114
Plaintiffs' Exhibit 4—Drawing (blue-print sent to B. & M. by Miner in September, 1912)	198	124
11—Letter of December 5, 1899, Byers to N. M. C. Co.	201	125
Copy of letter, December 7, 1899, N. M. C. Co. to Byers	201	125
Letter of December 9, 1899, Byers to Mark	202	125
Copy of letter, December 11, 1899, N. M. C. Co. to Byers	202	126
Letter, December 17, 1899, Byers to N. M. C. Co.	203	126
Letter, December 26, 1899, Byers to N. M. C. Co. (sketch on third page)	204	127
13½—McGill letter	207	126
14—White's sketch, Byers' second model.	208	130
16—Patent Office history of Byers' patent in suit	209	131
Commissioner's certificate	209	131
Application for letters patent	210	131
Report of examiner, May 12, 1900	219	138
Amendments, July 5, 1900	221	139
Report of examiner, August 7, 1900.	223	141
Amendments, September 29, 1900	224	141
Report of examiner, October 14, 1900.	226	143
Amendments, October 16, 1900	227	143
Allowance of patent, October 26, 1900	228	144
Reference to examiner	230	145
Amendments, April 3, 1901	231	145
Notice by chief clerk, April 5, 1901	232	146
Memorandum	233	146
Allowance of improvement, April 13, 1901	234	147
Application of Byers, forming part of patent No. 673,419	235	147
18—Almanac for 1915	240	150
Clerk's certificate to vol. 1	241	151
Clerk's certificate, circuit court of appeals	242	152
Caption to vol. 2	243	153
Answer to amended bill	1	153
Defendant's answers to plaintiffs' interrogatories	6	156
Stipulation of facts	9	158
Testimony of August G. Sandman	10	159
H. L. Trimyer	32	174
W. Scott Wright	52	187
Charles S. Darrach	97	217

	Original.	Print
Testimony of W. H. Emerick	117	229
Delbert H. Decker	140	244
Arthur H. Weston	204	285
Defendant's Exhibit A—W. Scott Wright's sketch	214	292
R—Certified copy of the file of the Emerick patent, introduced by stipulation	215	293
Commissioner's certificate	215	293
File endorsements	216	293
Letter, Brown & Darby to Commissioner, May 22, 1901	217	294
Petition	218	295
Examiner's report, June 29, 1901	226	300
Amendments, July 12, 1901	227	301
Examiner's report, July 26, 1901	232	305
Amendments, August 13, 1901	234	305
Examiner's report, September 5, 1901	240	309
Amendments, October 15, 1901	241	310
Examiner's report, November 2, 1901	244	312
Amendments, December 7, 1901	245	312
Examiner's report, December 24, 1901	246	313
Amendments, December 28, 1901	247	313
Allowance of patent, January 15, 1902	249	315
Letter, Brown & Darby to Commissioner, January 27, 1902	251	316
Application	252	316
Q—Certified copy of the decision of the district court of Illinois, eastern division, in the case of T. H. Symington Co. *vs.* Wm. H. Miner, equity No. 30700	259	321
Letters patent, Perry, No. 228,385, June 1, 1880	262	322
Hinson, No. 635,322, October 24, 1899	266	322
Frost, No. 532,272, January 8, 1895	272	322
Frost, No. 510,854, December 12, 1893	280	322
Reagan, No. 491,785, February 14, 1893	288	322
Simons, No. 627,540, June 27, 1899	294	322
Miner, No. 570,038, October 27, 1896	298	322
Pilcher, No. 616 965, January 3, 1899	306	322
Emerick, No. 693,643, February 18, 1902	318	322
Clerk's certificate to vol. 2	324	323
Clerk's certificate, circuit court of appeals	325	323
Caption to vol. 3	1	325
Memoranda as to pleadings	3	325
Petition for leave to file interrogatories	4	326
Affidavit of William G. McKnight	5	327
Order as to interrogatories	6	328

	Original.	Print
Memorandum as to interrogatories	6	328
Motion to amend bill of complaint	6	328
Motion for costs, &c	7	329
Objections to interrogatories	7	329
Amendments to interrogatories	8	330
Order allowing amendment to complaint	9	331
Memorandum as to defendant's answers, &c	10	331
Memorandum as to answer to amended bill	10	331
Petition as to taking testimony	10	331
Orders as to proof	11	332
Petition to amend answer	13	334
Memorandum as to amended answer	13	334
Final decree	14	334
Opinion, Hale, J	15	335
Petition for appeal	25	342
Assignment of errors	25	343
Bond on appeal	26	343
Præcipe as to record	27	344
Stipulation as to exhibits	29	345
Citation and service	30	346
Clerk's certificate	31	347
Order of enlargement of time for docketing, &c	32	348
Opinion, Bingham, J	33	348
Petition for rehearing	45	356
Letters patent, Mitchell, 517,146, March 27, 1894	58	3 2
Motion for amendment of decree	63	364
Opinion *per curiam*	69	366
Final decree	71	367
Order granting leave to file motion to amend decree	71	368
Order denying petition for rehearing	72	368
Order amending decree	72	368
Motion to stay mandate	73	369
Order staying mandate	73	369
Clerk's certificate	74	370
Writ of certiorari and return	75	370

a Volume I.

United States Circuit Court of Appeals for the First Circuit. October Term, 1915.

No. 1147.

THE NATIONAL MALLEABLE CASTINGS COMPANY et al., Plaintiffs, Appellants,

v.

THE T. H. SYMINGTON COMPANY, Defendant, Appellee.

Appeal from the District Court of the United States for the District of Maine, from final decree (Hale, *J.*), May 24, 1915.

Certified Copy of Record and all proceedings in said cause to and including July 1, 1915.

1 District Court of the United States, District of Maine.

In Equity. No. 705.

On Patent No. 673,419.

THE NATIONAL MALLEABLE CASTINGS COMPANY and JACOB J. BYERS, Plaintiffs,

vs.

THE T. H. SYMINGTON COMPANY, Defendant.

Bill of Complaint as Amended April 20, 1914.

The plaintiffs for their bill of complaint allege:

First. That Jacob J. Byers is a citizen of the United States and of the State of Illinois, residing in the city of Chicago, in said State, and that The National Malleable Castings Company is a corporation duly organized and existing under the laws of the State of Ohio, and a citizen of said State, having its principal place of business in the city of Cleveland, County of Cuyahoga, State of Ohio; and that on information and belief the above-named defendant, The T. H. Symington Company, is a corporation organized and existing under the laws of the State of Maine, and a citizen of said State.

Second. That, as your orators are informed and believe, on the 21st day of April, 1900, Jacob J. Byers, being, within the meaning of the Statutes of the United States then in force, the inventor of certain improvements in Draft Rigging, and being entitled to a

patent thereon under the provisions of said Statutes, duly
2 filed in the United States Patent Office an application for Letters Patent for said invention, and, on the 7th day of May, 1901, all of the requirements of the Statutes of the United States then in force having been duly complied with, Letters Patent of the United States, numbered 673,419, were duly issued on said application to Jacob J. Byers, assignor of an one-half interest to The National Malleable Castings Company, which said Letters Patent, or a certified copy thereof, your orators will produce as this Court shall direct.

Third. That the plaintiffs are now and were, during the period of infringement herein complained of, the owners of said Letters Patent No. 673,419.

Fourth. That, as your orators are informed and believe, the defendant has infringed said Letters Patent, and particularly claims 1, 2, 3, 5, 6, 7, 8 and 10 thereof, and threatens to continue so to infringe, and as an example of infringement the plaintiffs allege that since the issuance of said Letters Patent the defendant has wrongfully and without license or consent of the plaintiffs manufactured and sold, or contracted to sell, Draft Riggings or essential parts thereof embodying, or intended and designed to be used with other parts to embody, the invention set forth in said Letters Patent, particular reference being made to a contract to deliver certain Draft Riggings to The Pressed Steel Car Company for use on cars for the Boston & Maine Railroad.

Fifth. That the plaintiffs have caused to be affixed to all draft rigging manufactured by it under said Letters Patent the word "Patented," together with the date of the issuance of said Letters Patent, and that the defendant has profited by its infringement and the plaintiffs have been damaged thereby.

The plaintiffs therefore pray:

1. For an injunction, and a preliminary injunction pend-
3–5 ing this suit, restraining the defendant, its servants and agents from infringing the said Letters Patent.

2. For costs and an account of profits and damages, and that any

3. For such other and further relief as the circumstances of the damages assessed may be tripled.
case may require.

THE NATIONAL MALLEABLE
CASTINGS COMPANY,
By HENRY F. POPE, *President.*
JACOB J. BYERS.

CHARLES NEAVE,
Solicitor and of Counsel,
5 Nassau Street, New York City.

STATE OF OHIO,
County of Cuyahoga, ss:

On this 25th day of October, 1913, before me personally came Henry F. Pope, who, being by me duly sworn, deposed and said that he is the President of The National Malleable Castings Company, one of the plaintiffs herein; that he has read the foregoing bill of complaint; that the statements therein contained are true of his own knowledge, except so far as they are alleged to be stated on information and belief, as to which statements he believes them to be true, and he stated that he has signed and acknowledged the bill of complaint as President of said The National Malleable Castings Company, and by virtue of the authority vested in him by the Board of Directors of said Company, and that the plaintiffs' title to said Letters Patent is as set forth therein.

[SEAL.] HENRY F. POPE.

Sworn to before me this 25th day of October, 1913.

HARRY E. ORR,
Notary Public.

(Here follow diagrams marked pages 6, 8, 10, 12, and 14.)

No. 673,419. Patented May 7, 1901.

J. J. BYERS.

DRAFT RIGGING.

(Application filed Apr. 21, 1900.)

(No Model.) 4 Sheets—Sheet 1.

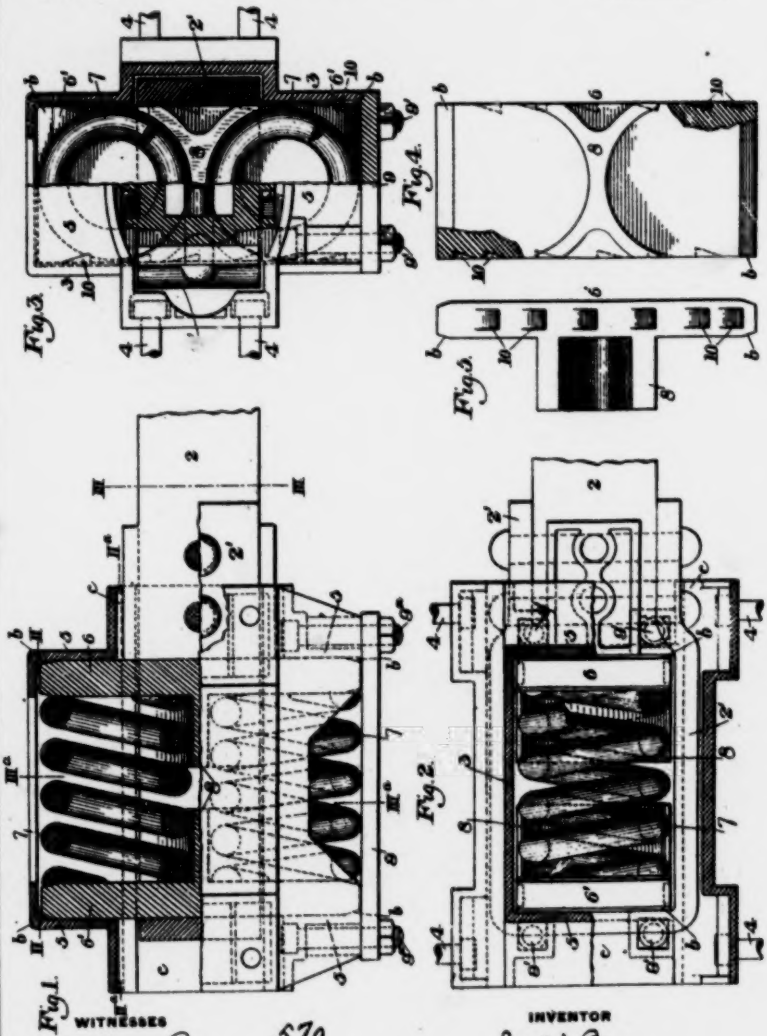

WITNESSES

L. A. Connery

Warren W. Swartz

570

Symington Co.
&
Nat. Mal. Casting Co.
} p 6

INVENTOR

Jacob J. Byers
by Bakewell & Bakewell
his Attorneys.

No. 673,419. Patented May 7, 1901.

J. J. BYERS.

DRAFT RIGGING.

(Application filed Apr. 21, 1900.)

(No Model.) 4 Sheets—Sheet 2.

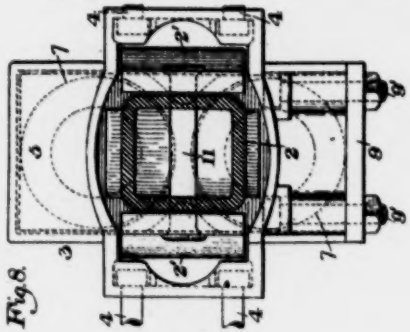

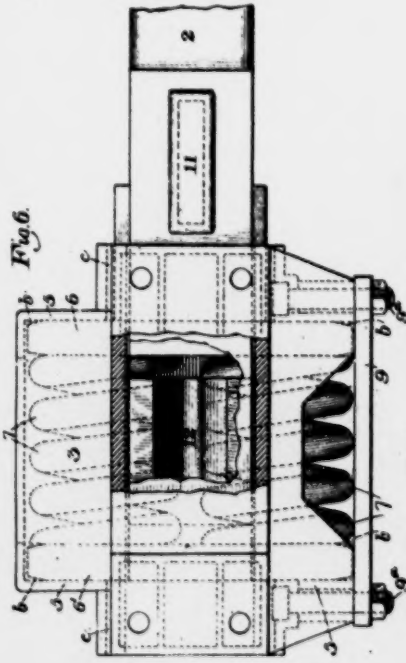

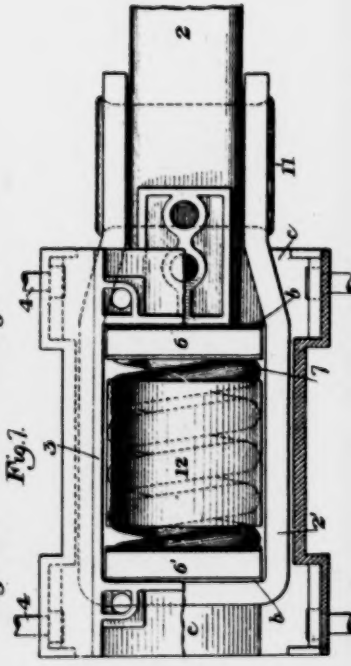

WITNESSES

L. A. Connery Jr.
Warren W. Swartz

570

Symmington Co. & Nat. Mal. Cast. Co. } $8

INVENTOR

Jacob J. Byers
by Baxewell & Baxewell
his Attorneys.

No. 673,419. Patented May 7, 1901.

J. J. BYERS.

DRAFT RIGGING.

(Application filed Apr. 21, 1900.)

(No Model.) 4 Sheets—Sheet 3.

Fig. 10.

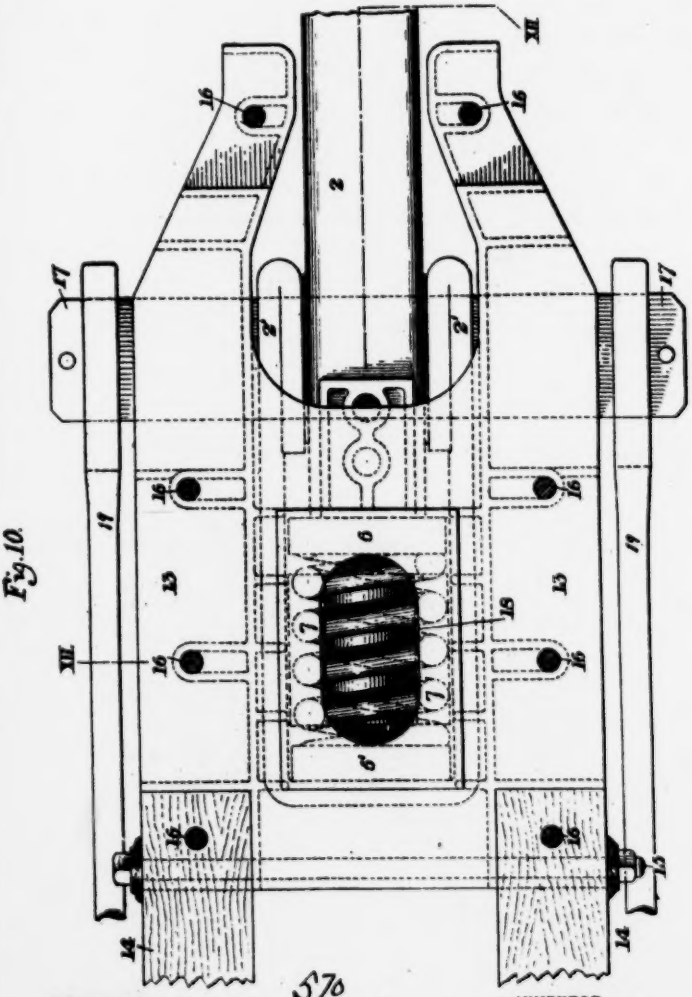

WITNESSES

L. A. Conner Jr.

Warren W. Swartz

570.

Symington Co
&
Nat Mal Cast Co } P10

INVENTOR

Jacob J. Byers
by Baxewell & Baxewell
his Attorneys.

No. 673,419 Patented May 7, 1901.

J. J. BYERS.

DRAFT RIGGING.

(Application filed Apr. 21, 1900.)

(No Model.) 4 Sheets—Sheet 4.

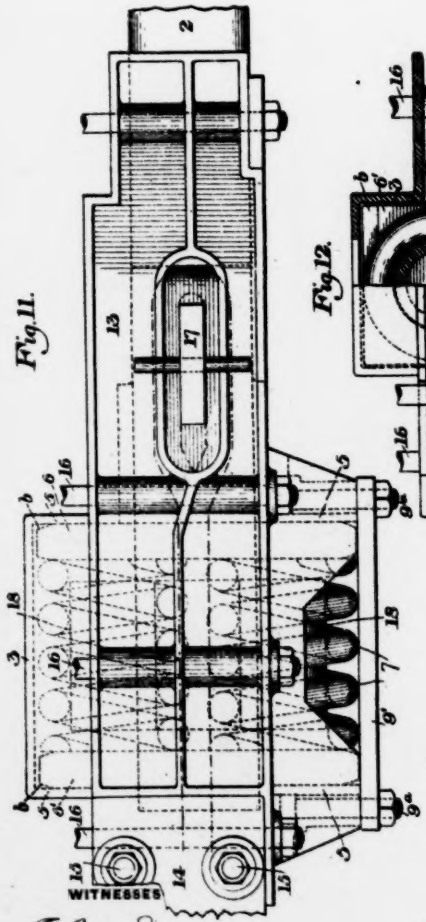

Fig. 11.

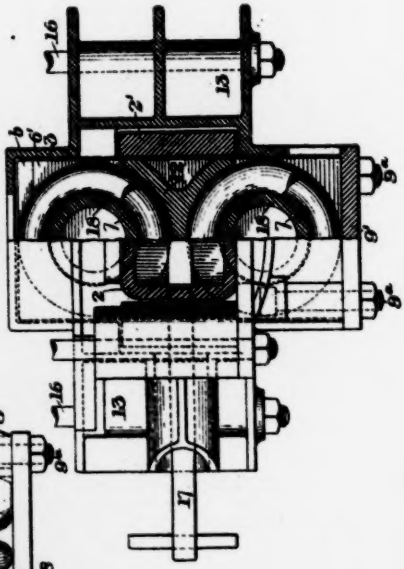

Fig. 12.

570
Symington Co
v
Nat Mal Cast Co } 712

WITNESSES

INVENTOR

Joseph J. Byers
by Bakewell & Bakewell
his Attorneys.

UNITED STATES PATENT OFFICE.

JACOB J. BYERS, OF CAMERON, MISSOURI, ASSIGNOR OF ONE-HALF TO THE NATIONAL MALLEABLE CASTINGS COMPANY, OF CLEVELAND, OHIO.

DRAFT-RIGGING.

SPECIFICATION forming part of Letters Patent No. 673,410, dated May 7, 1901.

Application filed April 21, 1900. Serial No. 13,744. (No model.)

To all whom it may concern:

Be it known that I, JACOB J. BYERS, of Cameron, in the county of Clinton and State of Missouri, have invented a new and useful Improvement in Draft-Riggings, of which the following is a full, clear, and exact description, reference being had to the accompanying drawings, forming part of this specification, in which—

Figure 1 is a side elevation showing the upper part of the figure in central longitudinal section. Fig. 2 is a sectional plan view on the lines II II and II[a] II[a] of Fig. 1. Fig. 3 is an end view, the left-hand portion of which is in vertical section on the line III III and the remainder in vertical section on the line III[a] III[a]. Fig. 4 is an elevation of the inner side of the follower. Fig. 5 is a side view of the follower. Fig. 6 is a side elevation of a modified construction. Fig. 7 is a bottom plan view of Fig. 6, partly in section and showing the bottom plate removed. Fig. 8 is an end elevation showing the draw-bar shank in section. Fig. 9 is an end view of the stop. Fig. 10 is a top plan view of a modified construction, showing the draft-arms integral with the part of the rigging which contains the springs. Fig. 11 is a side elevation of Fig. 10. Fig. 12 is a cross-section on the line XII XII of Fig. 10.

In Figs. 1, 2, and 3, 2 represents the shank of a draw-bar, and 3 represents a pocket which contains the springs of the draft-rigging and is set between draft-timbers, (not shown,) to which it is affixed by bolts 4 4. The pocket may be cast in a single piece and is provided with horizontal lugs 5 5, which extend across the pocket, above and below, and constitute abutments for the followers 6 6', which are set in the pocket. The pocket and lugs are suitably braced by metal ribs or flanges, as shown. 7 7' are the springs, placed, preferably, one above the other between the followers, and to hold them in place, as well as to limit the approach of the followers, I may provide the latter with projecting stops 8, which extend from such followers between the springs. The draw-bar shank 2 is connected with the rear follower 6' by a yoke 2', which is fixed to the draw-bar by riveting or otherwise and extends within the pocket, between the lugs and around the rear follower, as shown. The pocket is open at the bottom, so that the follower-plates and springs may be removed freely from within the yoke in a vertical direction without the necessity of disengaging the yoke from the draw-bar, since the follower-plates are not connected with the draw-bar otherwise than by being placed between the sides of the yoke. This removal is made possible by taking off a cap-plate 9, which closes the opening at the bottom of the pocket and is secured by bolts 9[a], and the follower-plates can then be pried out by means of a tool applied to toothed recesses 10, formed in the edges of the follower-plates. To facilitate the insertion of the follower-plates and springs, I prefer to bevel the ends of the follower-plates, as shown at *b b*. The pocket is preferably made alike at both ends, as shown in Figs. 1 to 3, with an opening *c* at each end for the passage of the draw-bar shank, so that it is reversible and can be turned in either direction.

In the figures on the second sheet of the drawings I show modifications of my invention, in which the draw-bar shank is attached to the yoke 2' by a rivet-key 11, which may be passed through the transverse slot ordinarily formed in draw-bars for the attachment of the so-called "American" continuous draft-rods and through slots in the arms of the yoke and is upset at the ends, as shown. In these figures also I show a stop-piece 12, made separate from the follower-plates and interposed between the springs, performing the same function as is performed by the projections from the follower-plates shown in Figs. 1 and 4.

In Figs. 10 to 12, on the third and fourth sheets of the drawings, I show my improvement applied to use with the American continuous system, in which the draw-bars at the opposite ends of the car are connected by transverse keys and longitudinal rods; and to this construction I intend to make specific claim in addition to my generic claims. In these figures I show the rigging provided with metal draft-arms 13, which may be cast integrally with each other and with the pocket above described and which are abutted against the ends of the draft-timbers 14, of

which they form a continuation and to which they are secured by bolts 15. The draft-arms are also secured to the sills above by bolts 16 and may be connected at the top and bottom as well as at the rear by integral webs or plates, it being necessary only to leave an opening at the bottom, through which the springs and followers may be removed, and to close said opening by a removable plate or cap 9'. The draw-bar is connected to the arms of the yoke by a key 17, which extends through the usual slot in the draw-bar, through slots in the arms of the yoke, which are preferably doubled, so as to give a better bearing for the key, and through slots in the draft-arms and is adapted to be connected with the draft-rods 19 of the continuous system. In addition to the stop 12 which I show in these figures I also show as an alternate construction stops 18, either hollow or solid, which may be set axially in the springs between the follower-plates. The draft-arms shown in these figures are preferably strengthened by flanges at the sides and constitute a strong and very desirable construction.

The advantages of my invention will be appreciated by those skilled in the art. The springs arranged one above the other, the pocket having horizontal lugs or abutments for the followers, the free removability of the springs and the followers from below from between the arms of the yoke and from the pocket, and the construction of the draft-arms shown in Fig. 10, together with the other items mentioned in the claims, constitute, severally and in combination, important parts of my invention.

I claim—

1. A draft-rigging having in combination with the draw-bar, a yoke, the arms of which are connected to the sides of the draw-bar, springs arranged one above the other within the yoke, and followers also arranged between the arms of the yoke, said springs and followers being removable from below, independently of the draw-bar; substantially as described.

2. A draft-rigging having a yoke, the arms of which are adapted to be connected to the sides of a draw-bar, springs arranged one above the other between the arms of the yoke, and followers adapted to fit against the ends of both springs, and also contained between the ends of the yoke, said springs and followers being removable from below independently of the draw-bar; substantially as described.

3. A draft-rigging having a pocket, lugs, extending horizontally across the pocket at the upper and lower portions thereof respectively, followers within the pocket which bear against the lugs, and a yoke which extends within the pocket between the lugs and around the rear follower; substantially as described.

4. A draft-rigging having a pocket, lugs extending horizontally across the pocket at the upper and lower portions thereof respectively, followers within the pocket which bear against the lugs, a yoke which extends within the pocket between the lugs and around the rear follower, and braces connected with the lugs and pocket; substantially as described.

5. A draft-rigging having a yoke open at the bottom and having a spring and followers arranged between the arms of the yoke, and a pocket within which the yoke extends and which is also open at the bottom to permit removal of the spring and followers independently of the draw-bar; substantially as described.

6. A draft-rigging having a yoke open at the bottom and having a spring and followers arranged between the arms of the yoke, a pocket which contains the yoke and is also open at the bottom to permit removal of the spring and followers, and a detachable closure for the opening in the pocket; substantially as described.

7. A draft-rigging having, in combination with the draw-bar and spring mechanism, a yoke the arms of which are connected to the sides of the draw-bar, a pocket within which the yoke extends, and a key which extends horizontally through the draw-bar and yoke, and through slots in the walls of the pocket; substantially as described.

8. A draft-rigging having springs set one above the other, and a follower engaging the ends of both springs and having at the middle a stop projection which separates the springs; substantially as described.

9. A draft-rigging having springs set vertically one above the other, and a single pocket having at opposite ends horizontal lugs at the top and bottom of the pockets, followers in the pocket set between the lugs, and adapted to receive a spring between them; and a yoke which extends within the pocket between the lugs; substantially as described.

10. A draft-rigging having springs arranged vertically, one above the other, followers, a yoke between the sides of which the springs and followers are set, said springs and followers being removable vertically from below independently of the draw-bar; substantially as described.

In testimony whereof I have hereunto set my hand this 6th day of April, 1900.

JACOB J. BYERS.

Witnesses:
WILL H. BROWN,
JOHN A. LIVINGSTONE.

15 PLAINTIFFS' EXHIBIT No. 8.

District Court of the United States, District of Maine.

In Equity. No. 705.

On Patent No. 673,419.

THE NATIONAL MALLEABLE CASTINGS COMPANY and JACOB J. BYERS, Plaintiffs,

vs.

THE T. H. SYMINGTON COMPANY, Defendant.

Interrogatories and Answers.

Plaintiffs' Interrogatories and Answers under Oath by T. H. Symington, President of the Defendant Corporation.

Interrogatory No. 1.

Did the defendant company during 1913 and prior to the filing of the bill herein, sell or contract to sell to the Pressed Steel Car Company, for installation on railway cars of the Boston & Maine Railroad, side castings for draft riggings intended to be attached to the draft sills of a car, similar to those marked by the letter "A" in the attached blue print?

Interrogatory No. 2.

Did the defendant company during 1913 and prior to the filing of the bill herein, sell or contract to sell to the Pressed Steel Car Company, for installation on railway cars of the Boston & Maine Railroad, spacer blocks for draft riggings, similar to those marked "B" in the attached blue print?

16 Answers to Interrogatories Nos. 1 and 2.

The T. H. Symington Company did not, during the period named, sell, for installation on the Boston & Maine Railroad, any cheek castings or spacer blocks resembling those shown in the blue print annexed to the interrogatories. It did, during August, 1913, agree to furnish to the Pressed Steel Car Company, cheek castings and spacer blocks which I understand were for application to certain center constructions which that company was bidding on for the Boston & Maine Railroad. The parts referred to are illustrated in the blue prints annexed hereto, marked Card G-34 and Card F-1653. These parts correspond to the side or cheek castings and spacer blocks, marked "A" and "B" in the drawing annexed to the interrogatories. No payment for these parts was received nor were any of them delivered.

Interrogatory No. 3.

Did the defendant company during 1913 and prior to the filing of the bill herein, sell or contract to sell to the Pressed Steel Car Company, for installation on railway cars of the Boston & Maine Railroad, draft rigging parts in addition to those marked "A" and "B" in the attached blue print, and if so, what were such parts?

Answer to Interrogatory No. 3.

It did not.

Interrogatory No. 4.

Was the defendant company during 1913 and prior to the filing of the bill herein, supplied with a blue print or drawing by the Pressed Steel Car Company or the Boston & Maine Railroad or by both of said companies, similar to the attached blue print, for the purpose of obtaining bids with regard to the draft rigging parts "A" and "B" marked thereon, or any other draft rigging parts shown thereon, or for the purpose of furnishing draft rigging parts similar to the parts "A" and "B" marked thereon, or any other parts,
17 for the Pressed Steel Car Company for installation on railroad cars for the Boston & Maine Railroad?

Answer to Interrogatory No. 4.

The defendant, The T. H. Symington Company, did during the period named, receive a blue print which I believe originated with the Boston & Maine Railroad Company to be used as a basis for bids for cheek castings and spacer blocks for draft gears, which parts correspond to the side or cheek castings and spacer blocks marked "A" and "B" in the drawing annexed to the interrogatories.

Interrogatory No. 5.

Did the Pressed Steel Car Company during the year 1913 and prior to the filing of the bill herein, make an inquiry directed to the defendant, asking them for bids on draft rigging parts intended to be installed on cars for the Boston and Maine Railroad Company? If so, please produce such inquiry and any accompanying papers, such as blue prints or drawings showing the construction to which the inquiry related.

Answer to Interrogatory No. 5.

The business which we did with the Pressed Steel Car Company was solicited personally by one of our representatives and these negotiations were not in writing. A blue print, referred to in the previous answer, which I believe originated with the Boston & Maine Railroad Company, was submitted to us and is hereto attached.

Interrogatory No. 6.

Were the draft rigging parts sold or contracted to be sold by defendant during the year 1913 and prior to the filing of the bill herein to the Pressed Steel Car Company for installation on cars of the Boston & Maine Railroad intended to be assembled and used in the manner shown in the attached blue print?

18 Answer to Interrogatory No. 6.

As stated in the answer to the first interrogatory, we made no such sale during the period specified. The draft rigging parts, namely cheek plates and spacer blocks, which we agreed to furnish, while they were capable of being otherwise utilized, could be assembled in accordance with the blue print attached to the interrogatories and are preferably so assembled, as thus assembled, they form a structure in exact accordance with the U. S. Patent to Emerick, No. 693,643, which is the property of the defendant in this case, but the parts referred to were never during the period named, put into actual use in the patented combination covered by any of the claims of the patent in suit.

Interrogatory No. 7.

Did the Pressed Steel Car Company, during the year 1913 and prior to the filing of the bill herein, furnish the defendant with any drawing or blue print showing the construction of the castings or parts which defendant contracted to sell to the Pressed Steel Car Company for installation on cars of the Boston & Maine Railroad? If so, please produce such drawing or blue print.

Answer to Interrogatory No. 7.

A blue print was submitted to our company during the period named, as a basis for bids for draft gear parts to be installed on the cars of the Boston & Maine Railroad Company. There was no writing, no deposit and no delivery. The annexed print 11841-C, is a duplicate of this.

Interrogatory No. 8.

Did the Pressed Steel Car Company, during the year 1913 and prior to the filing of the bill herein, send to defendant specifications describing the draft rigging parts to be manufatcured and sold by defendant to the Pressed Steel Car Company and intended to be installed upon cars of the Boston & Maine Railroad? If so,
19 please produce such specifications and any drawings or blue prints accompanying same and showing the construction to which the specifications related.

Answer to Interrogatory No. 8.

The defendant received no specifications describing the cheek plates and spacer blocks which were the subject of the verbal agree-

ment to which I understand this question relates. The drawing is referred to in answer to interrogatory No. 6.

Interrogatory No. 9.

Did the defendant, The T. H. Symington Company, agree, during the year 1913 and prior to the filing of the bill herein, to hold the Pressed Steel Car Company harmless by reason of any suits filed against the Pressed Steel Car Company regarding the infringment of any patent or patents because of the sale to the Boston & Maine Railroad Company of the draft rigging parts furnished to the Pressed Steel Car Company by the defendant?

Answer to Interrogatory No. 9.

Defendant is instructed by this Court that it need not answer.

(Here follow diagrams marked pages 20 to 20c incl.

21 United States District Court, District of Maine.

In Equity. No. 705.

On Patent No. 673,419.

THE NATIONAL MALLEABLE CASTINGS COMPANY and JACOB J. BYERS, Complainants,

vs.

THE T. H. SYMINGTON COMPANY, Defendant.

January 7, 1915.

Appearances:—

Charles Neave, of New York, George I. Haight, of Chicago, Clarence D. Kerr, of New York, for Complainant.

Benjamin Phillips, of Boston, Edwin F. Samuels, of Baltimore, Howard R. Ives, of Portland, for Defendant.

Report of the Evidence.

The Court: If you will state the stipulations succinctly, the stenographers will take them down.

Mr. Neave: The stipulations between the parties, which stipulations are on file, show that the plaintiff and the defendant corporations are corporations, as alleged in the bill of complainant; that all United States and foreign patents referred to in the case may be proved in evidence, prima facie, by putting in regular printed Patent Office copies; that the various exhibits that were produced during the taking of the testimony out of court, could be retained in possession of the parties until the hearing, which has been done, and the exhibits are all now here.

22 Also, the plaintiff put to the defendant certain interrogatories, and the defendant has answered those interrogatories, from which it appears exactly what it is that the defendant has made and sold, the drawings being attached to the answers to the interrogatories.

The Court: So that you have what you call the offending machine brought before you by those questions and answers?

Mr. Neave: Yes sir.

The Court: And brought into court?

Mr. Neave: Yes, your Honor. Those are on file, but we have here, written out, the interrogatories and answers together, instead of separately, so that they can be the more readily used; there is a copy of the questions and answers; and here are the copies of the blue prints which are attached to and form a part of the defendant's answers.

JOSEPH P. LIVERMORE, called by the Complainants, sworn, testified as follows:

By Mr. Neave: I offer in evidence printed Patent Office copy of the Byers Patent, 673,419.

The Court: Is that this patent in suit?

Mr. Neave: Yes, your Honor; the same is marked Plaintiff's Exhibit 1—the patent in suit.

Q. 1. Mr. Livermore, you are a mechanical expert, I believe, living in Boston, or practising in Boston?

A. Yes, sir.

Q. 2. And you have had occasion many times, for many years, to study various mechanical constructions and appliances, and explain them?

The Court: Do you live in Cambridge or Boston?

A. I reside in Cambridge; my office is in Boston.

Mr. Neave: What was that question?

23 (Last question read.) Have you not?

A. Yes, sir.

Q. 3. Prior to this suit, have you had any experience in connection with car structures?

A. I had some cases with the Pressed Steel Car Co. that related to the construction of cars. I think there were a few cases that I testified in, and quite a number that I was consulted in, and partly prepared to testify. I have also had quite a number of cases relating to car trucks, and, partly, car construction of street cars for the Brill Company; and have had a great deal to do with air brake litigation.

Q. 4. Have you read the Byers Patent here in suit, and have you examined and do you understand the defendant's structure, and do you understand the answers to the interrogatories, and the drawings attached to them?

A. Yes, I do.

Q. 5. Does the small model that I now show you correctly illustrate the Byers structure of the patent in suit; and, if there are any differences as compared with any of the figures in the patent, please state what they are?

A. The model represents one of the constructions shown in the Byers Patent, that shown in figure 3, so far as the main part of the draft rigging is concerned. The model is not exactly like any one figure of the patent throughout, the difference being principally in the connections between the draw bar and yoke. The draw bar and yoke are connected by a removable key, such as is shown in Fig. 10 of the Byers Patent, but the remainder of the construction is——

The Court: The Byers Patent is the patent in suit?

A. Yes, sir. The remainder of the construction is like that shown in Fig. 3.

Mr. Neave: The Plaintiff offers in evidence this model, and it is

marked Plaintiff's Exhibit No. 2, Model of Structures Shown in Byers Patent in Suit.

24 Mr. Phillips: I desire to object to the introduction of this exhibit on the ground that it is absolutely immaterial, not being made in accordance with the patent in suit, and simply tends to confuse the Court.

The Court: I shall admit it for the present, and your objection is noted.

Q. 6. The Byers Patent is entitled as relating to draft rigging. What is draft rigging, and what is the meaning of the terms "draw bar," "draw bar shank," "draft timbers," and "sills," occurring at lines 31, 34 and 48, of page 1 of the specifications; and line 3 of page 2 of the Byers Patent?

A. The draft rigging is the name applied to the entire mechanism or structure that serves to connect the car body with the part that is to pull it; that is, it, of course, connects it with the locomotive,—connects the head car with the locomotive, and the second car with the car in front of that, and so on; the immediate connection between one car and another, or the head car and the locomotive, is by what is called a coupling; that is, there is a part on each car that engages with the other one, to fasten the two coupling members together; now, the coupling is at the end of the draw bar, and the draw bar is simply a long, strong bar, that projects enough at the ends of the car to expose the coupling so it can be connected with the coupling of the adjoining car. That we call the outer end, or draw end, and carries the coupling, or draw head it is sometimes called; and the inner end, of course, has to be connected with the car body in some way, so as to pull the car along. The main part of the draft rigging is what affects this connection between the draw bar and the car body. The connection has to be yielding in ordinary railway construction; that is, the draft rigging effects a yielding connection between the draw bar and the car body, and this yielding connection is by springs, commonly compression spiral springs, and the rigging is so introduced that that compression works either way; that is, the compression of the springs cushions the pull

25 of the draw bar from the car body, what are called draft strains, in pulling; and it also cushions the movement of the draw bar toward the car body, in pushing, or when cars come together; those are called the buff strains; that is, the bumping of the two cars together is called "buffing." And this same spring is interposed between the draw bar and the car body in such a way that it yields to buff strains, and also yields to the draft strains.

The Court: Whenever you want to show that to me,—I do not get it much into my mind yet.

Mr. Neave: This is merely preliminary; it is a definition of the terms.

Witness: It is merely definition.

Mr. Neave: So that you can see what it is applied to.

The Court: All right; I see. Go on.

A. The difference between the coupler and draw bar—it is simply the bar that is connected with the next car, and is connected in some way with the car body. Now, the draft timbers are a pair of longitudinal timbers or beams, under the body of the car, and very securely fastened to the main framework of the car—long timbers like these (indicating on model); the whole framework of the car is fastened solidly to those, and it is those draft timbers that the main part of the draft rigging is connected with, so that the pull of the draw bar against the springs gets to those draft timbers, and they carry along the car with them. The draw bar shank is simply the name—it is practically the draw bar itself, or the main part of it, between the draw head, where the coupling is, and the attachment to the rear end. The sills—that is used in the same sense that it is in architecture, at house building. It is simply the main timbers at the bottom of the car, on which the whole framework of the car is erected. There are end sills—that is, the general framework of the car is a longitudinal frame.

The Court: Those? (Indicating on model.)

26 A. Yes; they sometimes call those draft rigging sills, or draft sills.

The Court: Is that a part of the sill? (Indicating.)

A. It might be, and I think that probably represents a part of the end sill of the car, which goes clear across. As I say, the general framework is rectangular, with two heavy end sills and two side sills, and usually a pair of center sills; and in some cases, in steel construction, the center sills are deep, and the draft rigging is mounted right in them, so that the center sills and draft rigging sills are practically the same thing; but in some of the old wooden construction the center sills run along the bottom of the car, and the draft sills run under the center sills, from the end of the car back to about the truck, and they simply make that part of the center sills deeper, for the attachment of the draft rigging. I think those are all the terms.

Q. 7. Now, will you describe the construction and operation of the draft rigging shown in the Byers Patent in suit, referring to the drawings of the patent; and, if you desire, to the model that has been put in evidence?

Mr. Phillips: What is the question please?

Mr. Neave: To describe the structure and operation of the Byers Patent.

Q. 8. Describe the patent?

A. As I stated before, the essential part of the draft rigging construction is a provision for interposing a spring action between the draw bar and the car body—we will say between the draft sills, because they are the fixed part of the car body, to which the draft rigging is directly connected, those springs (indicating on model) working to cushion the action, in either direction. When that is pulled (illustrating with model), it pulls against the springs; and,

when it is pushed, it goes against the spring action. It is
27 a very simple and ingenious construction, by which you get one spring to work both ways, work under compression, both against a pulling strain and a pushing strain; but it is rather hard to explain how that construction is made. The draw bar in the Byers construction is connected with a part that is called a yoke.

The Court: What do you call the yoke?

A. The yoke is the part which is marked 2', in Fig. 7.

The Court: Figure 7?

A. Yes. I am trying to see if there is any better view there. I rather think Figure 7 shows that about the best (indicating to Court). 2 is the draw bar shank.

The Court: "2" is the draw bar shank?

A. Shank. That is the main part that comes back from the coupler.

The Court: And what is 2'?

A. 2' is this yoke which is in there (indicating).

The Court: What do you call the yoke?

A. That is this U-shaped strap. Sometimes it is called a stirrup. (Indicating to Court.)

The Court: That is the yoke (indicating)?

A. Yes. The yoke is fastened to the draw bar shank. It might be even riveted to it. It is shown riveted to it in Figures 1 and 2,—that the yoke is riveted to the draw bar shank. Those are rivets (indicating) that go right through. Of course, where rivets are used, it cannot be taken apart very easily.

The Court: What is that yoke, metallic?

28 A. Yes; a long iron or steel strap. It shows in these structures here (indicating). It is just a U-shaped structure which comes around there (indicating on model).

The Court: Yes.

A. Another way of fastening, shown in Figure 7, is by a long, flat key, a piece that is run through here (indicating), an elongated hole in the shank, and in the two ends of the yoke; and that is shown as headed over or riveted to keep it from coming out. Now, on Figure 10 there is a key, 17; that is just a flat bar, 17, this one here (indicating to the Court); and that runs across through a flat hole in the end of the yoke. That is the yoke there (indicating). That is the yoke; and a hole in the end of the draw bar shank; that is it (indicating). So that, in all these cases, the yoke is fastened to the end of the draw bar, and with it makes one continuous piece, with a rectangular opening between the two sides of the yoke.

The Court: What is it; what is its function? You will come to that?

A. Yes. We have got now the draw bar, and yoke fastened to it, and making a space,—a rectangular space between the rear end of the draw bar and the back strap of the yoke, and the two side straps of the yoke.

The Court: What are these straps? (indicating.)

A. Yes, kind of straps; side arms, they are called.

The Court: The sills of the car rest on that?

A. No, that has nothing to do with supporting; that is simply the pulling and pushing arrangement.

The Court: I was getting at how it was related to the car.

A. Well, we are coming to that later. Now, in that
29 rectangular opening, that is, in this entire draw bar construction, the draw bar and yoke practically make one moving structure, you see (indicating). And in that rectangular opening is placed the spring, which is a spiral expansion spring, the ends of which bear one against the back end of the yoke and the other against the back end of the draw bar.

The Court: There? (Indicating.)

A. That is the spring, yes. The springs do not, however, bear directly against the back end of the yoke, and the back end of the draw bar, but there are interposed bearing plates called "flat followers." They simply make a broad foot for the spring to rest on, so as to transmit the force. (Court indicates.) Yes, that is it. The followers are marked "6." They make a sort of broad foot. So now the spring, if it is under a little compression—it is not under very much in that condition (indicating), but such as it is, it is simply pressing back and forth, in this hole or opening in the draw bar. The draw bar and connected yoke, of course it does not do anything to them, because it pushes back just as much as it pushes forward, now, as far as that is concerned (illustrating). The ends of the followers, however, stick out from the sides of the yoke, up and down, it is, in this construction. Figure 6, perhaps, shows the way, the followers go clear from the top to the bottom, in Figure 6, and the yoke is only so high (indicating); it covers about a third, the middle third, say, of the followers, leaving one-third sticking out at one end, and the other at the other end, and the other follower the same. Now, if the projecting pieces of the followers bear against shoulders or projections of some kind, fixed to the car body, why, those shoulders will make an abutment, against which the spring can act. Such shoulder bears against the rear side of the rear follower, and the front side of the front follower. That prevents the rear follower from moving backward relative to the car, and if you give a backward shove
30 or bump against the end of the draw bar, that will push against the front follower, and the front end of the spring, and the back follower will hold the rear end of the spring, so you will have pushing against the spring, and the spring will be interposed in that way between the draw bar and the car, which is bearing against the rear follower.

The Court: And the same is true of the other——

A. And the same is true the other way—of the pull.

The Court: The spring is made to move either way?

A. Either way. It cushions either a pull or a push. So you have got to have besides the draw bar, yoke, and spring, that we have described, so far, you have got to have some kind of stop shoulders rigidly connected with the car, or with the draft sills, so as to

make the abutments for these followers, against which the spring acts. In the Byers construction those abutments or stop projections for the followers are made in a casting; the whole casting is sometimes called a pocket, or it is a casting having a pocket, the pocket being simply the space in which these parts we have been describing are contained.

The Court: The springs are arranged one above the other?

A. Yes, they are vertical; that is the way it stands (indicating). I have only described, so far, just the general character of a coupling, not really coming to the special arrangement of the Byers; and Byers has two springs, instead of a single one—what is called a twin spring arrangement, two springs interposed between these followers, or follower plates (indicating.) They are one above the other.

The Court: Looking down?

A. Yes, Figure 7; that is looking down upon the car, or
31 up; it is either up or down, it doesn't make any difference; I think that is probably up from the bottom (indicating). This main casting, pocket casting, has an abutment, shoulders, or stop projections, against which the end of the followers bear, to transmit the force from the spring to the car body. These parts are arranged in the Byers Patent, largely with reference to ease of taking them apart and putting them together, and one feature of that arrangement is that the yoke is in what is commonly called a horizontal position; that is, the two arms, the two side arms of the yoke, are side by side, in a horizontal plane,—the two side arms of the yoke (indicating). Those stand in a horizontal position, like that (indicating).

The Court: I see.

A. And not vertical like that (indicating). It is a little difficult to use the terms horizontal and vertical, because you do not know exactly what you are referring to, but when you say horizontal, it means that the two arms are side by side in a horizontal plane, instead of one over the other. Now having the yoke horizontal, of course, involves that the follower plates, which are pushed through this opening in the yoke, are vertical, and the protecting ends of those, that project outside of the space between the yoke and the draw bar, are above and below the yoke; that is, they project up from the upper edge of the yoke, and down from the lower edge; and that means that the projections in the main stop casting, or what I have called pocket casting, sometimes pocket, or horizontal; that is, they stand cross-wise from side to side, above and below the yoke, so as to engage the ends of the followers that project above and below the yoke. Of course, the lengthwise distance between the stop projections at the front and rear is just equal to the lengthwise distance between the two outer surfaces of the followers, when they are held in the
32 space between the yoke and the draw bar. Consequently, there would be room between these projections, these horizontal stop projections to insert the followers; if there was an opportunity to do it—the followers and springs between them. This

stop casting that has the stop projections above and below the yoke, is composed mainly of two side members that extend along the——

The Court: Are you talking about the followers?

A. No, I am talking about the main pocket casting, (indicating on drawing). Now, that has two side portions,—they show in Figure 8, there, as well as anywhere, that extend along, this side here, and this side here (indicating), and that extend along the draft sills, and are arranged to be bolted securely to the draft sills.

The Court: And where are they?

A. Well, it is just this side (indicating)—it is just a hollow casting, or hollow box.

The Court: I see what you mean.

A. And the two sides of the box are vertical sides, that practically lie on the inside of the——

The Court: Within the yoke?

A. Of the draft sills.

The Court: Within the yoke?

A. No, the yoke is inside of those.

The Court: The yoke is inside of those?

A. The yoke is inside of those. Now, they have on their inner surface,—on their inner side they have a groove or guideway, that accommodates the yoke.

The Court: Is that the yoke? (Indicating.)

A. That is the end of the yoke, yes; that is the rear end
33 of the yoke. And if you will look at Figure 3 you will see —that is a section of the yoke.

The Court: I do not get that in my mind.

A. Now, that side, that is a section of the yoke, which lies in a sort of groove, which makes a guideway for it, in that side wall of the pocket. I am referring now to this wall of the pocket, this whole wall here (indicating), which has a groove in it, in which the yoke lies. That is all.

The Court: I thought you said the other way. It is, then, the whole side?

A. Yes. I thought you asked me about something that was inside of the yoke. I have not gotten to that. Now, by having those side walls vertical, and having the yoke horizontal, there is left a complete vertical opening, right up and down; this, really, is the bottom (indicating).

The Court: I understand.

A. —through which the springs and followers can be introduced or removed. You see, those can be taken out (indicating), right from underneath there, without disconnecting the yoke from the draw-bar, at all. That is the part (indicating) which holds the springs and followers apart. And it can be put back with the reverse operation. Now, at the bottom of that space there is a removable cover, marked "9," in Figure 6 and Figure 8.

The Court: Figure 6.

A. That is just a bottom plate, that is—an ordinary box cover that is bolted on to the bottom of that opening; so when that is

bolted on, of course those cannot come out; but if you want to get them out, if a spring is broken and wants to be replaced, you take the bottom cover off, and those can be forced right
34 down through, and a new spring put in. That is just the bottom plate (indicating). And put back in the same way; and that is all that has to be disturbed about it. Now, there is another feature; I think I have mentioned it, but I have not spoken of it especially, and that is that there are a pair of springs, between the two followers, and these are arranged one above the other so that they are in this same vertical pocket, or space, with the followers.

The Court: There you are looking at the side of it (indicating)?

A. Yes.

The Court: And there you are looking down? (Indicating).

A. No; that is looking at the end of it, the rear end.

The Court: Yes, that is looking at the rear end (indicating).

A. Yes. That is looking downward (indicating).

The Court: One of them?

A. Yes; you only see one, of course, when you look from the top or bottom. Now, there is one other matter; of course, when the spring is strained, compressed either by a pull or a push, the two followers move toward one another; that is, one of them moves towards the one that is——

(The Court indicates.)

A. Yes; there is always one moving towards the other.

The Court: Toward the other?

A. Yes; they both cannot act at the same time. You see, that starts forward toward that, or that toward this (indicating),
35 but they cannot come together; and to prevent the springs coming chock-a-block as they call it, the guards coming right against each other, there is just a limit to the motion, as they come together; of course, you take a spring, and as you bring it together the coils finally bear against one another, and close up these spaces (indicating), you see, and that makes a solid thing; and usually they want to stop the compression before it gets to that point, that is, they do not want to have so long a movement, and consequently, in one construction these followers, follower plates,—you see, in Figure 5, perhaps, best—Figure 5 is an edge view of one of the follower plates (indicating). Figure 5 is simply an edge view of one of the follower plates, the springs bearing against it. That is simply that edge. It is beveled off at the top and bottom, that edge, and those are the little recesses, cut in that,—filed out; not involved, I think; it happens to show that. Now, in that construction there is a projection, a kind of double half-moon shaped thing, out from the face of one of those followers; that sticks out from there, and lies in between the two springs. It is just as if that piece were made a part of this,—sticks out from it. Now, it is as if this piece here in the model were cut in two in the middle, and half of it made into one follower and the other half into the other follower. Cut that in two—you have to fasten one side to that

and the other side to this, you would have the construction as shown in Figures 4 and 5. Number 4 is the opening at that end (indicating). Now, those two projections stick out towards one another.

The Court: What do you call that? (Indicating.)

A. They stick out towards each other, but with a space—they don't reach all the way across between the follower plates when the springs are expanded, so that there is a space left between. That is between there to there (indicating), and that space is simply the amount that one follower plate can move towards the
36 other. That is, that limits the amount of the yielding spring action either way. That is, if you are pushing back on the front follower plate, the springs yield until the end of that projection, 8, brings up on the other one, and then you are solid. You are then pushing them solid against the end of the car, and then you have a rigid connection. You have taken up all the spring action there is. Now, there is an alternative construction, instead of having those limiting projections.

The Court: What do you call limiting projections?

A. That is it; they limit the movement. Instead of having those cast on the two follower plates, one on each, they have a separate piece, and that is shown on Figure 9, and that you see is that (indicating). Now, that is simply a separate loose plate. I should call it a limiting stop. I have forgotten what the patent calls it. "Stop projections" is what they call it. They have so many stops; I call it stop projections. It simply limits the amount of compression of the springs. One construction is where that stop projection is made half into this, and the other half into this (indicating). This is a sort of movement and hasn't that piece put on this one, and the other piece put on this. It doesn't make any difference; leaves just the same space. That has nothing to do with this. Now, I think I have described all there is to this.

The Court: You think you have described all the parts that are referred to, for instance, in claim 1, and shown its working and instrumentality?

A. Yes, I think so. Now, if there is no objection to just going over Claim 1 with that—

The Court: It might be well to go over Claim 1 in refer-
37 ence to it, if you will do it for me.

(The Witness): I can point out the parts. The draw bar and yoke,—what we have considered the arms of the yoke, are connected with the sides of the draw bar. The yoke is in a horizontal position and connected with the sides, and not with the top and bottom of the draw bar.

The Court: I believe I understand claim 1 now.

(The Witness): Yes. Now, the important things are that that yoke is horizontal; that the space in which the yoke and followers are located is open at the bottom, or openable as a removable cover, and that the draw bar and stop projections extend

crosswise above and below the yoke, and that doesn't come in at all on that.

The Court: There is nothing said about stop projections in claim 1?

A. No, I guess not. Some of the claims do not take in the pocket casting.

Mr. Neave: It appears in claim 3, your Honor.

The Witness: "Lugs, extending horizontally across the pocket." Those lugs are what are called the stop projections.

The Court: Oh, the lugs. I see. "Between the lugs and around the rear follower."

The Witness: The lugs are the stop projections on this stop casting, as it is called sometimes, or stop plates,—or stop castings. They are the abutments against which the followers bear.

Q. 9. I hand you a small model of a draft rigging, and
38 ask you to state whether or not that correctly represents the draft rigging in accordance with the drawings attached to the answers to the interrogatories?

The Court: Is this another model?

Mr. Neave: This is of the defendant, your Honor.

Mr. Phillips: I object to the introduction of this exhibit as immaterial.

The Court: Objection noted.

Mr. Phillips: Admitted de bene subject to my exception.

The Court: This is what you claim to be the offending machine?

Mr. Neave: Yes, your Honor.

A. I have looked that model over before in connection with that drawing, and I think it is identical. That is certainly substantially the same thing, and I don't recognize any differences at all.

Mr. Neave: I offer this model in evidence, marked Plaintiff's exhibit 3.

The Court: What did you say about that?

A. I say as far as I can see it is identical with what is represented— I haven't described the parts. I am only now saying that this model is practically the same.

The Court: As described on the blue prints?

A. Yes, that is all.

Mr. Neave: Plaintiffs' Exhibit 3, a model of defendant's device.

Mr. Phillips: Save my exception.

(Model admitted in evidence and marked accordingly.)

Q. 10. Describe this defendant's construction and its operation?

39 The Court: Is that a patented construction?

Mr. Neave: The defendant says that they are manufacturing under a patent. The patent is not exactly the same as this.

The Court: What you claim to be the offending machine,—you leave it to them whether it is patented or not?

Mr. Neave: It is immaterial to us whether it is patented or not. I

assume they will show you the patent themselves. It is not exactly the same structure. It is immaterial to us whether patented or not.

The Court: Yes, certainly.

A. This model represents a draft-rigging construction of the same general character as that I described in my—in connection with the Byers Patent. It has a draw bar, which is the part that connects with the coupling, extends to the draw head of the coupling member that connects with the next car. The rear end of the draw bar is connected with the yoke, and——

The Court: What do you call the rear end?

A. The inner end; the inward end perhaps.

The Court: The inward end.

A. Yes. It is connected with the yoke, and the yoke is in a horizontal position. The forward ends of the two arms of the yoke are connected with the sides of the draw bar.

The Court: This is the yoke?

A. No, this is the yoke (indicating). The connection between the yoke and the draw bar is by a flat bar or key, which passes through openings in the draw bar and in the two arms of the yoke. The key is not headed or riveted. It could be freely removed if you simply take out the cotter pin, or fastening they have to keep it in. In the rectangular space that is formed between the yoke and the
40 draw bar there are a pair of follower plates and twin springs, one above the other, are interposed between those follower plates. Those follower plates have one little feature that I have not explained in connection with the other ones; that is, there is a sort of an indentation that projects on the side where the spring is, just to make a sort of center for the spring so as to keep the springs from sliding along the face of the plate, that is, simply a little teat or projection on the face of the follower against which the spring bears. Now, besides that, down between the follower plates there is one of those stop distance plates. You cannot see it. You can hear it. It is practically the same thing as shown on Figure 9, I think, of the Byers Patent,—shows the same stops. Now, to form the abutments for the pull or push of the draw bar against the springs there is a stop casting, and in this construction it is made in two separate castings. One fastens to one of the draft sills—that is, this long piece here (indicating). The other fastens to the other, and these two side castings have——

The Court: Those are not in sight?

A. Yes (indicating).

The Court: Oh, those; I thought those were the sills.

A. No.

The Court: There is the yoke?

A. No, there is the yoke, and there is the follower (indicating). Now, those are the castings that are fastened to the sills of the car (indicating).

The Court: Oh, yes; what do you call those (indicating)?
41 A. Call them stop castings. They do sometimes call them cheek castings.

The Court: What?

A. C-h-e-e-k castings, because they are on the cheeks of this, but perhaps the most functional name is stop castings, because their function is to make these stops. You see these horizontal projections——

The Court: They stop in an opposite way from what the stop casting inside does?

A. Yes. They simply make the abutment against which the spring acts. Now, you see when buffing or bumping against the car these shoulders here at the top and bottom—they are horizontal projections, top and bottom of these cheek castings, or whatever you have a mind to call them, make an abutment for that rear follower, so that that holds the spring and the front follower from coming up against the spring, and you see there is a space between those projections for the follower to work through, and at the front end there are similar projections.

The Court: Those are two cheek castings above and two cheek castings below?

A. No, it is all one casting. Now, those two castings, together with these horizontal projections, form a rectangular, or enclosed, rectangular space and make a sort of pocket in which the springs and followers can be introduced from below. There is a cover plate which covers the opening of that space. If you take that off, why, those will push out just as they did in the other model.

The Court: What do the cheek castings do here?

A. It is simply a single casting; that is, as if you had a top to this. Now, if you cut the middle part of that top right out of
42 that thing and simply leave the two sides, it would be practically what this is, or, if you simply extended this casting these two castings—that is, added on a sort of a box-like top here (indicating), and went down in here, and just stood up over here, it would be that (indicating).

Q. 11. Mr. Livermore, suppose you take off that bottom plate and show just how the parts come out in the defendant's structure?

A. Yes. In the Byers construction there is a single pocket casting which has two side walls that line the sides, the inner surfaces of the draft sills; has horizontal lugs above and below the yoke and a removable bottom plate which covers the bottom, and when it is taken off the lugs come right out.

The Court: This is the bottom plate you have taken off?

A. Yes, I have taken the bottom plate off (indicating). Now, in this defendant's construction there are two separate castings, one bolted to each side; there are two separate castings instead of a single box-like casting bolted between the two. Now, that connecting the middle part of this casting is simply an additional tie or strengthening between them—between the two sides.

The Court: Say that again.

A. I say, the part that connects this is a single box. This connecting part at the top and bottom is simply an additional tie to strengthen the whole thing. It doesn't perform any working function in connection with any of the parts. If you cut that right out,

you have the same thing as you have there (indicating). It would be just so much dead wood to cut that middle right out of the Byers construction. Now, in these cheek castings, the same as the side walls of the Byers pocket castings, there are grooves that make a guideway for the yoke. That means that when you take out the springs
43 and followers from the bottom, why, the yoke and draw bar remain supported right on their guideway in the side castings, or cheek castings. That shows these little projections I was speaking of, and that is the stop plate. This one hasn't the projection. The Byers construction does not have that (indicating).

The Court: That keeps the springs in place?

A. I think that is an entire explanation of that construction.

Mr. Neave: That is all, Mr. Phillips, of the direct.

Cross-examination by Mr. Phillips:

X.Q. 1. Mr. Livermore, have you ever had any practical experience in the matter of draft gear?

A. No.

X.Q. 2. I hand you a small model which I ask to be marked for identification Defendant's Exhibit No. 1.

The Court: Let us see; what have you named the Complainant's exhibits?

Mr. Neave: Nos. 1 and 2, etc.

The Court: Suppose you name these "A" and "B," etc.

Mr. Phillips: Defendant's Exhibit G.

X.Q. 3. Please state whether or not that model shows with substantial accuracy the construction disclosed in any of the figures of the patent in suit.

A. This model represents substantially the construction represented in Figures 6 and 7; I should say 6, 7 and 8 of the Byers Patent. The springs are a little different. No substantial difference as far as I can see. And there are no bolt holes in this for bolting it to the sides of the timbers, that is, they are not represented. I should say it was a fairly good illustration.

The Court: Of 6, 7 and 8?

A. Yes.

44 X.Q. 4. Will you show the Court what part of that model constitutes what you have referred to as the pocket mentioned in the Byers Patent?

The Court: What is that?

Mr. Phillips: I asked him to show your Honor what constitutes the pocket.

The Court: Shown in the Byers Patent? Is it in Claim 1?

The Witness: It is in Claim 3.

The Court: Oh, yes; "draft rigging having a pocket, lugs, extending horizontally across the pocket."

The Witness: Taken as a concrete thing, I should say that casting was the pocket (indicating). Of course, the pocket is really the space—lugs extending across the pocket are these (indicating).

The Court: Bolts?

A. No, they are these lugs here (indicating) against which the followers bear. The pocket contains the followers, the pocket itself, you see. The lugs are simply these horizontal things above and below.

The Court: This is a part of pocket (indicating)?

A. This is a part of the casting, yes, which makes the abutments against which the ends of the followers bear.

X.Q. 5. Will you kindly designate in some way the part of the model you have been talking about, so that the record will be intelligible when it is read later? Mark it with ink and we will have it painted on. Just say that you mark it with letters.

The Witness: Mark it "3."

The Court: Mark it "3."

The Witness: The entire pocket casting, "3."

45 X.Q. 6. Now, will you please read to the Court the portion of the specifications of the Byers Patent which refers to this pocket?

The Court: You do not mean the claim itself?

Mr. Phillips: Not the claim itself, but the descriptive part of the specification.

A. The description begins on line 36, page 1. It says "3 represents a pocket which contains the springs of the draft rigging and is set between draft timbers to which it is affixed by bolts 4 4."

X.Q. 7. Read the whole description?

A. That was line 32.

The Court: I have got it.

(The Witness): Now, 36 begins: "The pocket may be cast in a single piece and is provided with horizontal lugs 5 5, which extend across the pocket, above and below, and constitute abutments for the followers 6 6', which are set in the pocket. The pocket and lugs are suitably braced by metal ribs or flanges as shown."

X.Q. 8. Now, will you designate on this model the horizontal lugs which extend across the pocket?

A. I have marked them 5 5; 5 5. I have put the marks on the outside of the casting, but it is really the inner faces of those that are the effective part of the lugs.

X.Q. 9. It is true is it not, in the patent in suit, the pocket, in regard to which we have been testifying, is described as a thing, a complete thing in itself, which may be made in a single casting?

A. Certainly. That is the way I understand what I just read.

X.Q. 10. Now, as I understand your testimony, from the parts of this model you have marked, the ends of the pocket constitute stops against which the follower plates bear. Is that correct?

A. The lugs which are at the ends of the pocket space constitute the stops against which the follower plates bear.

46 X.Q. 11. And these extend horizontally across the pocket, do they not?

A. Yes.

X.Q. 12. And the follower plates have a bearing for their entire length, do they not?

A. The entire length of the lugs, that is, the entire width of the plates.

X.Q. 13. The entire width of the plates?

A. Yes; that is, those bear clear across the end of the plate.

X.Q. 14. And this pocket, which is a thing in itself, is provided with a bottom, is it not?

The Court: Provided with what?

Mr. Phillips: A bottom.

The Court: Yes.

X.Q. 15. It has a top, sides and bottom, like an ordinary pocket?

A. At the bottom it has a removable plate to cover the bottom. Of course, you may say that the pocket has a bottom. It is entirely open underneath, except for this cover plate which is fastened over to close it.

X.Q. 16. That is, you can open the bottom?

A. Yes, you can uncover the bottom.

X.Q. 17. Now, this pocket, which is a thing in itself, a complete entity, contains what?

A. Contains the followers, springs and spring stops, and the yoke and part of the rear end of the draw bar.

X.Q. 18. It is true, is it not, that when the pocket described in the patent in suit is secured to the draft riggings or center sills of the car, that those sills are tied together by the pocket?

A. The pocket, of course, makes a connection across one sill to the other.

X.Q. 19. Referring now to Plaintiff's Exhibit No. 2, to what figures in the drawing of the Byers Patent does the construction shown in this model correspond?

A. It is like the construction shown in figures 6, 7 & 8, except as to the connection, or fastening connection between the draw bar and the yoke.

The Court: Say that again. "Except the connection——"

47 (The Witness:) Between the draw bar and yoke in Figures 6, 7 & 8. That is riveted on as shown there. In this model it is fastened by a removable key.

The Court: Is that model substantially that structure there (indicating)?

A. Yes, I believe these are identical.

The Court: Have they been marked?

A. No, they haven't been identified and marked at all yet.

X.Q. 20. I asked you, Mr. Livermore, if this model corresponded to any figure of the drawing of the patent in suit. Will you please answer that question?

A. Why, he wants me to say it doesn't correspond exactly throughout with any one figure. I think I said that on my direct. I am not sure, but that is the fact.

X.Q. 21. Will you please refer to that portion of the specifications of the patent in suit which describes the connection between the yoke and the draw bar?

A. It is first mentioned on page 1, line 50, that "the draw-bar shank 2 is connected with the rear follower 6' by a yoke 2', which is

fixed to the draw-bar by riveting or otherwise." Then on line 75, "I show modifications of my invention, in which the draw-bar shank is attached to the yoke 2' by a rivet key 11, which may be passed through the transverse slot ordinarily formed in draw bars for the aitachment of the so-called American continuous draft rods and through slots in the arms of the yoke and is upset at the ends, as shown." Then taking parts of the paragraph beginning at line 90, page 1, it says, "In figures 10 to 12 I show my improvement applied to use with the American continuous system."

The Court: What line was that?

(The Witness:) That is beginning on line 90, page 1. Then on the next page, line 10, there is this part: "The draw-bar is
48 connected to the arms of the yoke by a key 17, which extends through the usual slot in the draw-bar, through slots in the arms of the yoke, which are preferably doubled, so as to give a better bearing for the key, and through slots in the draft arms, and is adapted to be connected with the draft rods 19 of the continuous system. Now, perhaps it might be a little necessary to explain that, because there was something in that that I have not considered. I did not consider that special modification, what he refers to as draft arms in that construction—where he shows the pocket casting made with two forwardly extending arms, which really take the place of so much draft sill, in that they are abutted on to the ends of the draft sill and make up the forward part of the draft sill practically. Now, that key is to make connection with this continuous connection, that they call it—it is a connection from one drafting to the next, by a link along the car, made outside the draft sill and to accommodate this spring movement. The key which connects the draw bar, yoke, and these continuous members is to go through a slot in this draft arm—a slot long enough to accommodate the spring movement.

The Court: That is called the draft arm or draft sill?

(The Witness:) I say in that particular connection he calls them draft arms, because he makes them an extension of this casting. It is shown in Figure 10. There is the part of the casting that we considered before, about there (indicating), and he carries it forward at the sides. That is part of the casting that we considered before (indicating).

The Court: Yes.

(The Witness:) And for this particular modification he carries these two sides of the casting forward in a kind of fork, in the
49 form of two arms; and that key goes through a slot in those arms. I think that is described, is it not?

X.Q. 22. Is there any description of any key connection in the patent in suit, between the yoke and the draw bar except in connection with what is called the American continuous system?

A. No sir.

X.Q. 23. A removable key connection?

A. No, not easily removable. The other key is headed, and the head would have to be cut off in order to remove it, like any rivet. It is headed over, and that would have to be chipped off more or less, in order to drive it off.

X.Q. 24. Would the key of the American continuous be readily removable?

A. Yes, I understand so.

X.Q. 25. How do you understand so?

A. Why, from the general description, the way it is shown. It is simply put in through there, and a pair of cross pins to hold it in place.

X.Q. 26. Is there anything about the patent in suit to indicate that the key is loose in the draw bar or yoke?

A. No, there is nothing said as to the tightness of its fit—tightness or looseness.

X.Q. 27. Is the key shown loose in the drawing?

The Court: Loose?

X.Q. 28. Shown loose? Or, in other words, can it have some play?

A. There is no play indicated, no special looseness or freedom. There is apparently provision for the play in this American continuous connection, but not in the draw bar and yoke.

X.Q. 29. How long are the rods 19, which are connected with the key 17, in the Byers Patent?

A. Those are the outside rods that run along to a similar coupling at the other end of the car, and, of course, their length depends upon the length of the car.

X.Q. 30. They are as long as the car?

A. Well, they are about as long as the car, the portion of the car between the inner ends of the draft riggings—draft rigging cases.

X.Q. 31. About how much less than the length of the car would they be?

A. Oh, about three or four feet at each end, I should think; something like that.

X.Q. 32. And do these rods have to sustain quite a strain?

A. They are supposed to carry the draft right through—instead of pulling the car apart. Of course, if you pull on the draft at one end, the one at the other end is held back, or hanging back when you start it, and you are pulling the car apart so to speak, trying to pull it apart, and the frame of the car is there to pull on. Now, this American continuous draft rigging is supposed to take that strain off the intermediate part of the car body, and it simply connects one draft rigging to the next, and it is, of course, strong enough to take the pull of the locomotive.

X.Q. 33. As a matter of fact, they have to be strong enough to pull the entire train, do they?

A. They should be of course.

X.Q. 34. And heavy?

A. And what?

X.Q. 35. And heavy?

A. Why, of course, strong and heavy. I don't think they are used on the present long trains to any great extent.

X.Q. 36. And in order to remove the draw bar in the arrangement shown in——

A. Figures 10, 11 and 12.

X.Q. 37. The rod would have to be taken down, would it not?

A. They would have to be taken down, or supported at this end (indicating on model). If you take this key out of the draft rigging at one end of the car, the rod would hang on the key at the other end and be so long it would twist. It would be so long in hanging on a flat key like that (indicating on model)—so that you would either have to take it off at both ends, or put a horse or something under it to hold this end up (indicating), then pull the key out.

X.Q. 38. Isn't it true that these, the rods, have to be tight from end to end?

A. Tight from end to end?

X.Q. 39. Yes, so as to properly take the strain put on them of pulling the draft of the car?

A. I am not personally familiar with this American continuous rigging.

X.Q. 40. Do you know anything about the difficulty of tightening the rods up again after they have once been removed?

51 A. I really do not know anything practically as to the continuous rigging, except I know its general purposes to connect one draft rigging with the next.

The Court: That is, with the next car?

A. No, with the next one on the same car,—to connect the one at this end with the one at that end; pulling on that it pulls through to the next draft rigging (indicating on model).

The Court: The result is that when it is coupled it makes the strain right through the car?

A. Yes.

The Court: That is the idea?

A. That is the idea.

The Court: And that makes it continuous from car to car when they are coupled?

A. Yes.

X.Q. 41. When they are coupled. Did I understand you to say that the American continuous system was not in use?

A. I say it is not in extensive use to-day in long trains.

Z.Q. 42. There may be twenty or thirty thousand used for all you know?

A. There may be fifty thousand; I should not call that a very large use.

X.Q.43. There might be twenty thousand used on one road?

A. Possibly, yes. I do not know anything about that at all.

X.Q. 44. You don't speak of your own knowledge on that subject, then?

A. No; I do not know anything about it. I have not had any experience with it at all.

X.Q. 45. Is it not true that the draw bar is a part that has to be very frequently replaced in draft riggings of this kind?

52 A. Well, you asked me a while ago if I had practical experience in this thing, and I said no. Of course I don't know

about that from practical experience. If you ask my judgment I can give it.

X.Q. 46. Well, in your judgment, do you think they would be liable to be broken?

A. I should suppose a good many of these accidents would be in the draw bar itself.

The Court: Accidents would injure them, where there is a collision?

A. Yes, when they come together in an ordinary coupling they bump pretty hard in a freight train; and of course, in a collision, where there is an accident, there is a great jar. If it is a light collision it might simply smash part of it.

The Court: Are they steel?

A. Iron I should say. It is a big heavy casting.

The Court: Wrought iron?

A. No, cast iron. They make pretty tough castings now.

X.Q. 47. Outside of the figures in the patent that illustrate the American continuous system, what figures do you find, in your opinion, to illustrate any structure whereby the draw bar may be conveniently removed or replaced?

A. There is none other where the draw bar alone can be very easily removed or replaced. It would involve chipping off the head of a rivet which could either be done on the car, or it would involve taking out the springs—taking off the bottom of the pocket casting and taking out the springs and followers, and then the draw bar and the yoke could be taken out together and handled outside.

X.Q. 48. Have you got any idea how heavy this draw bar is, from practical experience?

A. No, I do not know anything about those things; but I think there is going to be a practical man on, is there not, that will
53 explain all those things. I am not prepared on that sort of thing, because I think there will be other testimony if necessary.

X.Q. 49. You have a general idea, don't you, Mr. Livermore?

A. I know they weigh some hundreds of pounds.

X.Q. 50. Some hundreds of pounds, yes.

A. Yes, sir. I know I should not want one of them to drop on my toes, or have to handle it myself.

The Court: What is that, the draw bar?

X.Q. 51. It that the draw bar?

A. That is the draw bar, which is a heavy thing, of course; a clumsy thing to handle, no doubt about that.

X.Q. 52. Well, you have learned from your general knowledge of mechanical matters and the figures of the patent in suit, that a draw bar weighs a good deal more than the yoke?

A. Oh, yes; it is a much heavier part than the yoke.

X.Q. 53. As a matter of convenience, a device which makes it convenient to remove the draw bar, especially in case of accidents, on the road, would be a very useful thing, would it not?

A. Yes, it would be. Unquestionably anything that aids to the convenience and rapidity of any change, in which a repair or change can be made, is useful. I don't think cars usually carry spare draw bars around with them to put in on the road.

X.Q. 54. You don't know that they don't?

A. No, I do not know that they don't. Possibly the freight trains do carry one or two.

X.Q. 55. Isn't it true that one of the principal purposes in making the parts of a draft rigging removable is that the draw bar need not be taken out—you will not have to remove the draw bar?

A. Everything helps. That is, the least taking down you have to do to make the particular replacement you want, the better it is.

54 That is, if it is to simply replace a broken spring, if you can have it so that you do not have to take away the draw bar to make that spring, why, that is a great advantage, of course. If it is a case of replacing the draw bar free without disturbing anything else, that is unquestionably some advantage.

X.Q. 56. You called the Court's attention to the arrangement of the springs in the Byers Patent. Isn't that stated in the patents, that arrangement, as a mere preference?

A. It says that in line 43—"7 7' are the springs, placed, preferably, one above the other between the followers".

X.Q. 57. Yes. Now, you have referred to the yoke in the device in this patent in suit as being a horizontal yoke. Do you find it so described in the specifications?

A. It is certainly so described—not so designated. That is, I do not think the word "horizontal" is used. But it is common to speak of them in this arrangement as horizontal, and in the other arrangement as vertical. So I used that term in explaining what was meant. The yoke is described in the patent as in that position in which the arms of the yoke are at the sides of the draw bar, and there is a vertical space between the arms. The word "horizontal" is used with the lugs, but I don't think it is with the——

X.Q. 58. Is there any language in the specifications that suggest the yoke is horizontal?

A. It seems to me that the entire language suggests nothing else. It does not use that word "horizontal" in describing it, but it says that the pockets open at the bottom so that the follower plates and springs may be removed freely from within the yoke in a vertical direction. Now, how could they be removed from within the yoke in a vertical direction unless the arms were at the sides? If they were one above and one below, of course that would be impossible. And it is so shown in all the drawings. As I say, the whole description seems to me to indicate that, and nothing else.

X.Q. 59. If it is a mere matter of preference that the springs be placed one above the other, why is it not a mere matter of

55 preference that the yoke be horizontal?

A. Simply because the entire purpose of the thing is to have the yoke, the springs and followers removable in a vertical direction from beneath. That would—with relation to the springs being preferably one above the other—that might be preferable;

they might be arranged side by side, and yet have the yoke horizontal. That is, you simply have got the two follower plates in a vertical position, movable up and down vertically, within the yoke, and the springs between them. Now, it is preferable to have the springs one above the other and have the greatest length of the plate up and down, for that arrangement. But, whether the springs were one above the other or not, the horizontal position of the yoke and the vertical movement of the followers and springs through it is an essential and not a preferable matter at all.

X.Q. 60. Does the patent state anything about what the reason for the preference is——

A. About the springs?

X.Q. 61. About the springs.

A. I don't think so.

X.Q. 62. Does it suggest that the springs arranged that way have any different action than if they were arranged side by side?

A. Not that I know of.

X.Q. 63. Or one inside the other?

A. Why, I think the arrangement, one inside the other—that is simply a way of making a stronger spring.

X.Q. 64. Isn't it true that two springs or three springs will make it stronger?

A. Stronger than a single one, yes. It is easier to make it in two or three wires than one.

X.Q. 65. Then I don't quite see the difference between that and——

A. It is this: the condition where they are nested one inside the other, the nested spring takes no more room, it goes right in where any single spring would go; but where they are twinned, either side by side or otherwise, where two or more are used in any other arrangement, there has got to be some provision for their getting into their place and having their proper bearing. Sometimes they are placed in a tandem arrangement, one behind the other, some-
56 times placed side by side, and sometimes one above the other. There are cases where there are four springs used.

The Court: Do you mean generally, or confined to the draft-rigging art?

A. I mean in the draft-rigging art—simply in the draft-rigging art.

X.Q. 66. Would you call that a pocket, Mr. Livermore? (Witness' attention is called to a device marked for identification Defendant's Exhibit H.)

A. No, I should not call that casting by itself a pocket.

X.Q. 67. Would you call these two castings a pocket?

The Court: Showing another one like "H"?

Mr. Phillips: Showing Defendant's Exhibit I.

A. I don't think that, as far as the question of my use of language goes, that I should commonly call those two a pocket,—or I should say they were a pocket, or may enclose a space between them like a pocket.

X.Q. 68. They certainly are not a pocket, which is a thing in itself.

A. They don't make a single thing enclosing a space.

X.Q. 69. I show you now Plaintiffs' Exhibit No. 3. The outer walls of the exhibit are a part of the car,—are part of the draft sills of the car, are they not?

A. Yes.

X.Q. 70. And those draft sills have extending from one to the other a plate, do they not?

A. A bridge.

X.Q. 71. A bridge plate?

A. Yes.

X.Q. 72. Shown at the middle of the model?

A. There is one at the middle and one at each end.

X.Q. 73. What does that bridge plate attached to the sills of a car do?

A. So far as I know, it simply braces the two sills together.

X.Q. 74. Now, in the model a bridge plate is also provided,
57 is it not, at the bottom of the draft sill shown in the middle of the model?

The Court: The lower side?

Mr. Phillips: Lower side, yes.

A. There is a cover plate bolted to the sills, and it does make a cross-bridge connection between them.

X.Q. 75. Is it connected in any way with the cheek casting?

A. No.

X.Q. 76. What does that that you call the bottom plate do?

A. It covers the bottom of the space between the cheek plates that contains the springs and followers; in other words, encloses the bot tom of the pocket so that they cannot get out.

X.Q. 77. That is, it supports the springs and keeps the springs and followers in their position between the cheek plates?

A. And prevents them from getting out, yes.

X.Q. 78. And prevents them from getting out?

A. And from dropping out and sliding down.

X.Q. 79. And that forms no part of either one of these castings?

A. No.

X.Q. 80. Cheek castings, I mean?

A. No.

X.Q. 81. I ask you, Mr. Livermore, to examine the model, Plaintiff's Exhibit No. 3, and state whether or not you find that the arms of the yoke through which the key passes are provided with elon gated slots (handing model to witness)?

A. They are.

X.Q. 82. What is the function of those slots?

A. The function of those slots is simply to make an opening for the key. Now, as the elongation is towards the rear, I do not see that it has any special use or function, but it does permit the draw bar to yield inwardly a little way, before it carries the yoke with it.

X.Q. 83. Have you any idea, as a practical man, as to what the extent of the movement of the part is, in a device of this character?

A. I think it is about four inches. I am not absolutely sure about that, but it is not far from four inches, I think.

58 X.Q. 84. It is true, is it not, Mr. Livermore, that the slotted connection——

The Court: The what?

X.Q. 85. That the slotted,—the elongated slotted connection, between the yoke and the key, permits the key to move independently of the yoke?

A. Yes, for a short distance in the rearward direction.

X.Q. 86. In a rearward direction. Do you find, in any of the figures of the patent in suit, any construction illustrated which shows any such slotted or loose connection?

A. No.

X.Q. 87. Do you find, in the patent in suit, any statement that the key shown in the patent, key 17, shown, for example, in Figure 10, is removable?

A. You ask if there is a statement in the specifications it is removable?

X.Q. 88. Yes.

A. I do not think it states so in the language of the specifications.

Redirect by Mr. Neave:

1. Re-D. Q. Mr. Livermore, in the structure shown in the Byers Patent in suit, and in the defendant's structure, does the key, or the rivets, connecting the draw bar and the yoke, have to be removed, in order to permit the removal of the followers, springs and spacer block?

A. No.

59 GEORGE A. JOHNSON, called by the Complainants, sworn, testified as follows:

By Mr. Neave:

Q. 1. Mr. Johnson, you live at the Hyde Park Hotel, in Chicago, do you not?

A. I do.

Q. 2. Are you a mechanical engineer, in the employ of Mr. W. H. Miner?

A. I am.

Q. 3. What is Mr. Miner's business?

A. He is engaged in putting on the market, for sale, various railroad specialties.

Q. 4. Including draft gears.

A. Including draft gears.

Q. 5. Does he himself manufacture?

A. He does not.

Q. 6. From whom does he obtain the devices or parts of devices which he sells?

A. He obtains these devices, and parts of devices, from the National Malleable Castings Company, at Chicago, and also of the Pratt & Letchworth Co. of Buffalo, New York.

Q. 7. How long have you been connected with Mr. Miner as mechanical engineer?

A. Since June, 1910.

Q. 8. What have been your duties during this period?

A. I have been in charge of the mechanical department, which includes the preparation of all drawings and designs, the making of all estimates, inspection of all material manufactured for us, the inspection of the draft riggings as applied to various equipments, and keeping in touch generally with the draft gears as manufactured throughout the country.

Q. 9. I show you the drawings attached to the answers of the interrogatories in this case (handing same to witness). Are you familiar with the draft gear shown in those drawings?

A. I am.

Q. 10. Are you familiar with that particular drawing; I am now referring to the Assembly Drawing?

A. I am, sir.

Q. 11. Did you ever see that particular drawing prior to the beginning of this suit?

A. I did not.

60 Q. 12. Had you prior to that time seen any drawings with exactly the same construction?

A. Yes, sir.

Mr. Phillips: What is the question, please?

Mr. Neave: Had you, prior to that time, seen any drawings showing the same construction?

Mr. Phillips: Prior to what time?

Mr. Neave: Prior to this suit?

A. I have sir.

Q. 13. Where was that drawing, and what did you do with it?

A. In September, 1912, I sent a similar drawing to the Boston & Maine Railroad illustrating some draft gears which they purchased from us at that time.

Mr. Phillips: I object to the answer as a mere statement of opinion and a conclusion on the part of the witness.

The Court: He may answer. Objection noted.

Q. 14. Have you a copy of the drawing you sent to the Boston & Maine at that time; and, if so, please produce it?

A. I have, and produce it.

Mr. Neave: I offer it in evidence, marked "Plaintiffs' Exhibit No. 4."

Q. 15. What does this drawing show, as compared with the Assembly Drawing forming a part of the Defendant's answers to the interrogatories?

A. That drawing shows the Byers draft rigging applied to a car structure.

Q. 16. And how do the details compare with the details shown on

the Assembly Drawing attached to the answers to the interrogatories?

A. The elevation in the upper left hand corner is practically identical. There is a slight difference in the vertical location of the front rivets passing through the cheek castings. Also, on the
61 print attached to the interrogatories, the draw bar, springs, followers and yoke are cross-hatched, while these items appear in full on our drawing; this is purely a mechanical difference, and does not affect the design. The plan is the same, except for slight differences in cross-hatching, and so forth. The vertical cross section is the same. There is, on the print attached to the answers, an additional vertical cross section, which we do not show, but which could easily be made from our drawing. There is another view on the blue print attached to the answers to the interrogatories, showing end elevation of the car, which extends further across the car than the similar view on our print. The print I sent in September, 1912, also details carefully the follower plates, the yoke, the key, the carrier plates, and the washer for the key.

Q. 17. How long, to your knowledge, has Miner been selling draft rigging just like that shown on the drawing that you have just produced?

A. Mr. Miner was selling draft gear similar to that shown on the drawings when I entered his employ, in June, 1910.

Q. 18. And has been doing so ever since?

A. He has, sir.

Q. 19. I call your attention to the large steel structure here in the court room; at one end of that structure is the Byer draft rigging as Miner has been selling it during this period?

A. On this end (indicating on large metal model).

Q. 20. And at the other end,—what draft rigging is mounted at the other end of that model?

A. The same rigging as on the other end.

Q. 21. And does that rigging correspond with the rigging attached to the answers to the interrogatories?

A. Would you read that please?

Q. 22. Does that rigging correspond to that shown in the drawings attached to the answers to the interrogatories?

A. It does. Of course the model shows a different car construction than the drawing, but the rigging itself is——

Q. 23. That is, the center sill is not exactly the same——

A. The center sill is not the same.

62 Mr. Neave: Plaintiff offers in evidence the model the witness has just referred to, marked Exhibit No. 5.

Mr. Phillips: I object to the introduction of this exhibit, as incompetent, and the materiality has not been established; and save an exception to it.

The Court: What is that?

Mr. Phillips: There has been no evidence showing that that model is material in any way to this case.

The Court: Read the question.

Mr. Neave: He was objecting to my offer to the model in evidence, that large model over there; he objects to it on the ground that it has not been shown that it is material to the issue.

The Court: I will admit it de bene, subject to objection; he may offer an objection.

Mr. Phillips: Save an exception.

Q. 24. You said that Mr. Miner has been selling those draft riggings ever since June, 1910?

The Court: What is that model?

Mr. Neave: It shows, at one end of the center sills, the construction as the plaintiff has been selling it for all these years; it shows at the other end, the construction that the defendant has now sold,—the device.

The Court: It shows the Byers machine, and the alleged offending machine?

Mr. Neave: Yes, your Honor. We have it here in full size, in addition to the small models here, so that your Honor can get an idea of exactly what the structure is with which we are dealing.

Mr. Phillips: I call your Honor's attention to the fact that there is no proof that any of those devices was made by the defend-
63 ant—any of the devices embodied in that model, made by the defendant. As an illustrative model, I have no objection to it.

The Court: It will be received de bene for the present, but it will be connected I suppose.

Q. 25. Now, with relation to these draft riggings that you say Mr. Miner has been selling ever since you went with him, in June, 1910, what parts did he sell?

A. The cheek castings, and the spacer blocks.

Q. 26. And those are the parts that he has been selling, of this draft rigging, during all this period?

A. Yes, sir.

Q. 27. Where has he obtained these check plates and spacer blocks?

A. He obtains them from the National Malleable Castings Co.

Q. 28. He buys them from that company and sells them?

A. Yes sir.

Q. 29. What markings are there on these parts, as they are received from the National Malleable Castings Co.?

A. They bear the words "Patented May 7, 1901," the National Malleable monogram, "C. H.", a moulding date, and a pattern number designation.

Q. 30. Did all these cheek plates that Miner has purchased from the National Malleable Castings Co. since 1910 bear this patent date, May 7, 1901?

A. They do.

Q. 31. In what type of draft gear are these cheek plates and spacer blocks sold to be used?

A. In the Byers type of draft gear.

Q. 32. In the form shown in the drawings that have been referred to?

A. Yes.

Q. 33. Do you know how many of these cheek plates and spacer blocks Miner has sold since you have been with him?

A. I cannot say exactly, but my observation in the foundries during that time would indicate upwards of fifty thousand riggings.

Q. 34. And by rigging do you mean for a complete car, or for just one end of a car?

A. One end of a car.

64 Q. 35. One end of a car. How do the spacer blocks and cheek plates that the defendant has sold, as shown in the blue prints marked G 34 and F 1653, attached to the answers to the interrogatories, compare in structure with the cheek plates and spacer block that Miner has been selling during all this period?

Mr. Phillips: What is that question, please?

(Question read.)

Mr. Phillips: May it please your Honor, I object to the interrogatory in its present form, because it does not appear that prior to the filing of the bill of complaint in this case the defendant ever sold any spacer blocks or followers made according to that drawing.

Mr. Neave: The question may be read as though it stated the cheek plates and spacer blocks that the defendant agreed to sell, in accordance with the answers to the interrogatories.

The Court: He may answer subject to objection. Let the objection be noted.

Mr. Phillips: I still continue my objection to the question, on the ground of its absolute immateriality. This defendant is charged with an infringement, the making, using and selling,—or making and selling these spacer blocks and followers to persons who intended—who were incorporating parts in a completed structure; and what they agreed or did not agree to do seems to be absolutely immaterial. It seems to me that this complainant has got to prove actual sales of these parts, at least, prior to the filing of the bill of complaint.

The Court: This does not conclude on that question; it does not take the place of proving that he has sold, but a man puts his testimony in at different times. Non constat, he may prove that by another witness. I clearly shall allow this man to show what he claims.

Mr. Phillips: I am willing that that should go in de bene, subject to my objections.

The Court: He may answer, and let the objection of counsel appear and be noted.

65 A. Card G 34 shows a spacer block which is practically identical with the spacer blocks which we have been selling. The only difference I can see now is that on the side of the casting, on the material we sell, there is a hole used to anchor a core. This is merely a foundry variation. The working parts are identical. On card F 1653, showing the cheek castings, the cheek casting is prac-

tically identical with the ones we furnish. A slight difference noted on the rear posts on the plan view is probably a draftman's error, as the end views and elevations are consistent. There are slight differences in thickness of metal, but these do not in any way affect the working parts.

Q. 36. Has it been a part of your duties, while you have been with Mr. Miner, to keep track of the various forms of draft gears that are put on the market by various companies?

A. It has.

Q. 37. Before you entered Mr. Miner's employ, what were you doing?

A. I was with the American Car & Foundry Company.

Q. 38. During what period?

A. From 1899 to 1910.

Q. 39. What were your duties there, and particularly so far as keeping in touch with the various forms of draft rigging that were on the market?

A. I entered the employ of the American Car & Foundry Co. in 1899 as draftsman; my duties were to prepare drawings of car structures, showing different types of draft rigging applied thereto; I also spent a great deal of time in the shop, assisting in the application of draft rigging. I studied catalogues, and cuts and advertisements issued by all draft gear manufacturers; I attended a great many Master Car Builders' Conventions, and examined the exhibits there; and I prepared estimates on cars, including various draft riggings.

Q. 40. In what draft gears with which you have been familiar from 1899 to the present time could the cheek plates and follower blocks, such as those sold by Miner and shown on the drawings attached to the answers to the interrogatories, be used?

A. With the Byers gear.

Q. 41. In any others?

A. Not any others.

66 Q. 42. Upon the basis of your knowledge of the draft gear business from 1899 to the present time, when did The Symington Company first put out, or agree to put out a draft gear of the character here in suit?

Mr. Phillips: I object to that as immaterial.

The Court: Repeat that.

Mr. Phillips: I object to that portion of the interrogatory which relates to any agreement which The Symington Company is alleged to have made, unless it be shown that there was some actual act of infringement committed prior to the filing of the bill of complaint.

The Court: I will allow it to go in subject to your objection; it will have to be connected. He may answer.

A. I learned that the Symington Company——

The Court: What? How did you begin your answer?

A. "I learned"——

The Court: "I learned"——

A. I learned that the Symington Company——

Mr. Phillips: It seems to me that that is hearsay?

The Court: Well, what do you mean by "learned"?

A. I heard it.

The Court: No. That is clearly hearsay on the face of it. I do not know what he means by it yet.

Mr. Neave: It would refer to the interrogatories here, I should suppose,—or the answers to the interrogatories.

The Court: Do you refer to the interrogatories?

67 A. Yes.

The Court: You may say "By reference to the interrogatories I find"——

A. ——that the Symington Company manufactured these Byers castings late in 1913, as they were on hand at the car works early in 1914.

Mr. Phillips: May it please your Honor; I object to the statement on the part of this witness of what is contained in the interrogatories, when the interrogatories are before the Court. It seems to me it is incompetent for him to construe the language of the interrogatories.

The Court: There is nothing further—he states no further probative fact except what is stated in the interrogatories; no harm done. He is simply re-stating.

Mr. Phillips: Whether he is mis-tating the interrogatories or not, he is putting a color on them.

Mr. Neave: I will ask another question which I think will clear that up.

Mr. Phillips: I object, may it please your Honor, to the answer, on the ground——

The Court: I think it will not prejudice the Court by referring to the interrogatories. I shall look to the interrogatories. If he is laying this as a foundation for something further—is that what you are doing, Mr. Neave?

Mr. Neave: I was going to ask him a question rather in another form so as to try to obviate Mr. Phillips' objection.

The Court: Strike out the other one?

Mr. Neave: Strike out the answer.

The Court: Strike out question and answer.

Q. 43. Did you ever, prior to this suit, know of the Symington Company having sold, or agreed to sell, any draft gears of this character?

A. I did not, sir.

68 Cross-examination by Mr. Phillips:

X.Q. 1. Is it true, Mr. Johnson, that Mr. Miner controls the National Malleable Castings Co., the nominal plaintiff in this case?

Mr. Neave: I did not catch that, Mr. Phillips.

X.Q. 2. Isn't it true that Mr. Miner controls the Malleable Castings Company, the nominal plaintiff in this case?

Mr. Neave: I have no objection if the witness knows.

A. Not to my knowledge, sir.

X.Q. 3. Isn't it true that prior to the commencement of this suit, Mr. Miner was sued for infringement of the Emerick Patent, the alleged infringing device being the device Plaintiffs' Exhibit 5?

A. There was a suit brought against W. H. Miner by The T. H. Symington Company, I believe, alleging infringement.

X.Q. 4. And you testified as a witness in that suit?

A. I did sir.

X.Q. 5. And has that suit been decided?

A. I have heard so, yes sir.

X.Q. 6. And Mr. Miner was held to infringe the Emerick Patent?

Mr. Neave: Mr. Phillips, I think the holding in that suit better be proven, if you want to prove it, by the opinion of the Court.

Mr. Phillips: I want to show by this witness that this is simply a spite suit.

Mr. Neave: All right. Then go ahead, if you can.

The Witness: May I have the question read?

(Question read.)

A. I was informed that we lost the suit.

X.Q. 7. Yes; you were informed that the Court sustained
69 the Emerick Patent, and that Mr. Miner was held to infringe?

A. I was informed that we lost the suit, but I was also informed that the case had been appealed, and I am very confident it will be reversed in the upper court.

X.Q. 8. And you know, do you not, that this suit was not commenced until after the plaintiff in this case had sued Mr. Miner?

A. I do not know that, sir.

X.Q. 9. I hand you a copy of a patent to W. H. Emerick, draft rigging for cars, No. 693643, February 18, 1902. Is that the patent which was involved in the suit of the Symington Company, complainant, versus William H. Miner, defendant, in which you said you testified as a witness?

A. I believe it is, sir.

Mr. Phillips: The copy of the Emerick Patent handed to the witness is marked for identification Defendant's Exhibit J.

X.Q. 10. Did Mr. Miner put out a form of draft gear known as the Miner twin spring?

A. That title appears on a great many drawings.

X.Q. 11. What was it like?

A. It is a Byers structure.

X.Q. 12. Called the Miner Twin Spring?

A. We called it that because we are selling and manufacturing under the Byers Patent.

X.Q. 13. Then you do not sell, as you stated, a Byers type of draft gear?

A. When there is any necessity for referring to it that way, we do, yes, sir.

X.Q. 14. But commonly referred to as a Miner twin spring?

A. That is common to all the devices we sell.

Cross-examination closed.

70 GOODRICH Q. LEWIS, called by the Complainant, sworn, testified as follows:

By Mr. Neave:

Q. 1. Your residence?
A. Town of Wheaton, Illinois.
Q. 2. You are a mechanical engineer in the employ of W. H. Miner?
A. I am.
Q. 3. Where were you on March 23rd to 27th, 1914?
A. In Laconia, New Hampshire.
Q. 4. At any particular works there?
A. The works of the Laconia Car Company.
Q. 5. What is the business of the Laconia Car Company?
A. The manufacture and repair of passenger and freight cars.
Q. 6. While you were there did you see any freight cars marked as belonging to the Boston & Maine Railway Company that were having their under-framing changed?
A. I did.
Q. 7. A number of them?
A. A great number.
Q. 8. Did you, while you were there, see underframes having draft rigging on them which were being applied to these cars?
A. I did.
Q. 9. What was the structure of this draft rigging? Can you identify it as being like or unlike the drawings attached to the answers to the interrogatories?

Mr. Phillips: May it please your Honor, I object to this as absolutely immaterial. It doesn't appear that this witness saw these draft riggings, whoever made them, until after the bill of complaint was filed.

The Court: He is asked if he saw the structures which are illustrated by these drawings. He may answer. Of course your objection goes to the probative value. He may be mistaken about it. I think I must allow the question subject to your objection, and you will have your full rights protected.

71 A. The draft rigging I saw at Laconia, New Hampshire, at the Laconia Car Company's plant were practically identical with the structures shown on the drawings attached to the interrogatories.
Q. 10. You say "practically identical." Did you notice any differences?
A. There were no differences as far as the practical working of this device was concerned.
Q. 11. What kind of differences were there?

Mr. Phillips: I object to the answer as a mere statement and conclusion on the part of the witness.

Q. 12. What kind of differences were there?

Mr. Phillips: The Court has no means of judging of the accuracy at all.

The Court: The question is how much he saw. Your objection goes to the probative value of it. I must admit it for what it is worth.

Mr. Phillips: It all relates to matter which happened after the filing of the bill of complaint. The witness on his own statement never saw the device until after the bill of complaint in this suit had been filed.

The Court: It must be connected with the infringement, of course. I will allow it for what it is worth. He may answer.

Q. 13. What were the differences?

A. I can find no essential differences.

Q. 14. You say "essential". Can you point out any differences at all, so that we can judge what you mean by "essential"?

A. Well, I can find none.

The Court: No differences at all?

A. I find one difference. In the case of drawing labeled "Card F 1653" in the plan view of the cheek casting, I find a structure, which is a mere detail, which varies from the casting which I saw.

72 Q. 15. There is there, as I remember it, a dotted line, in one of those drawings, that does not seem to show in the elevation?

A. Yes.

Q. 16. It is doubtful what it means?

A. Yes.

Q. 17. It is out of the end of the structure entirely, isn't it? Out of the end of the cheek plate?

A. Yes, sir.

Q. 18. Did you take any photographs of these draft riggings you saw at Laconia that day?

A. I did.

Q. 19. Will you produce two or three of them so that we can see what they show?

Mr. Phillips: May it please your Honor, to save my rights I would like to repeat my objection and have my exception taken to all this line of examination, which relates to things which this witness saw after the filing of the bill of complaint.

The Court: Whenever counsel objects, the objection is noted. (Witness produces photographs.)

Mr. Neave: These photographs are offered in evidence, collectively, as Plaintiff's Exhibit No. 6.

Q. 20. These draft riggings that you saw there at Laconia were attached, as I understand it, to steel center sills, were they?

A. They were.

Q. 21. Of the character shown in Plaintiff's Exhibit No. 5, except that, of course, that center sills were longer than there shown, the center sills being of length with the actual car length?

A. The draft riggings were identical. There was this difference, in that the sill construction was of Z bars instead of channels, but differed only in this particular.

Q. 22. While you were at the Laconia Car Company's shops on this visit did you see any drawings purporting to show the assembly of these draft gears?

A. I did.

Q. Were those drawings marked with the name of any manufacturer?

73 Mr. Phillips: I object.

The Court: Were those drawings what?

Mr. Neave: Marked with the name of any manufacturer. I will tell you what I propose to show. I do not know whether Mr. Phillips has it in mind. These drawings were marked as having come from the Pressed Steel Car Company. Therefore, the witness went to the Pressed Steel Car Company to find out whether they had received these from Symington. He first saw those at Laconia, New Hampshire; and he saw on looking over the assembly drawings that they had been made by the Pressed Steel Car Company, and that was his reason for going to the Pressed Steel Car Company in Pittsburg to see where these castings came from.

The Court: What difference does it make if he finds out anything by going there? How do you care to prove the road by which he went, or the marks on the road?

Mr. Neave: Because we cannot prove from anything at Laconia that these parts he saw there came from the Symington Company, the defendant. He saw certain things at Laconia which he recognized.

The Court: He saw certain marks on them?

Mr. Neave: Not on them; on the drawings. So that gave him a clue that these came from the Pressed Steel Car Company.

The Court: On what drawings?

Mr. Neave: The drawings showing how these parts were to be assembled and put on the car.

The Court: Where did he see the drawings?

Mr. Neave: At Laconia.

The Court: I think he may answer that subject to objection.

Mr. Phillips: Well, of course, if your Honor is going to let it in, there is no use of my stating my objection more fully. I might as well save an exception.

74 The Court: I thought you had stated it.

Mr. Phillips: In the first place, of what possible materiality can it be in this cause what induced this witness to go to Laconia? In the second place, what he saw on drawings in the hands of some third people might have been written there by themselves for all anything shows in this case. It seems to me it might be characterized, as Judge Lowell did in a case I had the pleasure of arguing before him years ago—"Robin Hood lives in the Wood testimony"—that is, absolutely without any bearing.

Mr. Neave: His objection goes to the weight, it seems to me.

Mr. Phillips: It goes to the competency of the testimony. What possible ground under the law of evidence, can it be competent in this cause what the motive of this witness is, or can be evidence against this defendant what this witness saw on drawings which are not produced, and which there isn't a scintilla of evidence to show that this defendant knew anything about. I like to see all the facts go in in cases of this kind, because we have got to have a hearing before the Court of Appeals.

The Court: Let us see precisely what it is. He goes to Laconia and sees certain drawings. Now, you say that you offer evidence tending to show upon those drawings was the name of the defendant company?

Mr. Neave: No, of the Pressed Steel Car Company.

The Court: Pressed Steel Car Company?

Mr. Neave: May I go back to the interrogatories a moment, which have not been read to your Honor, and the answers?

The Court: Let's hear it.

Mr. Neave: In one of the answers the defendant says it did, during August, 1913, agree to furnish to the Pressed Steel Car Com-
75 pany cheek castings and spacer blocks, which I understand were for application to certain center construction which that company was bidding on for the Boston & Maine Railroad. The parts referred to are illustrated in blue prints annexed hereto. Those are the blue prints we have been looking at, that is, they are two of the plue prints.

Another interrogatory says, in its answer, a blue print was submitted to the defendant company during the period named as a basis for bids for draft gear parts to be installed on the cars of the Boston & Maine Railroad Company, and that is the assembly drawing.

The Court: Now, you have got that in evidence.

Mr. Phillips: Yes.

Mr. Neave: Now, I want to show in pursuance of the agreement with the Pressed Steel Car Company, which they have admitted, they carried out the work contemplated by the agreement; that the parties not only made an agreement that they would sell these parts, but that they actually went on and completed that agreement.

The Court: What evidence have you tending to show that?

Mr. Neave: We got that at the Pressed Steel Car Works. The Laconia part only shows that in pursuance of what is stated in these interrogatories——

The Court: What do you claim that tends to show if I allow him to say that he saw the name of the Pressed Steel Car Company on these drawings? You claim that is evidence tending to show what?

Mr. Neave: It is corroborative of the fact that this transaction, which is admitted in the interrogatories, was carried out; that the parts went from Symington to the Pressed Steel, and that the
76 Pressed Steel supplied them to the Boston & Maine Railroad.

The Court: Do you mean to offer in evidence tending to show that he saw these drawings in some place where the tendency would be to show they were for a certain purpose?

Mr. Neave: He saw these assembly drawings at the place where this material and these draft riggings were being installed on the Boston & Maine cars; the assembly drawings being for the purpose of showing how installation should be made.

The Court: Where does he say he went?

Q. 24. Mr. Lewis, at the Laconia Car Company's shops, as I understand it, you have testified that when you were there that company was supplying some of these draft riggings, the center sills, to Boston & Maine cars. You saw that being done?

A. I did.

The Court: Was doing what?

Mr. Neave: He saw these center sills and the draft rigging being applied to the Boston & Maine cars.

Q. 25. Then you saw there some drawings?

The Court: From which the work was being done?

Q. 26. Was the work being done from those drawings you saw?

A. It was.

Mr. Phillips: I would like to have some testimony from the witness now.

The Court: No, he asked him if he saw this work. You may ask him what was done if he knows.

Q. 26. What work was done there that you saw?

A. The application of the draft sills, with the Byers draft applied, to these draft sills.

77 Q. 27. The progress of this work that you saw is illustrated by these photographs?

A. It is.

Mr. Phillips: He said the application of the "Byers," not the defendant's.

Mr. Neave: It is hard to tell them apart, Mr. Phillips.

Mr. Phillips: No, because the Byers infringes the defendant's patent.

Q. 28. Now, those photographs show the different stages that you saw in the application of these things to the Boston & Maine cars?

A. They do.

Q. 29. What do the assembly drawings that you saw have to do with that?

A. They are complete working drawings of the entire application.

Mr. Phillips: I object, may it please the Court, and save my exception.

The Court: I admit it subject to the objection.

Q. 30. Then, Mr. Lewis, after leaving the Laconia works, did you go to the Pressed Steel Car Company's works in Pittsburgh?

A. I did, but not directly.

Q. 31. When were you at the Pressed Steel Car Company's works?

A. On April 9th.

The Court: Was that soon after what he saw?

Mr. Neave: Yes. He left Laconia on March 27, and April 9th he got to Pittsburg.

Q. 32. What did you see there at the Pressed Steel Car Company's works?

Mr. Phillips: May it please your Honor, I want to enter my objection. This all relates to things that this witness saw after the filing of the bill of complaint?

The Court: To be sure, and it is not as probative. It has a different relation. But it is certain circumstantial evidence, and
78 subject to your objection. I do not know how it will work out. I will admit it de bene subject to your objection. If it is connected, it will become material; but I ought not to deprive the complainants from receiving circumstantial evidence to prove certain matters relating to contributory infringement.

Mr. Phillips: I dislike to make objections, but I must to save my rights in the matter.

The Court: Certainly.

Q. 33. Now, proceed and tell us what you saw there at the Pressed Steel Car Works on April 9th, 1914?

A. I saw cheek castings exactly as represented on this structure (indicating)——

Mr. Neave: Plaintiff's Exhibit 5.

The Witness: And separator castings being assembled with the other component parts which go to make up the complete structure which I saw at Laconia.

Mr. Phillips: I object to the answer as merely stating a conclusion.

Q. 34. You examined this complete structure as you saw it made at the Pressed Steel Car Company's Works?

A. I did.

Q. 35. And was the structure exactly the same as seen at Laconia?

A. Identical.

Q. 36. Did you, while you were at the Pressed Steel Car Company's Works on April 9th, 1914, see any of these cheek plates and spacer blocks that were delivered there on that day, or being delivered on that day?

A. I did.

Q. 37. Where?

Mr. Phillips: I have my general objection to these questions?

The Court: Yes.

Mr. Phillips: Exceptions to stand to all this line?

The Court: Yes.

79 Q. 38. Where did you see those parts?

A. At a place very near the actual work of construction a railroad car was, I might say, placed, and the work of unloading this car was accomplished by several laborers. This work of unloading I witnessed. The car contained a shipment of cheek castings and separator blocks.

Q. 40. Did you examine those cheek castings and separator blocks?

A. I did.
Q. 41. Were they like or unlike the parts shown on two of the drawings attached to the interrogatories?
A. They were identical.
Q. 42. And was there any mark on these castings?

Mr. Phillips: I object.

A. There was.
Q. 43. What kind of markings were there?

The Court: He may answer subject to the objection.
Mr. Phillips: It seems to me that is pretty secondary evidence.
The Court: He may answer subject to the objection.

A. The marks consisted of the inscription "14-P-1", and also the letters "B" & "M."
Q. 44. Were there tags attached to those castings?
A. There were.
Q. 45. What was on those tags?

Mr. Phillips: I object to it as secondary.
The Court: He may state whatever he saw.

Q. 46. Can you produce one of those tags?
A. I can.
Q. 47. Well, do that then; that will show.

(Witness produces tag.)
Mr. Neave: I offer this in evidence as Plaintiffs' Exhibit
80 No. 7.
Q. 48. These are tags that were on these cheek plates and spacer blocks?

Mr. Phillips: This is subject to my exception.

A. Three of them, as noted on those tags on the back, were removed from cheek castings, and one removed from a separator block.
Q. 49. And you saw these castings taken from a car into the Pressed Steel Car Company's works some place?
A. I did.
Q. 50. And where were they put?
A. They were piled in a spot very convenient to this work.
Q. 51. Were they piled with other similar castings?
A. They were.

Mr. Neave: That is all of the direct, Mr. Phillips.
Mr. Phillips: In view of the character of the witness' testimony, I do not care to cross-examine.
Mr. Neave: Your Honor, as far as I know, the practice on interrogatories is not very well settled, and I do not know, as a matter of fact, whether the interrogatories and the answers together should be offered in evidence; but, in order that there shall not be any question about their being in, I suggest we do offer them in evidence and then they are surely there.

The Court: I suppose it is very much the same as in admiralty cases. They are regarded in in two ways. They are regarded as a part of the pleadings and as a part of the testimony. You may offer them.

Mr. Neave: I offer in evidence the Plaintiffs' interrogatories and the defendant's answers thereto as Plaintiff's Exhibit No. 8.

The Court: Any objection to them? The interrogatories and answers are offered in evidence.

Mr. Phillips: Not the slightest.

The Court: Admitted without objection.

Plaintiffs rest.

81 *Plaintiffs' Rebuttal Proofs.*

Whereupon the following evidence was produced and offered on behalf of the Plaintiffs, in rebuttal.

By Mr. Neave: Your Honor, the first witnesses the plaintiff will call in rebuttal are fact witnesses, with reference to Mr. Byers' date of invention. Mr. Byers, to whom the patent in suit issued, will be the first witness.

JACOB J. BYERS, one of the Plaintiffs, called as a witness on behalf of the Plaintiffs, having been first duly sworn, testified as follows:

Direct examination by Mr. Kerr:

By the Court: What is your name?

A. Jacob Jacobson Byers.

Q. 1. You reside at Chicago, Illinois, Mr. Byers?

A. I do.

Q. 2. What is your occupation?

A. Salesman, and mechanical expert, for the National Malleable Castings Company.

Q. 3. Will you state what, if any, experience you have had in railroad work?

A. I had eighteen years, with the C. B. & Q. Railroad.

Q. 4. And what sort of work was that?

A. Inspection and repairing, and taking care of repairs of cars.

Q. 5. What period did this cover?

A. It covered from the year of 1889 to 1907.

Q. 6. At what place or places did you work, during this period?

A. At Cameron, Missouri, except three or four months when I was employed at St. Joseph, Missouri, for the same company.

Q. 7. In whose employ have you been since 1907?

A. The National Malleable Castings Company.

Q. 8. One of the plaintiffs to this suit?

A. Yes, sir.

Q. 9. Are you the other plaintiff in this suit?

A. I am.

82 Q. 10. Will you please state the manner in which you first became interested in draft rigging of the type shown in the patent in suit?

A. When I first conceived the device now in question, we had occasion at Cameron, Mo., where I was employed, to replace a broken draft spring in Coach No. 1, and this was in the middle part of February, 1899.

Q. 11. And what had the replacing of this draft spring in this Coach No. 1 to do with the idea of the patent, the construction of the patent in suit?

A. This coach, in particular, had draft lugs, which were solid at the bottom; that is, instead of having a plate or a loose strap at the bottom there was a solid flange cast on to the lug plate itself, which meant that in order to replace the spring it was necessary to lower or take down those lugs as well as the yoke and coupler, in order to get this spring in.

Q. 12. What, if anything, did you do as a result of this difficulty about taking out this draft spring?

A. I immediately set to work and sketched up the idea, which I later on patented; that is, I devised a pocket or lug casting, rather, as I may call it; and, instead of having the lugs on the side, I placed the lugs above and below; that is, I placed two above and two below, and instead of having the yoke fastened on above and below, as had been the practice for many years, I turned the yoke over; or, in other words, I placed it on the side, connected it on to the side, and by doing that that gave me an opening at the bottom, so that I could insert the followers and springs from underneath; and what I did, in connecting this yoke on, I connected it on with a key; that is, I made use of the M. C. B. slot, M. C. B. standard slot, that was in the coupler, I provided slots in the pocket castings, also, and inserted the key through from the side, which was a very easy manner of applying the coupler. That not only enabled an easy access to the followers and springs, but it enabled me to change the coupler within a —well, in a few minutes' time, where ordinarily it would take some times two or three hours. And, of course, in connection with that—

that is, so far as the springs and followers are concerned, in-
83 stead of laying the followers on the edge I put them on their end, and I placed one spring above the other, and between the springs I provided a projection on the followers; the projections were to keep the springs, keep them in line, and to prevent the coils from rubbing against one another, so as not to obstruct the compression or release of the springs. Then underneath the followers and springs I placed a plate, the plate to hold up the followers and springs; this plate I fastened on, that is, on my first model I had quite a lot of difficulty in getting the plate to suit me just right, but on this first model I had lugs. I had three lugs on the side; I had three lugs on the pocket itself and I had three lugs on the plate; that is, lugs extending downwardly. And through those lugs I had bolts, that is, I applied three bolts crosswise underneath the plate; that was the support for the followers and springs. Also, I provided a shelf under the yoke, a shelf above and below, in the construction, so as to have something to guide the yoke, on the sides. Of course, before I made this model I made a rough sketch.

Q. 13. And when was it that you made this rough sketch?

A. That was directly after the experience I had had. Possibly the latter part of February.

By the Court: What year?

A. Of 1899.

Q. 14. And did the sketch embody the idea which you have just described?

A. It did.

By Mr. Phillips: I object, may it please your Honor. That is a mere statement of a conclusion. And I would like to have him describe the sketch or produce it.

Q. 15. What has become of the sketch?

A. Well, I did not save the sketch. After I made the model, why, I destroyed the sketch. I could not say——

Q. 16. And when did you make the model that you are
84 now referring to?

A. Oh, I made that in March, somewhere in March.

Q. 17. Of what year?

A. 1899.

Q. 18. Will you now describe that model?

A. I will. Well, I have just described it. I will describe it again,—pardon me. Instead of having lugs on the side, of this pocket, or pocket, I provided a pocket, and instead of having lugs on the side of the pocket, or in the side of the pocket——

(Conference between counsel, witness suspending answer).

Q. 19. Just to shorten things, does the description which you have just given apply to the model?

A. It does; yes, sir.

Q. 20. That is, to the first model?

A. Yes, sir.

Q. 21. Which you made in March, 1899?

A. Yes, sir. I mentioned the first model, as I remember, in that——

Q. 22. How large was this model?

A. Well, I had the model with a short piece of the shank, that is, representing a short piece of the coupler shank; and with that piece and all it was probably sixteen inches long, and eight or nine inches high, and four or five inches wide.

Q. 23. After you made this model, what did you do?

A. I proceeded to get some one interested in it.

Q. 24. When did you first talk to any one about your idea?

A. In the month of March, 1899.

Q. 25. To whom did you talk about your idea that you have just described?

A. The first man that I talked with was a man by the name of Marion Easter, who was employed there at that time, and who was very close to me; he was a partner, in a way, in the way of doing the work around there. Marion Easter is not alive, however; he had the misfortune of being killed right in the same yards four or five years ago.

Q. 26. Who else did you talk to, and when?

A. In March I also talked with Mr. John F. McGill, who was yardmaster at that time at Cameron, Missouri.

85 Q. 27. And you told him about the device?

A. I told him about the device. I showed him the model.

Q. 28. Who else did you talk to in March, or thereabouts?

A. E. N. Byers, who was the foreman at that point.

Q. 29. And who else did you talk to at about that time about this device?

A. I talked with Mr. George White, who was also a man in the employ there, possibly in May, or probably a little later; somewhere along there; he was a man who came to work there, and it was not very long, anyway, after he had been employed, or had started employment there.

Q. 30. You spoke of trying to get some one interested in that device. Who did you——

A. Well, I tried to get Mr. McGill interested.

Q. 31. Did Mr. McGill become interested?

A. Well, he did, yes, for the time being, yes.

Q. After the completion of this first model, what did you do about working on the device?

A. Why, I was not satisfied with the way,—with the type of plate, the plate that I had at the bottom for supporting the followers and springs, and I changed that about; in fact, I had three different methods of doing it; I was working on that for some little time.

Q. 32. Did you work out a satisfactory way of attaching the bottom plate?

A. Yes, I did.

Q. 33. Did you apply it to your model?

A. I did.

Q. 34. And what did you do then?

A. I made a second model, later in the summer, or in the fall of the year, and there I applied a key, in very much simpler way.

Q. 35. What do you mean by a key?

A. Well, I mean, it was a plate, but it was in the form of a key, for the reason that I ran it through slots that I provided underneath the lugs, and that did away with the bolts; all I needed was the plate, and a couple of cotter keys, to keep it in there.

Q. 36. You mean a bottom plate?

A. A bottom plate. Oh, yes.

Q. 37. In the form of a key?

A. A bottom plate; but it was in the form of a key, you understand; it was a bottom plate, for the purpose of holding the

86 spring and followers.

Q. 38. Will you now describe this second model?

A. This second model was a wooden structure, made of mostly half-inch material.

By the Court: Made of what?

A. Half-inch material; the stock was about half-inch. Part of that model was made out of a goods box; that is, especially the yoke was, out of a piece of board taken from a packing box. This model

I had provided;—as I said before I had two lugs above and two below. This happened to be a single pocket, and I provided, in the side of a pocket, slots, and I placed the yoke on the side of the coupler instead of above and below, as was ordinarily done. I provided followers—instead of having them lying on the side, I set them on their end. I provided two springs, one above the other. The springs were guided by the projections that I had provided on the followers; and, of course, the springs and followers were held up in place by the bottom plate that I just mentioned as a key. This plate or key was inserted through two slots, each slot under, pretty much directly under each lower lug. And in the end of this key, that I sometimes call a plate or key, I had a hole for a cotter key, that is, in the open end of it. The rear end of it was provided with a sort of a shoulder, you know, so that I would not shove it all the way through; in fact, I had two keys, one in front of each of those slots or lugs.

By Mr. Kerr:

Q. 39. Have you described how the coupler and the yoke were secured together?

A. Yes. The yoke was fastened on to the side of the coupler by means of a cross-key. This key extended through the pocket, the slots in the side of the pocket, and through the M. C. B. standard slot in the coupler shank, as well as the yoke.

87 Q. 40. In this second model, how were the springs represented?

A. They were represented with round wooden blocks. The blocks, each one of them, had a hole in it to represent the hole that would ordinarily be in a coil, a set of coil springs.

Q. 41. And, going back for a moment to the first model, in what way were the springs represented in it?

A. They were brass springs.

Q. 42. I hand you herewith a model, and ask you to state when you first saw this.

(Model handed to witness.)

A. I saw this when I made it. I know pretty much—I know all about this.

Q. 43. Well, when did you make it?

A. This was made in the early part of December, 1899.

Q. 44. Is the model in the same condition in which it was completed in December, 1899.

A. Well, it has had a coat of paint since I saw it. That, with the exception of, of course, part of this is gone (indicating)—of course, what I mean, I see here is a new follower; this follower had been lost, and a substitute made (indicating); and here is the slots that I mentioned; this is one of the slots here; now, over here was the other one (indicating); but this has been broken off; that is a part there, similar to this here (indicating), has been broken off on this side (indicating), and the key is lost; the key is not here; that is, the plate or key, as I call it underneath, is lost, missing.

Q. 45. And this is the second model you spoke of?
A. This is the second model; yes, sir.
Q. 46. After you completed this, in December, 1899, what did you do with it?
A. I wrote a letter to the National Malleable Castings Company, if they were not interested in something of this kind.
Q. 47. I show you——

By the Court: If he is going to quit that model, the record does not show what it is. You have not identified it or marked
88 it for identification.

By Mr. Kerr: It is offered in evidence, as plaintiff's Exhibit No. 10, Byer's Second Model.
By the Court: No objection, I suppose.

Q. 48. You spoke of——

By the Court: Wait a minute.
(No response.)

Q. 48 (continued). You spoke of writing to the National Malleable Castings Company, and I herewith hand you a letter dated December 5, 1899, and ask if you wrote that letter to the National Malleable Castings Company?

(Letter handed to the witness.)

A. I did, sir.
Q. 49. And when did you write this letter?
A. I wrote that letter on December 5, 1899.
Q. 50. And did you receive a reply thereto?
A. I did.
Q. 51. Have you looked for—have you tried to find the reply?
A. I have.
Q. 52. Have you been able to do so?
A. I had a lot of those letters for several years, but I finally got pretty well filled up with correspondence of that kind, and I destroyed them.
Q. 53. Do you remember the substance of the letter?
A. I do.
Q. 54. I hand you herewith a letterbook of the National Malleable Castings Company, and show you herewith a letter on page 333 thereof, that is, a copy of a letter, and ask you if you received the original of this letter.

(Letterpress book shown to witness.)

A. I did.
89 Q. 55. In reply to your letter of December 5, 1899?
A. I certainly did.

By the Court: Is that a letterbook containing copies of letters which he received?
By Mr. Kerr: He said he could not find the original, your Honor.
By the Court: Oh, this is a copy book of some other——

By Mr. Kerr: Of the National Malleable Castings Company, to whom he wrote.

By the Court: Oh yes.

By Mr. Kerr: The letter is marked, for identification, as part of Exhibit 11.

Q. 56. After receiving this letter from the National Malleable Castings Company, of December 7, did you write to them?

A. I did.

Q. 57. And I hand you herewith a letter dated December 9, 1899, and ask if you wrote that letter to the National Malleable Castings Company?

(Another letter handed to the witness.)

A. I did.

Q. 58. And on what date?

A. On December 9, 1899.

Q. 59. Did you receive a reply from the National Malleable Castings Company?

A. I did.

Q. 60. Have you looked for the original?

A. I have.

Q. 61. Have you been able to find it?

A. No, not able to find it. It was destroyed with the other letter.

Q. 62. Do you remember the contents of that letter?

A. I do.

Q. 63. I hand you herewith the letterpress book of the National Malleable Castings Company and ask you if this is a copy of the letter which you received from the National Malleable Castings Company?

90 (Letterbook handed to witness.)

By Mr. Phillips: Has that been qualified? What was the question before that?

(Last testimony read.)

By Mr. Phillips: Yes.

A. It certainly is.

Q. 64. I hand you herewith a letter dated December 17, 1899, and ask you if you wrote and sent that letter to the National Malleable Castings Company?

(Another letter handed to witness.)

By Mr. Phillips: Have you copies here of the letter-press letters?

By Mr. Kerr: Of everything.

By Mr. Neave: Have you a copy for the Court?

By Mr. Kerr: Here are copies of those letters, your Honor (Handing same to the Court).

A. I wrote this letter.

Q. 65. When?

A. On or about December 17.

Q. 66. This letter of December 17 states: "I have your letter of the 11th. I send you to-day a model of my draft rigging device." What model is this that you speak of?

A. That is the second model.

Q. 67. You mean Plaintiffs' Exhibit No. 10?

A. That is it.

Q. 68. Byers' Second Model?

A. Yes, that is it; yes, sir.

Q. 69. I hand you herewith a letter dated December 26, 1899, addressed to National Malleable Castings Company, and ask you if you wrote and sent that letter on or about December 26, 1899?

(Another letter handed to witness.)

A. I did.

Q. 70. I call your attention to sketches on the second and third pages of this letter—they are not there, your Honor (indicating copy handed to the Court)—and ask you if you made these sketches?

A. The sketch on the second page I do not seem to—I do
91 not know just what that is, and I do not think it was made by me. It possibly was made by some one connected with this National Malleable Castings Company, after they received my letter; but the sketch on the third page I made—the sketches on the third page I made, all of them.

By Mr. Kerr: Do you wish to see them, your Honor? (Handing same to the Court.) They show the riveted form of yoke shown in Figs. 6, 7 and 8, I think, of the patent.

By the Court: Is this the identical one he made?

By Mr. Kerr: No. This is the original that he made (Indicating).

By the Court: That he made?

Q. 71. You actually made this sketch, yourself, did you?

A. I did.

Q. 72. And enclosed it with the letter of December 26, 1899?

A. I did.

By Mr. Kerr: I offer in evidence, as Plaintiff's Exhibit No. 11, the letterpress copies of the letters from the National Malleable Castings Company to J. J. Byers, dated respectively Dec. 7 and Dec. 11, 1899, and also the letters from Byers to the National Malleable Castings Company, dated respectively Dec. 9, 17 and 26, 1899.

By the Court: No objection, I suppose?

By Mr. Phillips: I did not hear.

By the Court: No objection, I suppose—original letters.

By Mr. Phillips: I do not think so.

By the Court: Admitted.

Q. 73. After you sent this model to the National Malleable Castings Company, on Dec. 17, 1899, what did you do?

A. I went to Chicago, and called on the National Malleable people, the company.

92 Q. 74. And what was the result of this call?

A. The result was that they were interested in my device.

Q. 75. And after this what happened?

A. At the time I was there we arranged for patent papers to be drawn up. This, however, was not done until I made a second call there, in January, 1900, some time in January, 1900.

Q. 76. Where has this model been since you sent it to the National Malleable Castings Company on December 17, 1899?

A. It has been in the possession of the National Malleable Castings Company, and their attorneys.

Q. 77. What do you mean—their attorneys?

A. Their patent atorneys, who had to do with taking care or procuring the patent.

Q. 78. Oh, you mean it was sent to the patent attorneys so they could draw the application?

A. Yes.

Q. 79. For your patent?

A. That is it.

Q. 80. Do you know where the model was procured from to bring to this trial?

A. It was procured in a model room or pretty much a storage room of patterns and models of the National Malleable.

Q. 81. Where?

A. In Chicago.

Q. 82. And how was it found?

A. It was found pretty well hid away. It seems as though it had been lost track of under a lot of—well, it was found under a model of a platform of a car and it seems as though it was impossible to get hold of the thing; people had searched for it and I took it on myself to look it up. I searched two or three days for it and finally found it behind a platform but this is a place where I would say there are thousands of patterns and models in this room and I was the one that found it. Of course, after they had made patterns of the device, the model, I presume, was not of any particular interest to them, any more, so long as they had the working patterns.

Q. 83. Am I correct in understanding you that aside from the difference you have described with regard to the broken off slot and the lost bottom plate and the replaced follower, and the fact that the structure has been repainted, that it is in exactly the

93 same condition——

A. Exactly; absolutely.

Q. 84. —in which you took it to Chicago, or sent it to Chicago?

A. Yes, sir.

Q. 85. In December, 1899?

A. It is.

Q. 86. Defendant's witness Sandman has testified that if your rigging was used with American Continuous rods and the key connecting yoke and the coupler was removed, that the draft rods would fall to the ground. If you are familiar with the use of American Continuous rods, please state, if you know, what would happen in such a case?

A. Well, they would not fall to the ground. They possibly might sag two or three inches, but that is as far as they would go. They are supported,—for instance, if the key was to come out, of course there would be no connection at that point, but the rods there lay on top of the body bolster, or they go through a slot in the bolster, and they are supported at that point, and the distance between that and the key is only a few feet. It could not sag over,—I have never seen them sag over four or five inches, and I have had to do with many a one of them,—unless they got jammed up in some way, after the coupler was pulled out, or something of that kind.

Q. 87. How much of a matter would it be for a man to get those back into alignment with the slot for the key?

A. Why, it would be a very small matter. A man could do that very easily, with one hand.

Q. 88. I call your attention to Plaintiffs' Exhibit No. 9, and will ask you to state what you know about the two structures or castings which are secured to the beams of this exhibit.

A. Well, the pocket on this end is——

(Witness indicates.)

By Mr. Kerr: Indicating the end marked "1".

A. The pocket on this end is one of the pockets that was applied to the way car caboose on the C. B. & Q. system at St. Joseph,
94 Missouri, in the year—that is, it was in January, somewhere in January, somewhere near there; possibly a little later, the year of 1902. Now, there is some correspondence here on this. I think that is right, though, 1902. There are some letters on that. Isn't that right?

By Mr. Neave: I suggest the witness go on with his answer, and we will get the date in later.

Q. 89. Just describe the use of this casting at the end marked 1 of Exhibit 9?

A. It is the draft lugs, as I call them. It is the same purpose as the cheek plates or lugs, draft lugs on the car. It is the part against which the followers bear. It is the part attached to the frame of the car, to the center sills of the car, and into which the yoke of the coupler is inserted, and into which the followers and springs are inserted. It is the connecting casting between the followers and springs and the sills.

Q. 90. Well, what part of this thing has been in use?

A. The pocket only, only the pocket.

Q. 91. And how long was it in use?

A. That was in use for two years possibly three, but I am positive of two.

Q. 92. And why was it taken out of this caboose?

A. This caboose, as it happened, was in a collision and was broken in two in the Brookfield yards, Brookfield, Missouri, and when I heard of the car being broken in two I was interested in knowing how the draft gear came out, and so I wrote the Master mechanic at that

point to ship me the castings, which he did, and this is the one (indicating).

Q. 93. And this was made by the National Malleable Castings Company?

A. Yes, sir.

Q. 94. Was it?

A. Yes, sir; along with several others, of course.

Q. 95. And you arranged to have them installed on the Burlington system?

A. I did.

Q. 96. I call your attention to the casting at the end of
95 the Exhibit 9, that is, at the end marked 2, and ask you to state what this casting is, and when it was made, if you know?

A. This casting was made—this casting was made in nineteen hundred—well, I tell you, this casting was made shortly after I came to the National Malleable Castings Company, which was in 1907. It was possible that this was made in 1908, somewhere.

By Mr. Kerr: Your Honor, I think it is a matter of comparatively small importance as to the date, but I have some correspondence indicating that in January, 1902, the device at the end marked 1 was sent to the St. Joe Railroad, Burlington System.

By the Court: You offer it?

By Mr. Kerr: I am simply submitting it to the counsel. I do not think it is a matter of importance enough to put in evidence.

By the Court: Put them in. You can withdraw them later. It will do no harm.

By Mr. Phillips: I didn't understand Your Honor.

By the Court: He can offer them and put them in, and counsel can examine them. You do not have to take the time now.

By Mr. Phillips: That will be perfectly satisfactory.

By Mr. Kerr: Yes; I ask that these letters be marked Plaintiffs' Exhibit No. 12, for identification.

Q. 97. You spoke of the casting at the end marked 2 of Exhibit 9 being made in 1908. Were castings of this sort applied to cars?

A. Yes.

Q. 98. How were the couplers and yokes secured together?

A. With a key.

Q. 99. Was the key applied to the car in the same manner as is shown in this rigging at the end marked 2 of Exhibit 9?

A. No, not exactly. There was only a short key used, and a short key was held in position by a cotter key on each end down the
96 side, the outside of the yoke; right in here (indicating). The yoke was closed over similar to this, as it is on the other end.

Q. 100. Is the National Malleable Castings Company in the draft gear business; that is, in the business of selling draft gears to railroads?

A. No, they are not.

Q. 101. What is their business connected with draft gears?

A. Their business is to supply parts—supply castings.

Q. 102. To whom?

A. Well, customers; various customers.
Q. 103. You mean to railway specialists?
A. To people handling railway specialties; yes sir.

By Mr. Kerr: I offer Exhibit marked No. 9 for identification in evidence as illustrative model, with full sized pocket castings attached thereto.
By the Court: Well, that is all.
By Mr. Kerr: You may cross-examine. Oh, there is just one more question I would like to ask, your Honor.

Q. 104. Who went with you to Chicago in December, 1899?
A. Mr. John F. McGill.

By the Court: Now, you may cross-examine, if that is all, Mr. Kerr.
By Mr. Kerr: That is all.

Cross-examination by Mr. Samuels:

X.Q. 105. You have referred to a sketch which you say you made in March, 1899. Have any way of fixing that date in your memory? Why do you say it was March, 1899? Do you remember anything else that——
A. Well, I had the idea of this gear worked out in my mind the latter part of February, and immediately went to work and made a sketch of it, rough sketch.
X.Q. 106. That was a matter of some fifteen years ago.
97 Do you remember other things that occurred fifteen years ago as clearly as you say you recollect this?
A. Well, I wouldn't say that I could, no, not without giving it some thought. I have given this considerable thought.
X.Q. 107. What has become of the sketch?
A. The sketch has been destroyed. After I made my first model I destroyed the sketch.
By the Court: That was March, 1899?
A. 1899.
By the Court: The second model produced here was similar, you say?
A. Yes sir.
X.Q. 108. When do you say you made the first model?
A. I made the first model in March, 1899.
X.Q. 109. That model is not in existence? You haven't it here?
A. No, that model was destroyed after this second one was completed, because it was a pretty rough affair, you know. It was the same as that, except it was pretty rough. That is rought enough, but that was still worse.
X.Q. 110. That model was a single pocket casting?
A. It was a single pocket casting, yes, sir.
X.Q. 111. The yoke was riveted to the draw-bar, as you say, in your letter?
A. No, no. That model had a key. Of course, I suggested rivet-

ing. Some people thought it would be well to provide for rivets if you wanted it, but that model was exactly the same as this later model except the bottom of it was different.

By the Court:

Q. Except the what?

A. Except the plate for holding up the springs and followers was different.

By the Court: The bottom plate?

A. The bottom plate, yes, sir.

X.Q. 112. You say somebody suggested that should have a key?

A. No, no. Somebody suggested it would be well to show
98 it with rivets in the patent office drawing, as well as a key.

X.Q. 113. Then the illustration in the patent is not entirely your invention. It is partly things suggested to you by somebody else?

A. Well, that was an old form of riveting on the yoke. There was nothing new about that that I could see. That was the trouble we had had, was with rivets. What I did was to get something better than the rivets. The rivets are what gave me the trouble.

X.Q. 114. Wasn't the key also an old form?

A. The key was not an old form with a yoke.

X.Q. 115. But what you describe in your letter to the National Malleable Castings Company is a rivet yoke?

A. I described that to be used on furniture cars where the draft gear was attached to the sills directly and not to the draft timbers, because on cars of that type you couldn't very well apply a key because you didn't have the room for the intermediate sills, see, so I suggested a key to them so that in case anybody wanted to use it on a low hung car or furniture car they could get along with that short key. I described my model in my first or second letter, which model you see right there just as it is, but this was a suggestion I made a little later on.

X.Q. 116. Was this first model like this model, Defendants' Exhibit No. 10?

A. Exactly, except the bottom plate was different. Outside of that it was exactly the same.

X.Q. 117. It didn't have this means for supporting the followers?

A. Not as it is shown there, no.

X.Q. 118. In the patent you show a rivert connecting the key, which you say—a key connected by means of rivets to the yoke which you say was suggested to you?

A. No, that was not suggested to me, not the key.

X.Q. 119. And the key connected by means of a yoke upset at the ends and an American continuous. That is all you show?

A. Yes, but—

X.Q. 120. Now, if you had the long key in mind, why didn't you show it in your patent?

A. I did.

X.Q. 121. With the American continuous?

99 A. With the yoke.

X.Q. 122. Is the American continuous a prior patent?

A. They were at that time. They were extensively used, and if people wanted to make use of them they could. That is why I provided for both. At that time there were nearly as many American continuous riggings in use as there were any other kind, and that is why——

X.Q. 123. If you had any different conception of a different structure, why didn't you bring it out in your patent, and have your attorney illustrate it? This model——

By the Court: Is that all?

By Mr. Samuels: I believe he hasn't answered that question.

A. What is that? I didn't get that.

Mr. Samuels: Read it.

(Question read.)

A. Well, the patent certainly claims a yoke connected onto a coupler with a key, doesn't it? With a cross key, key running through slots in the pocket castings.

X.Q. 124. Do you consider yourself capable of understanding a claim?

By Mr. Kerr: I didn't get that question. Your Honor.

(Question read.)

By Mr. Kerr: I object to that as an unfair question Your Honor.

By the Court: No.

By Mr. Kerr: He hasn't been put on to explain his patent or to interpret——

By the Court: If he isn't acquainted with that sort of thing, let him say so. You mean the term of "claim" in a patent?

By Mr. Samuels: Yes, your Honor.

By the Court: Well, answer.

A. Well, possibly I am not clear on that. That is about

100 the only answer.

X.Q. 125. This model shows a long flat key extending out from the sides of the pocket casting at least two inches. The casting is on a small scale. Now, can you explain any function for that extension, any reason for it, other than the use of American continuous rods?

A. Why, I wanted it, just as is shown here, to go through the draft timbers. It is supposed to represent the space that is required for the width of the draft timbers, that is, it is a space on each end.

X.Q. 126. Is it not a fact that you had the American continuous rods on that model?

A. I showed it—I didn't have it on that model, no, no. No, I never had rods on that model.

X.Q. 127. Why didn't you illustrate that model in the patent?

A. It is illustrated.

X.Q. 128. On what figure?

A. In every one.

X.Q. 129. Did you ever manufacture one of these or have one of them manufactured in operative form?

A. Certainly did.

X.Q. 130. When?

A. The first one was made in January, 1902, that is, there were several of them made.

X.Q. 131. Is that the one you have here, the model, defendant's Exhibit 9?

A. That is this (indicating).

X.Q. 132. How many of these were made?

A. There were six made that I know of, possibly more. I know of six.

X. Q. 133. Any others manufactured in this form? Just six of them?

A. Exactly that form. There were others made in this (indicating), in the other form.

X.Q. 134. Referring to the end of model marked 2.

A. Yes, sir. that is right.

X.Q. 135. How many of those?

A. There were four; at least four.

X.Q. 136. When were they made?

A. In about 1908.

X.Q. 137. Why didn't you have any more of them made?

A. Well, we were not pushing draft gears at that time.

101 X.Q. 138. I presume you would not have furnished them if anybody had come to you and tried to buy them of you?

A. I do not think so. No, I do not think we would. We were only experimenting.

X.Q. 139. Then you did not consider it a commercial proposition at that time.

A. Yes, we did.

X.Q. 140. But still you wouldn't sell them?

A. Why, I do not think that we figured it would be good policy to sell them, for the reason that we had customers who gave us tonnage, and if we were to enter the field of selling draft gears we would be competition for them, and that probably wouldn't be very profitable; possibly we might lose some trade in that way.

X.Q. 141. Your letters which you have put in evidence relate to the use of these draft gears on cars, and apparently in the way of soliciting business, is that not so?

A. Yes, but that didn't mean that we were anxious for it. Of course, we hadn't forgotten about it, but we were not actively pushing it.

X.Q. 142. Then, how do you reconcile the fact that you were offering them in the way of tests for the purpose of obtaining orders, and then you say—with the fact, which you state that you did not care to sell them?

A. Well, it was to our interest to know that our device was in every way practicable, and the only way we could know was to try

them out in service, and that was why we were anxious to have them tested out, as we did.

X.Q. 143. Are you employed by the National Malleable Castings Company?

A. Yes sir.

X.Q. 144. Are you acquainted with the device illustrated in Plaintiffs' Model Exhibit 5?

A. I am. I am acquainted with it.

X.Q. 145. Do you know anything about these castings? Did you ever see any of them at the National Malleable factory?

A. I have.

X.Q. 146. Can you say positively as to when you started to make them?

102 A. No, I cannot. It is probably four years ago, but I am not certain as to that.

X.Q. 147. And your patent is fourteen years old?

A. Yes, it is fourteen, I guess.

X.Q. 148. You say you have made about ten of these castings in the form shown in the patent, is that not so?

A. That is right.

X.Q. 149. And of these, known as the Miner twin spring, shown in Plaintiff's Model No. 5, how many have been made?

A. I do not know. I couldn't tell.

X.Q. 150. A great many of them?

A. A great many, yes, sir.

X.Q. 151. Could you make any statement as to the number of thousands, or estimate it, in a general way?

A. I wouldn't like to do that, for I am not in a position to say.

X.Q. 152. Referring again to the model which you say you made in the spring of 1899, what is the difference between that and the ordinary draft gear which you were presumably familiar with at that time?

A. Well, the ordinary draft gears at that time were the—where the yoke was applied above and below, which is yet the practice, and the yoke was fastened on the couplers with rivets, riveted onto the coupler with rivets. Those rivets gave a lot of trouble. The car would get a blow and then it would get a jerk. It would get a heavy blow and one rivet would break and fall out. Possibly the next day or two the car would get another one of those blows or jerks, and that would break another rivet, and out would come the coupler, which of course, was a failure, causing the breaking in two of trains and accidents of all kinds, derailments, frequent derailments. Cars would get in the ditch on account of it. I have been out many a time to pick them up when they were down in a ditch. And then they had wooden draft timbers in those days more than they have now. That doesn't mean to say they haven't got wooden draft timbers now. There are possibly as many cars in the country with wooden draft timbers as there are cars with steel sills to-day. Well, the wooden draft timbers, they would split and pull apart. The long yokes we had in there in those

103 days—the tendency of the long yoke riveted onto the coupler rigidly—the tendency would be to spread those draft timbers

apart, and when that occurred the followers would slide by the check plates with the lugs, and out would come your coupler, followers, springs and all, yoke and all.

X.Q. 153. Was the key new with you?

A. The key was absolutely new with me so far as using it in connecting a yoke onto a coupler, yes, sir.

X.Q. 154. And then you only show it in your patent in connection with the American Continuous?

A. I certainly show it in connection with my yoke.

X.Q. 155. The American Continuous was well known at that time?

A. It was.

X.Q. 156. And the use of horizontal key in connection with the American Continuous is well known?

A. That is right.

X.Q. 157. But you didn't differentiate from that in your patent?

A. I certainly did. I applied it to the yoke as I have it in my model here.

X.Q. 158. Then why does the statement appear in the patent, "I intend to make specific claim, in addition to my generic claims," referring back to the description of the American Continuous?

A. Yes, but don't I claim the yoke connected on the side of a coupler with the cross key also?

X.Q. 159. Which would show only the American Continuous in connection with key, isn't that so?

A. No, I show the yoke too.

X.Q. 160. In connection with a rivet key?

A. No, with a key, a cross key. It is there.

X.Q. 161. Show it to me in the patent?

By Mr. Kerr: I object to this cross-examination on the patent. It is not proper.

By the Court: Well, I think it is so far.

A. There it is (Indicating).

By Mr. Samuels: The witness points to figure 10 of the Byers patent in suit.

X.Q. 162. Can you deny that that shows American Con-
104 tinuous rods marked 19?

A. No, I cannot.

X.Q. 163. Are the riveted yokes which you referred to now in general use?

A. Well, there are a few left, but they are mighty fast getting to the Byers' idea of the key—connecting the yoke on to the coupler with the key.

X.Q. 164. Do you know anything about the number of them in use?

A. I wouldn't like to say that. There are thousands of them. I don't refer now absolutely to Byers construction. I also refer to the cast steel yokes which are being applied to-day, which are pretty much along the same lines.

By Mr. Samuels: I have closed, Your Honor.
By the Court: You have closed the cross-examination.
By Mr. Samuels: Yes.
By Mr. Kerr: Just one question.

By Mr. Kerr: Is it not a fact, Mr. Byers, that while you personally were desirous of getting your gears on the market, the National Malleable Castings Company was not particularly anxious to do so?
A. That is it.

By Mr. Phillips: I object to that as grossly leading.
By the Court: It is leading, of course, but I will allow it subject to your objection.
By Mr. Kerr: That is all.

105 EDWARD N. BYERS, called as a witness on behalf of the Plaintiffs, having been first duly sworn, testified as follows:

Direct examination by Mr. Kerr:

Q. 1. Your name is Edward N. Byers, and you reside at Cameron, Missouri?
A. Yes, sir.
Q. 2. You are general car foreman of the Burlington repair yards at Cameron, Missouri?
A. Yes, sir.
Q. 3. How long have you been in the employ of the Burlington?
A. Thirty-five years.
Q. 4. And have you been at Cameron all that time?
A. Thirty-five years; yes, sir.
Q. 5. Were you there during the years 1899 and 1900?
A. Yes, sir.
Q. 6. Did you keep any time books during that time?
A. I did.
Q. 7. I show you herewith two time books and will ask you if they are in your handwriting?
A. They are.
Q. 8. And show daily records?
A. They do.
Q. 9. For the years 1899 and 1900?
A. Yes, sir.

By Mr. Kerr: The two time books are marked for identification as Plaintiffs' Exhibits Nos. 12 and 13, Byers Timebooks.
By the Court: Do you offer them in evidence?
By Mr. Kerr: I will put them in evidence, your Honor.

Q. 10. Will you please refer to these timebooks and tell me when George White entered the employ——
A. The sixth day of March.
Q. 11. —of the Burlington, and when he left?
A. He left on June 3.
By the Court: When did he enter?

By the Witness: March 6, '99.
By the Court: And left?
By the Witness: On June 3, 1900.

106 Q. 12. You made the entries in those books, every day?
A. Yes, sir.

Q. 13. And they show the names of all the men who were employed under you?
A. Yes, sir.

Q. 14. Referring to the timebook, and for the month of February, 1899, I will ask you to read the note at the foot of the page under the date of the 15, 16 and 17 of February, 1899.

A. "Putting new wheels under No. 51, baggage-car"; and on the 16th: "Putting draw-bar in Coach 1." Then there is 1:40 A. M., and that is the time in the night that the men quit the work.

Q. 15. And can you tell what men worked on baggage coach 51 and car No. 1 on the 16th or 17th of February, 1899?

A. Marion Easter had eight hours on the coupler in the coach, and William Stuart and J. W. Shafin. Those three put the coupler in the coach, in Coach 1.

Q. 16. That is, they worked overtime on that day?
A. Worked overtime at night.

Q. 17. Was Jacob J. Byers, one of the plaintiffs in this suit, in your employ during '99?
A. Yes sir.

Q. 18. And what was his position under you?
A. He was inspector in repairs, a sort of assistant foreman.

Q. 19. Did he ever talk to you about some ideas he had about draft riggings?
A. He did.

Q. 20. When was that?
A. That was along in March, 1899.

Q. 21. And what did he tell you?
A. Well, he said it was an awful lot of work to put draw-bars up, if he had to take the lugs, as we call them, on the coach—they had bolts in each of the timbers, and had to take it all down and put it together and put it up by jacks. And he got an idea in his head he could overcome that. And along in, I think, during the middle or latter part of February, he went to work on a model in a tool car that belonged to our wrecking outfit, and he made a model and I looked at it, and it looked good to me, it looked as though we

107 would not have quite so much work getting them up, if we could get that thing in use.

Q. 22. You speak of lugs, do you mean cheek castings?
A. Well, that is your way of saying, but we call them lugs. I am going to stick to the old—to what we say over there, in calling them.

Q. 23. What was this model he showed you? Describe it, and what were his ideas?
A. Well, it was a yoke came around this way (indicating), with a key through a place up and down—down, with rivets or yoke bolts as they call them. The yoke came around (indicating).

Q. 24. Pointing in a horizontal plane?

A. Yes. Then he had two springs made out of brass. He had one spring above the other, and that caught my eye, and I thought that was very good, because I found that the ones with the two springs, that they always found on wooden cars, that the tension—it is a very curvy road we have—that the two springs in a curvy road, it would crack our draft timbers there, and by the one spring above the other it would not do that. That was my idea. I thought that was pretty good.

And then another thing, in a heavy shock of an engine or a jerk, it would have the same pull or push on both springs as one back of the other would not, I thought. And I thought it was a good thing. I paid no more attention to it, because I was very busy with my other work that I had to attend to.

Q. 25. And how was the yoke connected to the draw-bar?

A. That was so you could use what you call the American tail-end coupler, with a key, draft key, standard draft key.

Q. 26. You mean the coupler had a slot in it for the American Continuous bolt?

A. Yes. Then a yoke—in the yoke was a slot and it went in that way. (Indicating.)

Q. 27. That is, the key went through the yoke and the slot in the coupler horizontally?

A. Yes sir.

Q. 28. After you saw this model in March, or in the spring of 1899, what do you know that J. J. Byers did with it?

A. Well, that one, he put it away in the tool box, but he
108 goes to work along in the fall to make another one.

Q. 29. And did you see the other one?

A. I did. I did not see him make it because this was done—he had some help, and they were doing that after quitting time in the evening, but I saw it.

Q. 30. When did you see it?

A. Just before he went to Chicago with it.

Q. 31. What did he go to Chicago with it for?

A. Why, he had corresponded with the National Malleable Castings Company and they gave him some encouragement to come, and I sent for passes for him to go.

Q. 32. Describe this second model.

A. Well, that was a—something along—something like the first one, with the exceptions that underneath the first one had, as I understand it, bolts across to hold up the plate for the spring, but the last one had a plate, I think, with bolts. Otherwise, it was about the same as the other one, only it was a neater finish than the first one. The first one was clumsy but it showed the ideas. The last one was more neatly finished, but it had the springs—only it had the wooden blocks in place of the springs. The other one just had some little brass springs that showed, but this one had wooden blocks, to represent the springs.

Q. 33. When was it you saw this second model you have described?

A. Along the forepart of December, 1899, before he went to Chicago.

Q. 34. I show herewith Plaintiffs' Exhibit No. 10, and ask you if you can say when you first saw it?

A. That is when I first saw it.

Q. 35. You mean that this is the second model that you saw in December, 1899?

A. Yes, sir; that is the second model. This is new. (Indicating on model.)

Q. 35. Pointing to the unpainted follower?

A. Yes. It is the same, except that at that time it had a grey color, kind of represented kind of grey casting, but that is the one.

Q. 37. Well, are there any other changes besides the painting and this new follower?

A. (Examining model.) Well, there is a place – well, I will
109 tell you fifteen years is a long time to—and then see a thing again—the one he had—this is broke off here—with the exception of the plate underneath—the first one had bolts across it. Well, there are wooden blocks in place of springs in this one. Now, there might be some changes, I would not—this is the same key. (Indicating.) After he made the first model, I lost all interest in it; I paid no more attention to it. When he made that one, I did not see him work on it at all. It was done after quitting time. I knew he was working on it, but he kept it kind of secret. He was working in this tool car. Most of it was done by lamp light.

Q. 38. Why do you say you lost interest in it?

A. Well, I had too much to attend to, and if I began to get patents on my brains, why, I might lose my job, so I stayed with my job and let that business go.

Q. 39. Before that time you had lost money on patents, hadn't you?

A. Yes, I had lost money on patents.

Q. 40. A moment ago you referred to the wooden representation of the spring. Is that representation as it was when you saw the second model in December, 1899?

A. Yes. And this wood, he got that from the yard master. It was standing in the office, I think. He got that wood to make those things which represent the springs.

Q. 41. You mean, he got that from Mr. McGill?

A. Mr. McGill, yes.

By Mr. Kerr: Cross-examine.

Cross-examination by Mr. Samuels:

X.Q. 42. You say that Jacob J. Byers talked to you in the spring of 1899 about some idea he had of a draft gear?

A. Yes, sir.

X.Q. 43. How do you know it was in the spring of 1899 instead of in the fall?

A. Why, that was easy enough to know it was in the spring, because it was after the—it was in February when he worked
110 on that coach, and that is the time that he got talking about it, in February.

X.Q. 44. Do you recollect all incidents which occurred fifteen years ago?

A. No, but I remember a good many, and, of course, this book here is a good reminder, too.

X.Q. 45. And you are sure from the——

By Mr. Kerr: Just put in there "referring to Exhibit 12."

By the Court: Referring to Exhibit No. 12, go on.

X.Q. 46. How does that book enable you to say that in the spring of 1899 Jacob J. Byers disclosed to you some particular type of draft gear?

A. Well, it was after this work here that he was talking to me, along in March or February—March, 1899.

X.Q. 47. Then you have no particular way of connecting it with that book, you can merely say that certain entries there you think go to that time?

A. Yes. I made those entries at that time, and I know when he went to Chicago with it, that was in the Fall.

X.Q. 48. In the fall of 1899?

A. '99, and——

X.Q. 49. You are sure that he did something on it then?

A. He made a second one. He was bound to make the other one in the spring. He made two, and he made one in the spring and one in the fall of '99.

X.Q. 50. Because he made one in the fall and he made another one you are sure that the other one was in the spring?

A. Why, yes.

X.Q. 51. You say he made a model and then put it away in the—in some way?

A. No; when he was making this one he was kind of keeping this more to himself than the first one. He did not make much of an exhibit of it, that he was making it.

X.Q. 52. What became of the first model?

A. I do not know.

X.Q. 53. Could you describe it?

A. Well, it is something on the same order as that, excepting it was not as neatly fixed as this one.

111 X.Q. 54. You could not describe it?

A. Oh, yes. I described it here a while ago. It had a yoke the same as that, only a difference in the bottom. The one, I think, that he had there, had bolts across to hold the plate up, with the springs in, a plate with bolts in.

X.Q. 55. The other had bolts across the bottom, is that a fact?

A. The first one?

X.Q. 56. Yes, the first one was different from this in that it had bolts across the bottom?

A. That is about all the difference I could see in it.

X.Q. 57. How about the yoke, wasn't that rivetted to the draw-bar, or connected by an up-set key?

A. No, it was the same as this.

X.Q. 58. The American Continuous——

A. That was one of the keys that they used—the American Continuous fitted in there, a standard key.

X.Q. 59. But your recollections of that model are rather indistinct?

A. Well, they are pretty correct.

X.Q. 60. You could not describe it except by saying it is something like this?

A. Well, it is——

X.Q. 61. Could you have described it before you saw this recently?

A. Yes.

X.Q. 62. How long since you have seen this, previously to the last few days?

A. It is about fourteen years.

X.Q. 63. Do you think you could have described the other one independently of this model, say three months ago, without having refreshed your memory by this?

A. You see, this was in our way car——

X.Q. 64. What is that?

A. This was on the way car, in the Brookfield Division. (Indicating.)

By Mr. Kerr: Referring to Exhibit 9.

By the Witness: So I was bound to know what that was.

X.Q. 65. What you really recollect, in referring to this model, is that that is the casting which you saw on your cars in 1902?

A. No. As soon as I saw that I recognized it.

112 By Mr. Kerr: Pointing at Exhibit No. 10.

By the Witness: I could have picked that out any place in a bunch.

X.Q. 66. As the model you saw in the fall of 1899?

A. Yes, sir.

X.Q. 67. But you have said that you paid little attention to this model, that you were otherwise occupied?

A. Yes.

X.Q. 68. It was made at night and you were not present?

A. I did not bother any more about it.

X.Q. 69. How do you reconcile that with the fact that you say that you recognized this model immediately, after fourteen years?

A. Well, the reason I was not interested in it was simply I did not want to go into partnership on anything, as I was not financially able, so I did not put my mind on that any more, and after it was gone he got to handling it, why, of course I paid no more attention to it.

X.Q. 70. But your recollection of this model was indistinct, as you say, was it not? You saw but very little of it?

A. When they were making it?

X.Q. 71. Well, after that?

A. After that I saw it until he shipped it to Chicago. But when he was making it, I did not—I did not see it—I did not go into the car where he was working with it.

By Mr. Kerr: Witness pointing to Exhibit No. 10.

By Mr. Samuels: Cross-examination closed.

By Mr. Kerr: I have one more question, or two more, rather.

Redirect examination by Mr. Kerr:

Q. 72. You have spoken of the bottom of the first model being secured by bolts. In what way was it secured?

A. Well, they were cross-ways, ran cross-ways. I may be mistaken on it, but they ran cross-ways, two bolts, that is what I——

Q. 73. And could you take them out readily?

A. Yes. That was the idea, to have the spring and every-
113 thing go down, and you would not have to work two or three hours in putting up a draw-bar like you do now, and always have done.

By the Court: Anything more?

By Mr. Kerr: Just one more.

Q. 74. You have referred to this coach No. 1. In putting this draw bar in coach No. 1, in what way was this connected, in your mind, with what J. J. Byers told you about his ideas for a draft rigging?

A. Well, you see—we will say this is—here is the lug castings, they have two bolts down through the timbers here, and there is a lip comes over underneath, then they have what you call the lug bolts in here (indicating). Now, whenever there is a follower broken or a spring broken, you would have to take the nuts off of here (indicating), these two, and take the nuts off of these bolts here and get them off, and let the whole thing drop down. Then when you had it down, you would have to put your lugs together. At the center of the lugs there was a little bit of an off-set that we call a stem bolt—we call it that out there—that was to hold the lugs close together so they would not split, so the followers slip by the off-set in the casting—the whole thing would have to be put together, put up together. And also now, you take any freight car——

Q. 75. Well, did putting this particular draw bar in coach No. 1 have any connection in your mind with what J. J. Byers told you about his ideas for draft rigging?

A. Certainly.

Q. 76. And what period of time intervened between repairing Coach No. 1 and the time J. J. Byers explained his ideas to you?

A. That was probably a week or so, maybe two, I could not say, but it was along shortly before he goes to work and makes this model.

By Mr. Kerr: That is all.

By the Court: Call your next witness.

By Mr. Kerr: John F. McGill.

114 *Rebuttal.*

JOHN F. MCGILL, called by the Complainant, sworn, testified.

By Mr. Kerr:

Q. 1. Where do you live?

A. St. Louis, Missouri.

Q. 2. What is your occupation, Mr. McGill?

A. At present, grocery and meat market.

Q. 3. Do you know Jacob J. Byers, one of the complainants in this case?

A. I do.

Q. 4. When did you know him?

A. I have known him 17 years, while I was in service in the railroad, and since then.

Q. 5. You were in service on the Burlington, were you, for 17 years?

A. Seventeen years, yes, sir.

Q. 6. And you were yard master at Cameron, Missouri, from '95 till 1907?

A. Yes, sir.

Q. 7. And were you yard master at Cameron, Missouri, during 1899?

A. Yes, sir.

Q. 8. And 1900?

A. Yes, sir.

Q. 9. Did Mr. J. J. Byers ever talk to you about his ideas about draft rigging?

A. Yes, sir.

Q. 10. When was that?

A. Why, it was in the spring of 1899.

Q. 11. At what time in the spring?

A. The latter part of February or the first part of March, along in there.

Q. 12. Did Mr. Byers explain to you what his ideas were?

A. Yes, sir.

Q. 13. What did he tell you about it?

A. He told me he thought he had a good thing, and that—he really did not explain all the different parts of it, but he told me he was going to draw a sketch of it, and he could explain it to me better after he had drawn the sketch of it.

Q. 14. Do you remember having a conversation at any particular time when he told you what he intended to do, and at any particular period in the year?

A. Well, I do not believe there was a month passed in the
115 year from February or March of that year, but what something was said between him and me in regard to that—something was said between us in regard to this coupler—or this pocket.

Q. 15. Well, were there any particular weather conditions that you remember about the time of any of your talks?

A. Yes sir.

Q. 16. What were those?

A. Why, the first was in—he came to my office and asked me for material to do some drafting on. I noticed the condition—how he was dressed at the time, as being cold weather; he was muffled up in a kind of a canvass coat, and asked me for the papers to use—asked me what kind of paper I had that he could do some drawing on. As he entered into the office he had a piece of waste in his hand, wiping

his hands off, and walked along across the room to my desk, and I showed him then what I had on hand of the various kinds; and he picked up, I think, a few sheets and took them home with him, and in taking those sheets, he took them right by the corner and put them under his coat and went out across the yard.

Q. 17. Well, do you remember talking to him when there was snow on the ground, and out of doors?

A. Yes, on several occasions.

Q. 18. Did you examine any draft riggings?

A. Several times.

Q. 19. What did he say to you on those occasions when you were examining the draft riggings?

A. On one occasion, there were two or three inches of snow on the ground, and he said, "Mac, just wait a minute, let me show you this; here is a car, and I can explain it a little better if you get down underneath here and let me show you." I told him at that time I did not have time; I was in a hurry taking some numbers of cars, and I asked him if he could not wait until some other time when we could get over on the track—over on the repair track, where we could see—view the thing more plainly.

Q. 20. What did he tell you that he intended to do?

A. Why, he told me he was getting up a draft rigging.

116 On another occasion,—this is when he was on the coach track, you know,—he would pull his rule out and show me how the cars are erected—constructed then, and what a difference it would be, you know, with his contrivance; and what a difference it would make, you know, in the pulling and safety and quick service; in pulling out the draw bars and putting up the springs and followers, etc.

Q. 21. Now, just describe what he told you about his device, either in February or March, '99?

A. Why, I think he showed me forms that he had drawed first. I think I went over to his house one evening and seen some of his drawings; and then afterwards, in March, after the model had been constructed, or before it was complete, he came to me one time and he told me what a time he was having in trying to find something to represent the springs. I think that that caused him more trouble than any of the other parts that he put into this, to find something small enough, you know, to represent the springs in this pocket. Then finally one day he did come back over and his face was all aglow, and he said "Mac, I have got it." I said "What?" "Why," he says, "I have got just the thing now for them springs"—and showed me what he had, which was afterwards placed in the pocket.

Q. 22. And what were those springs?

A. Brass springs about that wide (indicating), or they were about that wide (indicating).

Q. 23. When was it that you saw this model?

A. Why, I guess I seen it, parts, all along there as it was made in March, '99.

Q. 24. Describe what it was like?

A. It was fifteen or sixteen inches long, four or five inches wide,

and seven or eight inches high, with two springs one above the other, and a follower on each end, and a plate underneath to hold the springs and the follower in position. The yoke, instead of being fastened on to the draw bar top and bottom, was reversed to the side horizontally, with an eye-hole which the key passed through,
117 the draw bar and the yoke being connected together by this key.

Q. 25. And were these parts in anything?

A. That was all parts of this model.

Q. 26. And what was the rest of the model like?

A. It was a little box-shaped—a little rough box-shaped concern about 18 inches long, as I say.

Q. 27 How was the plate?

A. The plate was flat, or was a solid piece clear across the bottom. You mean the bottom plate?

Q. 28. Yes, the bottom plate. How was it attached to the rest of the model?

A. I think it was attached with a bolt on each end. You open one end and it would drop down—everything would drop down; the springs and followers would fall to the ground.

Q. 29. How did that key which connected the yoke and coupler run?

A. Passed through the draft beams, through the yoke, through the stem end of the draw bar.

Q. 30. In what direction?

A. In a horizontal direction.

Q. 31. After Mr. Byers had shown you this model in March, '99, what did he *then* do then?

A. Well, I think he made two or three changes during the summer; that is, he changed this plate on the bottom of the pocket; I think he changed it two or three times; and then he told me one day that he was going to make a new model—make a nice one. He would finish it up in nice shape, you know, so he could present it for a sample.

Q. 32. Were you interested in this model at the time, or in this idea?

A. I was interested in that in '99, prior to the time he went to Chicago.

Q. 33. You made an agreement with Mr. Byers, didn't you, about the device?

A. I had a half interest in it.

Q. 34. And when, along toward the end of the summer, or whenever it was you say he decided to make a new model,—what happened then?

A. Why, he made a new model.

Q. 35. And what did he do with that model, this new
118 model?

A. That was the model we sent to Chicago for a sample, to illustrate the plate and pocket,—to represent and illustrate the pocket in Chicago.

Q. 36. To what place did you go in Chicago, or did you send to in Chicago?

A. The National Iron people there.

Q. 37. Did you go with Mr. Byers?

A. Yes, sir.

Q. 38. And you saw the National people with Mr. Byers?

A. I do not remember of seeing but one gentleman there—that is, in the office of the National Iron people—Mr. Mark, or some name like that—Mark; he was, I believe, the general superintendent of the National Malleable Construction Company.

Q. 39. Do you remember the date when you went to Chicago?

A. I think we left on the 22nd and arrived on the 23rd.

Q. 40. How do you fix that date?

A. Well, we got transportation, you know, to go to Chicago, and just a day or so before we went there I backed out, and told Jake I did not think I would have anything more to do with it. I thought we would have to wait too long before we would realize anything on it, but that I would go to Chicago with him, being that we had the transportation; and after he had interviewed Mr. Mark, why, I would pass over into Michigan, and make a visit over there.

Q. 41. And you spent Christmas day away from home that year?

A. In Michigan—Jackson, Michigan.

Q. 42. What was this second model like?

A. Why, it resembled the first one in all particulars, except the bottom plate.

Q. 43. Do not look at it now, Mr. McGill?

A. No, except the bottom plate; and the springs were made out of wood—which represented the springs, were made out of wood instead of brass, as in the old ones.

Q. 44. Were there any other changes in it, between the first and second models?

A. No other changes but the bottom plate, which was changed, and the springs were changed,—that is, it was a block of wood instead of the springs; and the bottom was a sliding key instead
119 of a flat plate, which extended over the bottom of the pocket.

Q. 45. I hand you herewith exhibit No. 10, and ask you if you ever saw this before (Showing same to witness)?

A. Yes, sir.

Q. 46. What is it?

A. Why, it is Mr. Byers' pocket gear.

Q. 47. When did you first see this?

A. Well, it may have been in November or December, 1899. I seen it during construction.

Q. 48. You mean this is the second model you have referred to?

A. This is the second.

Q. 49. And how does it differ? Is it in the same condition that it was when it was completed in November or December, 1899?

A. It resembles the other one——

Q. 50. No——

The Court: Well, is it in the same condition it was then?

A. No, sir; the spring in the former one——

The Court: No, no; is it now in the same condition it was when it was shown to you?

Q. 51. When this particular model was shown to you, in December, 1899?

A. This model, right here, is not in the condition it was when I seen it in 1899.

Q. 52. Well, explain what changes have been made in it?

A. This is the bottom of the model here,——

Mr. Kerr: Placing his hand on the open side.

A. The former model——

The Court: No, no; he is not asking you about the former model. He is simply asking you if that is the same as it was when you first saw it.

120 A. Oh, I see now. No, it is not. It is broken here, and it is broken here (indicating).

Mr. Kerr: Pointing to two places on the bottom.

A. This sliding key is gone from here; and a new plate in here.

Mr. Kerr: Pointing to the unpainted follower plate.

A. And besides, it has a coat of paint which is not the same as it was.

Q. 53. Was the model painted when you sent it to Chicago?

A. Yes, sir.

Q. 54. And what color?

A. It was a kind of grayish color.

The Court: Is that all?

Mr. Kerr: Just a moment, Your Honor; I think it is.

Q. 55. Did you furnish any of the material for this second model?

A. I believe I did.

Q. 56. What part?

A. I think it was the part they made the springs of, the wood; this wood they made the springs out of.

Mr. Kerr: Picking up one of the representations of the springs of this second model, Plaintiff's Exhibit No. 10.

Cross-examination by Mr. Phillips:

X.Q. 1. You say you owned a half interest in this Byers invention?

A. I did at one time.

X.Q. 2. What became of your half interest?

A. Why, we annulled it.

X.Q. 3. What do you mean by "annulled it"?

A. That is, we tore up the agreement.

X.Q. 4. Did you ever get any money for it?

A. No, sir.

121 X.Q. 5. Do you know whether Mr. Byers ever got any money for it

A. I do not.

X.Q. 6. You realize that these events, some of which you have been testifying to in great detail, happened fifteen years ago?

A. Yes, sir.

X.Q. 7. You have the reputation of having a good imagination?

A. I believe so; yes, sir.

Redirect by Mr. Kerr:

Re-d.Q. 1. Have you a recommendation, a statement of your service with the railroad?

A. I believe I have. (Producing paper).

The Court: I suppose you intended to put this in? This is not rebuttal. You intended to offer it in the first place?

Mr. Kerr: Yes, your Honor. I would like to have a compared copy, because doubtless Mr. McGill would like to keep this.

The Court: Very well.

Mr. Phillips: I cannot see the competency of it, but I do not know that it makes any difference.

Mr. Kerr: I offer it in evidence as Exhibit No. 13½.

The Court: But a copy; that is all.

Mr. Kerr: A compared copy of the letter of recommendation of the witness.

122 GEORGE W. WHITE, called by the Complainants, sworn, testified:

By Mr. Kerr:

Q. 1. Your name is George W. White?

A. Yes, sir.

Q. 2. And you live at Council Bluffs, Iowa?

A. Yes, sir.

Q. 3. What is your occupation?

A. At present I am working at bridge and building work for the North Western Railway Company.

Q. 4. Do you know Jacob J. Byers?

A. Yes, sir.

Mr. Phillips: What is this witness' name?

The Court: George W. White. What did he say his business was?

Mr. Kerr: He is working at bridge building.

The Court: Bridge builder?

Mr. Kerr: For the North Western Railway.

Q. 5. When did you first meet Jacob J. Byers?

A. It was in the year of 1899.

Q. 6. Whereabouts?

A. At Cameron, Missouri.

Q. 7. Did you do any work with Jacob J. Byers?
A. I did.
Q. 8. You were employed with Jacob J. Byers in the repair yards?
A. Yes, sir.
Q. 9. At Cameron, Missouri. Did Mr. Byers have any talk with you about a draft rigging?
A. Well, he did once, yes.
Q. 10. And when was that?
A. That was in the summer of 1899.
Q. 11. The summer of 1899?
A. Yes, sir.
Q. 12. What did he say?
A. He said he had some work for me that he wanted done.
Mr. Phillips: Will you please speak a little louder, Mr. Witness.
The Witness: Read the question, please?
(Question read.)
123 A. Why, he had some work he wanted me to do.
Q. 13. And what was that work?
A. Well, it was work concerning this draft rigging he has gotten out.
Mr. Kerr: What was the answer?
(Answer read.)
Q. 14. What sort of work?
A. Well, it was making a model of some kind.
Q. 15. Talk so the Judge can hear you. Did you do the work?
A. I did.
Q. 16. What did you make?
A. Do you mean after it was completed?
Q. 17. Yes, after it was completed?
A. A model of draft rigging.
Q. 18. Can you describe that model?
A. I can draw it easier than I can describe it.
Mr. Kerr: He says he can draw it easier than he can describe it.
(Witness draws sketch on a sheet of paper.)
The Court: He is a draftsman? You are accustomed to drawing?
The Witness: What is that?
Q. 19. You are accustomed to drawing?
A. Not very much.

The Court: The witness makes a sketch.
Mr. Kerr: The witness makes a sketch which is offered in evidence as Plaintiffs' Exhibit No. 14, White's sketch, Byers' Second Model.
The Court: The sketch is produced and marked.
Mr. Kerr: Yes, I marked it in evidence, your Honor, as Plaintiffs' Exhibit 14.

Q. 20. Will you please now point to the various parts shown in the sketch, as you point I will write their names?
A. Well, here is the spring. The follower, follower here; spring here; yoke here; draft key here; the key that holds the follower springs in here; stem of the draw bar. (Witness indicated the
124 various parts, and Mr. Kerr marked upon the sketch the names.)

Q. 21. What does this represent? (Indicating.)
A. That is the covering of the springs, on top. This outside (indicating) represents the body to receive the pocket casting.
Q. 22. And that is the construction which you built for Mr. Byers?
A. On that plan, yes, sir.
Q. 23. I show you herewith Plaintiff's Exhibit No. 10, and ask you if you ever saw it before, and when?
A. I have.
Q. 24. When did you see it?
A. In the fall of 1899.
Q. Under what circumstances?
A. I helped to make it.
Q. 26. This is the model you have just described?
A. This is the model, yes, sir.
Q. 27. Is it in the same condition it was when it was completed in the fall of 1899?
A. No, it is not. It has a coat of black paint. I did not have that when I saw it last.
Q. 28. What color was it when you saw it last?
A. It was a wood color. Of course, there has been a part broke off (indicating); and this busted here (indicating).
Mr. Kerr: Pointing to two points on the bottom.
A. Where the bottom key goes in, that holds in the springs and followers.
Q. 29. Are there any other differences?
A. None that I can see.
Q. 30. Otherwise, this is the identical model?
A. That is the identical model.
Q. 31. That you built?
A. Yes, sir.
Q. 32. For Mr. Byers in the fall of 1899?
A. Yes, sir.
The Court: Is that all? Is that all he knows?
125 Q. 33. How long did you work with Mr. Byers for the Burlington?
A. I worked from March in 1899 until June, 1900.
The Court: Cross-examine.
Mr. Phillips: Just a moment. I was out of the room. What does he say about the sketch? (Testimony read.)

Cross-examination by Mr. Phillips:

X.Q. 1. When did you see the model, Plaintiffs' Exhibit 10, last?
A. It was in 1899.
X.Q. 2. You have not seen it, until today, since then?
A. No, sir.
X.Q. 3. What?
A. No, sir.
X.Q. 4. How long have you known Mr. Byers?
A. Which Mr. Byers have you reference to?
X.Q. 5. J. J.?

A. I first got acquainted with him in 1899, the spring of 1899.
X.Q. 6. What time in 1899?
A. It was in March, I believe.
X.Q. 7. What?
A. March.
X.Q. 8. In March?
A. Yes, sir.
X.Q. 9. What did you say your business was?
A. Why, bridge, and building.
X.Q. 10. What?
A. Bridge and building.
X.Q. 11. Not a model maker?
A. I do not understand your question.
X.Q. 12. Not a model maker?
A. No, sir.

Redirect examination by Mr. Kerr:

Q. You were originally a carpenter by profession, were you not?
A. Yes, sir.

126 GEORGE A. JOHNSON, recalled by the Complainant, testified as follows:

By Mr. Haight:

Q. 1. You are the same George A. Johnson who testified in this case yesterday?
A. I am.
Q. 2. You said, I believe, yesterday, that you were in the employ of the American Car & Foundry Company in 1899 up until June, 1910. Will you tell us briefly what the business of the American Car & Foundry Company was and is, and the extent of that business?
A. The American Car & Foundry Company was and is employed in the construction of all classes of railroad equipment, both passenger and freight. They manufacture bar iron, castings, wheels, and other parts entering into the construction of railroad equipment. The American Car & Foundry Company is the largest car building company in the country.
Q. 3. And did you have an opportunity during your experience with the car company, and have you had since, to become acquainted with all of the various types of drafting riggings that are employed upon railroad cars?
A. I did.
Q. 4. Have you been here and heard the testimony of various witnesses for the defendant, in regard to devices of the prior art?
A. I have.
Q. 5. I will ask you first, generally, Mr. Johnson, if any of the devices illustrated by any of the patents introduced by the defendants in evidence here have ever been practically used upon railroad cars in the United States?
A. They have not.

Q. 6. What is the practice, in dealings between manufacturers and specialists in the railroad field, as to parts of the draft rigging that they furnish the car builders, or the railroad companies?

A. The specialty manufacturers supply the cheek castings and the vertical thimbles, where the tandem draft gear is referred to; where a friction draft gear is referred to, they furnish the friction de-
127 vice and draft lugs; where a device of the Byers type is referred to, the cheek castings and spreader castings are furnished.

Q. 7. What opportunity, if any, have you had to see the Byers gear in actual service upon railroad cars?

A. I have had a great deal of opportunity. In my travels about the country I make it a rule to examine all cars that I can get at.

Q. 8. How long have you been exercising that opportunity; over what period of years?

A. I have been studying draft gears and their applications since 1899.

Q. 9. But in reference to the Byers gear particularly?

A. Since 1910.

Q. 10. Will you tell us, Mr. Johnson, what the weights were of the various parts of a draft rigging—of the usual draft riggings employed in the railroad field, say in 1899 and 1900?

A. Referring to a tandem gear, with a light spring of 6¼ by 8, which is the lightest M. C. B. draft spring, I should say the coupler at that time weighed 250 pounds; the yoke, with rivets used to connect the thimble and filler, also the rivets connecting the yoke to the coupler, in all would weigh 150 pounds; the springs would weigh 70 pounds for the two; and the four followers, 100 pounds.

Q. 11. What general change, if any, has there been in the size and weight of railroad equipment from that time up to the present?

A. There has been a very material change. For instance, in the same type of gear the coupler will now weigh about 300 pounds; the yoke, with its vertical thimble and yoke rivets, also thimble rivets, will weigh nearly 200 pounds; the draft springs weigh 110 pounds; the followers, 124 pounds for the four.

Q. What has been the occasion for this change, of this increase in the weight of draft rigging parts during that period of time?

A. During that period of time the average capacity of freight cars has increased from 30 tons, which prevailed at that time, to 50 tons or more, which prevails at present. In addition to this, the average length of trains at that time was about 30 cars, and it is now 60 or more. This change in the length of trains made necessary
128 similar increase in the tractive power of locomotives and the weight of same.

Q. 13. While we are on this subject, will you give us the weights of the various parts of a draft rigging—the Byers draft rigging, as manufactured by the National Malleable Castings Company?

A. The cheek castings, if you want the cheek castings, weigh about 75 pounds each. This weight varies slightly with the different car constructions. The spacer casting weighs 15 pounds; that is, the material furnished by the foundry. The remainder of the

rigging would weigh as follows: coupler, 300 pounds; the yoke, 112 pounds; the springs, 110 pounds; the followers, 120 pounds, and the key, about 40 pounds.

Q. 14. In view of these weights, and in view of the increase in weights, and also in view of your knowledge as a practical man of this art, will you tell the Court in a general way what the advantages of the Byers construction of draft rigging are?

A. In view of the gradual development of draft riggings, incident to the increased service, all of the parts have become materially heavier, in fact, so heavy that the ordinary riveted type of draft gear, having a capacity of say, 60,000 pounds, will weigh, with the coupler, over 700 pounds, and must be handled as a unitary structure, if it becomes necessary to take it down or replace it, in order to put in a new spring or follower. In a gear of the Byers type, it is possible to very easily change a spring, if one breaks, or a follower, by merely removing the bottom cover plate, letting down the gear, from below, and re-inserting same, replacing carrier plate, without in any way disturbing the draw bar or its connection to the yoke. This means that the total weight to be handled in repairs would not be more than 250 pounds, as against over 700, on the tandem gear of the same capacity. The Byers gear is wonderfully efficient, when repairs on the road are concerned. For instance, if on a trip between stations or repair yards a spring should be broken, or a follower, they can be very easily repaired by the train crew, and with the tools ordinarily carried in the caboose. This obviates
129 the necessity of cutting out the car, or hauling it in by chains, which is dangerous, and very unsatisfactory. If a riveted structure, a riveted draft gear of the same capacity breaks, it is very serious; and in fact so serious that I doubt very much if any train crew would even attempt to make repairs of the nature that would be easy with the Byers gear. This would necessitate their cutting out the car, or chaining it to the rest of the *chain*, hauling it in, and possibly transferring the load to another car.

Q. 15. Is there any advantage, Mr. Johnson, in the use of the transverse coupler key, connecting the yoke to the coupler, in the Byers structure?

A. The transverse key connecting the yoke to the draw bar permits the easy replacement of the coupler in case of breakage of same. It also greatly facilitates repair or replacement of yoke, if the yoke broke.

Q. 16. Just a moment ago, Mr. Johnson, in the next to the last answer you gave you said something about some of the parts being riveted. I didn't understand what you meant by that?

A. What I meant by that is the yoke riveted to the coupler and the vertical thimble riveted to the yoke in a tandem type of gear.

Q. 17. You also said that the draft gear could be easily removed in the Byers structure. What did you mean by the draft gear?

A. The cushioning medium, including the followers and springs.

Q. 18. Is there any advantage in the Byers gear in cases where there is no key connection between the draw bar and coupler, where you have a riveted yoke, for instance?

A. There is. The same thing would apply to this rigging with reference to the easy removal of springs and followers regardless of the type of connection of yoke to the draw bar.

Q. 19. And even where you have a key connection between the yoke and draw bar, is there any advantage in being able to remove readily the springs and followers from within the yoke pocket?

A. There is a decided advantage.

130 Q. 20. Why?

A. In case of breakage of springs or followers, the bottom plate can be removed and the failed spring or follower replaced without any difficulty.

Q. 21. In such a case, Mr. Johnson, speaking of the key connection between the yoke and draw bar, does it ever happen that it is difficult to remove the key so that even in a rigging not employing a rivet connection between a draw bar and yoke you have a tremendous advantage in removing the springs and followers from below, independently of the draw bar?

A. There is. I have noticed it frequently in yards that cars, wherein the key connecting the side links to a coupler, were bent so badly that they could not be driven out, and it was necessary for the repair men to saw them off. And there are times even if the key is not bent; in fact, very frequently they are worn to such an extent that makes it difficult to remove them. In a case like this it would not in any way affect the Byers rigging when it comes to replacing the springs or followers, or repairing them.

Q. 22. I notice, Mr. Johnson, that in the two models immediately behind you, the full size models, one being Plaintiffs' Exhibit No. 5, and the other being Plaintiffs' Exhibit No. 9, that the yoke is carried in channels in the cheek castings. Is there any advantage in that construction, and if so, state what it is?

A. There is a decided advantage in this construction. One advantage is that the weight of the yoke is spread over——

Q. 23. Just point out to the Court, if you will, what you are talking about, as you proceed?

A. The weight of the yoke is supported throughout nearly its entire length in the channel in each side casting. This distributes and minimizes the amount of wear. Further, when the yoke is in place and it is desired to apply the key, the yoke being in this channel is always in place, and the holes are registered, making it very easy to insert the key. In addition to this, the channel holds the yoke in a horizontal, central position. It transfers the pulling strains directly to the center of the following plate all the time, and

131 there is no chance for the yoke to sag down and throw an eccentric load on the spring rigging. Further, considering the buffing strains, the yoke, being supported throughout its length, and the key passing through, insures the coupler always being central with the front follower.

Q. 24. What advantage is that with reference to the coupler and springs?

A. It is a decided advantage, as it insures their acting in harmony.

Q. 25. Do you find that same structure and that same advantage in the device exhibited in Plaintiff's model, Exhibit No. 9?

A. I do.

Q. 26. And while you are there, Mr. Johnson, will you discuss Exhibit No. 9 in connection with Exhibit No. 5 of the plaintiff, and tell what differences, if any, there are between the two?

A. The advantages of the draft gear illustrated in figures or Exhibits 9 and 5 with reference to the removability and repair of the followers and springs, and the other parts—by this I mean the yoke and coupler—are the same. In both exhibits it is easy to remove from below the yoke the followers and springs, without in any manner disturbing the draw bar, or its connection thereto with the yoke. In Exhibit 5, instead of there being a single pocket, the pocket is made in two. However, all the working parts and all the functions in both exhibits—all the functions performed by the gear in both exhibits are identical. The channel for the yoke appears in both; the abutting shoulders for the followers appear in both; the removability of the springs and followers from below appear in both; the connections of the yoke to the draw bar are the same. They are both identical with reference to the channel for the yoke, and, in fact, I can see no difference in the actual working conditions of the two exhibits.

Q. 27. Will you tell the Court something about the blows that draft riggings have to stand in service?

A. Blows as high as 700,000 pounds are frequently recorded, and occasionally blows as high as a million pounds have been recorded in dynamometer cars.

Q. 28. And what is the fact, Mr. Johnson, as to the
132 enormity of those blows under present service conditions as compared with the conditions of ten years ago, say?

A. They are tremendously increased.

Q. 29. Why?

A. The motive power is much heavier; the cars are heavier; the trains are longer; the switching service is harder.

Q. 30. Do you know of single pocket casting in service, Mr. Johnson.

A. I do.

Q. 31. Just tell us where some are in service today in draft rigging?

A. They are in service on the Baltimore & Ohio Railroad, the Boston & Maine, the New York Central, the Southern Railway, the Soo Line, and many others.

Q. 32. How do you know that?

A. Well, the five I have mentioned I made designs for single pocket castings, and I had them manufactured and shipped to the railroads mentioned.

Q. 33. That is while you were in the employ of W. H. Miner.

A. While I have been in the employ of W. H. Miner.

Q. 34. Are those in service on those railroads today?

A. They are.

Q. 35. About how many that you know of right now?

A. Well, there are at least 500 in service on the five roads men-

tioned; and 2,000 or 3,000 have been manufactured since I have been with Mr. Miner.

Q. 36. During the course of this proceeding, Mr. Johnson, the term "M.C.B." has been frequently used. Will you tell the Court what that means?

A. "M.C.B." denotes the fact that the article referred to has been adopted as the practice by the Master Car Builders Association.

Q. 37. And when we say an M.C.B. coupler, we mean what sort of a coupler?

A. A coupler having the contour lines, the length, and the size of the rear end, or butt, as prescribed by the Master Car Builders Association.

Q. 38. Well, the Master Car Builders Association comprises whom?

A. Practically all the master car builders in the United States and Canada; also most of the operating officials.

133 Q. 39. And they agree on these standards to permit interchangeability of equipment, do they not, upon the roads?

A. They do.

Q. 40. And there is a master car builder on each railroad who belongs to this association so as to effect that result, is that the idea?

A. There are, but his title is not always Master Car Builder.

Q. 41. No. I call your attention to the patent to W. V. Perry, No. 228,385, that has been introduced in evidence by the defendant, and I ask you, as a practical man, what you have to say about the structure illustrated in the drawings of said patent?

A. The Perry patent, drawing patent No. 228,385, illustrates an obsolete type of draft gear of the tail bolt variety. In this drawing the followers and springs are threaded on the tail bolt portion of the draw bar and the key, small g, is supposed to retain same in place. However, there is nothing shown in the drawing to indicate how this key is inserted or withdrawn as the hole in the draw bar is less in width than the two ends. The equivalent- for the side castings are not shown as being secured in any way to the structure, and the follower, carrier plates are apparently nailed to these—to the equivalent of the side casting. The entire device is inoperative and obsolete. I can conceive of no railroad utilizing such a device. The followers and springs cannot be removed without withdrawing entirely the draw bar with its integral tail pin.

Q. 42. Has that device been used in railroad cars?

A. It has not.

Q. 43. I call your attention to the structure illustrated in the patent drawings in the Reagan Patent, No. 491,785, introduced by the defendant, and ask you to tell us briefly, as a practical man, something about that structure?

A. The Reagan Patent, No. 491,785, the drawings indicate a vertical yoke type of gear; vertical tvpe of yoke secured to coupler by means of vertical key, large E. This gear, or rather the springs and followers, *are* not removable from below as in the Byers struc-

134 ture, for the reason that the structure includes a vertical yoke. The key E, which is vertical, and has the head below and the spring cotter above, could probably not be removed without great

difficulty after the cars had been in service for any length of time. Further, I do not see how it would be possible to insert the spring cotter X in the key or withdraw same and spread the ends if the draft gear was up in the car. The space between the draw bar and the sills, as shown on the plan, would certainly not give a man sufficient room to do this; and further, the only possible inspection of this spring cotter would be by feeling up between the sills. You could not see it as the floor of the car would absolutely prevent this. The large plate C serves no function except possibly as a sill spacer. The integral flanges, small "t," on the cheek plates would prevent the springs and followers from being removed from below, even if it was possible to get the yoke off.

Q. 44. What have you to say about the safety of a device in which the cotter X is used to support the key E?

A. I would say that this was extremely dangerous, and I do not believe any railroad would permit its use. There is a great deal of weight on the cotter X, and it would shear off very easily.

Q. 45. Has that device been used?

A. It has not.

Q. 46. I next call your attention to the Frost Patent, No. 510854, and with it the Frost Patent, No. 532272, and I will ask you to briefly discuss this from a practical point of view?

A. These two Frost patents show an absolutely inoperative device. The bolts or rods 24, shown in the drawing, or rather a portion of them,—there is nothing to indicate where they stop or where they begin would perform no function. They are entirely too weak. Further, the spring in the rear end of the yoke would not remain in place if applied as shown on patent 532,272; and if applied as shown on patent 510,854, could not be removed without compressing the spring, and that is extremely difficult, if not impossible. I might say here I have frequently tried to remove springs from
135 similar bosses, and it is almost impossible without special tools. The followers are threaded on the yoke and could not be removed without taking the whole business down, and then it would be difficult. The vertical rod, 24, would interfere with any rearward movement of the equivalent of the draw bar; in fact, the entire device is impracticable and has never been used.

Q. 47. As far as the draft rigging is concerned, the other Frost patent referred to, shows substantially the same structure, does it not?

A. It does, sir.

Q. 48. We won't spend any further time on that. I next call your attention to the patent to W. H. Miner, No. 570,038.

A. This patent to W. H. Miner shows a tandem type of draft rigging, wherein the yoke is made in two pieces bolted together. This device has never been used, and it is not—it would not be easy or a simple matter to remove the followers and springs from the rigging. To do this it would be necessary to take the nuts off ten bolts, and my observation of bolts around draft rigging show- —proves conclusively that if a device of this character has been in service a short time the bolts would be bent up and the threads spoiled to such an extent that

it would be practically impossible to do this. As shown, I would not say that the followers and springs are readily removable from below.

Q. 49. Are they removable at all without disconnecting the yoke from the draw bar?

A. They are not.

Q. 50. In order to remove them what would be necessary?

A. In order to remove them—I didn't get that?

Q. 51. In order to remove the springs and followers what would be necessary?

A. It would be necessary to disconnect the yoke from the coupler.

Q. 52. I next call your attention to the patent to J. A. Pilcher, No. 616,965, and ask you to very briefly discuss that from a practical point of view?

A. The Pilcher structures as illustrated by their drawings are of the tail bolt variety, with the exception of Figures 9, 10 and
136 11, wherein a yoke of the vertical type is used riveted to the draw bar. It would not be possible to remove these springs or the followers from the car without disturbing the draw bar; in fact, in order to get the followers off it would be necessary to cut out the rivets connecting the coupler to the yoke. On the other structures is shown a tail bolt, the front end of which is riveted or bolted to the draw bar, making it impossible to remove these springs and followers without disconnecting same—without in figures 1 and 2 removing the nuts and threading the followers off, which applies also to figure 4; and in figure 6 it would be necessary to also thread them off as the bolts pass through apertures in the followers. On figures 9 and 11 the rivets would have to be cut off in order to get the followers and springs out.

Q. 53. That is enough on that. Now, turn to the Simons Patent, No. 627,540?

A. The Simons Patent shows a vertical type of gear with the followers and springs extending through the sills. This type of gear has never been used and is impractical as in order to remove the followers and springs from within the slots in the sills without, in my opinion, removing the trucks, as the wheels, which are directly outside, or within a foot or so outside, would prevent sliding them out. In addition to this, their structure necessitates cutting out the sills so much that they would be very weak. Further I do not know of any construction in the country where the center of draft, with relation to the bottom of the center sill, is so high. The structure is not in accordance with accepted car construction. I have never seen it used. I do not believe it ever has been used, and I do not think it ever will be used.

Q. 54. In connectiion with that particular structure, as illustrated in the patent drawings of Simons Patent, will you tell me something about the parts immediately surrounding the draft rigging, the parts on either side? Tell us the distance between the end sill and bolster, and give us a general description, as briefly as you can, of the parts immediately adjacent to the draft rigging proper, and refer
137 to the models, if you wish, in order to make yourself clear?

A. There are a number of reasons why it would be difficult

to remove this gear from the side. One reason is that the train line—that is, the air line, must be located, or rather the end of it, thirteen inches from the center of the draw bar laterally, but on the same plane horizontally. This, unless special provision was made in the train line, which would cause a pocket, would interfere on one side with the cushioning medium being withdrawn. Another feature in steel car construction is the diagonal bracing which extends from the junction of the Bolster and center sill to the junction of the side sill and end sill. It is diagonal, and passes very close to the space which would be needed if this type of gear was utilized. I have already stated that with a gear of a capacity such as we are using today, and with M. C. B. spacing of sills, it would be impossible to remove this gear sideways by reason of interference with the wheels, unless the trucks were taken off. In some cars there are intermediate sills. These are longitudinal sills extending longitudinally of the car between the center and side sills. If these intermediate sills are used, they would prevent the removal of this gear.

Q. 55. You spoke of M. C. B. spacing?

A. Yes, sir.

Q. 56. What is that?

A. 12⅞ inches.

Q. 57. That is, 12⅞ inches between the sills——

A. Between the two sills.

Q. 58. Between this sill and this sill, referring to the two sills on Plaintiffs' model 5?

The Court: Yes.

Q. 59. Now, the air line that you spoke of is a pipe, is it not?

A. The air line is a pipe.

Q. 60. About where is that located?

A. It extends along the horizontal center of the coupler and thirteen inches out to the right hand side of it. That is where the angle cock must be located.

Q. 61. What is there connected with the ends of these center sills in the car?

A. The end sills.

138 Q. 62. Where is that located?

A. It is located transversely of the car and attached to the center sills, side sills and intermediate sills, if there are any.

Q. 63. And the side sills are the longitudinal sills at either side of the car frame, are they not?

A. They are.

Q. 64. And the intermediate sills——

A. They are the sills between the side sills and the center sills.

Q. 65. Running longitudinally of the car?

A. That is what I said.

Q. 66. What transverse member, if any, is there? I mean transverse in reference to the center sills inwardly from the end of the car?

A. There is a diagonal brace extending from either the end sill

at the outside corner to the bolster and center sill, or else from the end and center sills to the outside of the bolster.

Q. 67. And about what is the distance between the inner faces of the wheels on the truck and the immediately adjacent center sills?

A. About 18 inches from here to the wheel (indicating).

Q. 68. You spoke of a body bolster?

A. Yes, sir.

Q. 69. How far from the end of the car is that body bolster located in usual constructions?

A. It is usually five feet from the center of the body bolster to the face of the end sill or striking plate.

Q. 70. So that the distance between the outward face, or outer face of the body bolster and the inner face of the end sill is considerably less than five feet?

A. It is.

Q. 71. In usual construction?

A. It is.

Q. 72. Will you now turn to the Hinson Patent, No. 635,322, and tell us first, whether that is a draft gear or not, and discuss it very briefly from a practical point of view?

A. The drawings show that this is not a draft gear. It is merely a cushion for the coupler horn to strike against.

Q. 73. That is, it resists compression in one direction only, is that right?

A. It resists compression in one direction only.

139 By Mr. Phillips:

X.Q. 1. Referring to the Chicago suit, between this defendant and Mr. Miner, did you testify as a witness in that suit?

A. I did.

X.Q. 2. And you were sent here by Mr. Miner to testify as a witness in this suit?

A. No sir, I was not.

X.Q. 3. How did you happen to come?

A. Mr. Haight asked me if I would come to Portland and appear as a witness in this case.

X.Q. 4. And Mr. Haight was counsel for Mr. Miner in the Chicago suit?

A. He was.

X.Q. 5. And he also appears as counsel in this suit?

A. Mr. Haight is present and appears in this suit.

X.Q. 6. How many types of draft gear are there in service to-day?

A. There are the twin spring type, the tandem spring type, and the friction gear type.

X.Q. 7. Isn't it true that there are twenty or thirty different types in actual service?

A. There may be twenty or thirty different manufacturers, but I do not think there are that many.

X.Q. 8. Well, they are making either different types, or variations of the same type; is that what you mean—twenty or thirty manufacturers?

A. I do not believe there are twenty, even at that.

X.Q. 9. How many do you think there are?

A. Roughly, not more than ten.

X.Q. 10. To give the Court some idea of the extent of this draft gear business, can you give any idea how many cars there are in the United States to-day using draft gear? Freight cars, I mean?

A. I do not know exactly, and possibly not approximately, but there must be more than two million.

X.Q. 11. How many different types of draft gear are sold by Mr. Miner?

A. Mr. Miner sells the friction gear type, and the twin spring gear type, and the tandem spring gear type.

X.Q. 12. Will you please give a general idea, as briefly as you can, of the difference between these several types?

A. The twin spring gear is a gear in which the two springs are set one above the other, or side by side. The tandem gear
140 is a spring gear wherein the springs are set one behind the other. In the friction gear type the friction device itself, with all contained parts, are located in the pocket provided for the same in the center construction.

X.Q. 13. Does the patent to Miner, 570,038, which you discussed in your direct testimony, disclose a tandem spring gear?

(Paper handed to witness.)

A. It does, sir.

X.Q. 14. Is the William H. Miner, the patentee named in said patent, the Mr. Miner by whom you are employed?

A. I believe he is the same. The name is the same; and I recognize the patent attorneys appearing on here (indicating).

X.Q. 15. When you refer to the "Byers type of draft gear", do you refer to a type of draft gear which has an integral pocket casting or box such as is shown and described in the Byers patent in suit, or, to that type—no. That is the end of the question. Read the question, please? (Question read.)

Mr. Phillips: Cross out after "such as is shown and described in the Byers patent in suit".

A. In referring to the Byers draft rigging I refer to the twin spring type of gear, one spring set above the other, utilizing a horizontal yoke, and so arranged that the followers and springs may be removed readily from below, without disturbing the draw bar or its connection with the yoke.

Mr. Phillips: May it please the Court, I ask the witness' answer be stricken out, as entirely irresponsive to the interrogatory, and volunteered.

Mr. Haight: I object; that is entirely responsive.

141 The Court: Read the question and answer.

(Question and answer read.)

Mr. Phillips: That is entirely irresponsive to my interrogatory. I asked him if he referred to that type of draft gear which had an

integral pocket casting or box, and he has not given me any answer at all. He has simply volunteered a statement.

The Court: I think you may as well strike it out, and let him start again. The question may be answered by yes or no.

Mr. Phillips: Now, will you please answer yes or no?

Mr. Haight: I do not see why the witness should be asked to answer yes or no. He very likely cannot answer it by yes or no.

The Court: I do not know that he should answer it by yes or no; but ask the question again, and, if possible, answer it by yes or no.

Mr. Phillips: I will ask the stenographer to read the question to him.

The Court: Yes, or give it to him again if you want it in another form.

X.Q. 16. When you refer to the Byers type of draft gear, do you refer to a type of draft gear which has the integral pocket casting shown and described in the Byers Patent in suit?

A. I do; and also any modification of the drawings shown in the patent, regardless of whether the pocket is made in a single casting or two castings, or a hundred castings,—if that could be done.

X.Q. 17. Did you ever see, in practical use on a car, a draft gear having an integral pocket casting or box like that shown and described in the Byers Patent,—on a freight car?

A. Do I have to answer yes or no to that?

The Court: Try to do that, and it will make your record better, saying yes or no. It is always better for a witness to answer
142 yes or no. Many witnesses have a habit of trying not to say yes or no. I do not say that you have.

A. Yes sir. I have seen a single pocket casting on cars, but they were not the identical structure shown by Mr. Byers in his patent.

X.Q. 18. Did you ever see, in practical use on a freight car, a draft gear having a pocket,—an integral pocket casting, like that shown and described in the Byers Patent.

Mr. Haight: If the Court please, that question is entirely too broad. He may mean the claims of the Byers patent.

Mr. Phillips: My question was limited to "shown and described".

Mr. Haight: Yes.

Mr. Phillips: I am referring to the illustration in the drawings, and the description in the specifications.

The Court: In the specifications of the patent? In the specifications of the Byers patent?

Mr. Phillips: Of the Byers Patent.

Mr. Haight: I do not see how the witness could be supposed to presume what "like" means. Does he mean "identical"? Does he mean performing the same function? What does the question mean, in the use of the term "like"?

The Court: He may answer, and if he finds any difficulty about it, he may say so.

Mr. Haight: Note my objection.

The Court: Read the question.

(Last question read.)

A. I have, on tenders, which are cars designed to carry water and coal for the engine.

X.Q. 18. You have referred to certain pocket castings which you say you designed yourself when you were in the employ
143 of William H. Miner. Are those the castings which you mean you saw on tenders?

A. Yes, sir.

X.Q. 19. They were designed by you?

A. Designed under my direction.

X.Q. 20. Were they in all respects like the castings shown and described in the Byers Patent?

A. They were integral pocket castings.

X.Q. 21. Will you please answer my question? Were they in all respects like the pocket castings or boxes shown in the Byers Patent?

A. Why, no, sir; not in all respects.

X.Q. 22. Were those pocket castings like the pocket castings shown and described in the patent in suit, having horizontal lugs running across the top and bottom, against which the ends of the followers have their bearing, across their full width?

A. I would like to understand that question.

Mr. Phillips: Will you please read it to the witness, Mr. Stenographer. (Question read.)

A. No, they did not extend all the way across, but they extended across the pocket.

X.Q. 23. Then in that respect they were not like the Byers design of pocket casting?

A. In that respect they performed the same identical function.

Mr. Phillips: I would like to have the answer stricken out as irresponsive.

The Court: Yes, strike it out.

Mr. Phillips: Now, will you please answer my question?

A. Read that.

(Question read.)

A. They were not, exactly.

X.Q. 24. I call your attention to Plaintiffs' Exhibit 9, to the end marked "2". Will you please state whether or not you ever
144 saw, in practical use on a freight car, a pocket casting or box like the pocket casting or box forming part of this model? (Indicating on model.)

A. I did not, no sir.

X.Q. 25. I call your attention to the other end of the same model, marked "1". Did you ever see, in practical use on a freight car, a box casting like the pocket casting which forms a part of this model? (Indicating on other end of model.)

A. If "like" means "identical," I did not.

Mr. Haight: Yes; now you are getting at it.

The Witness: And that applies to my answer to the first question, sir.

X.Q. 26. What is the spacing of the sills on engine tenders, on which you say you have seen pocket castings used?

A. Usually 18 to 20 inches.

X.Q. 27. Isn't it true that the housing or pocket casting was used on these tenders for strength in filling up the space between the sills in order to reduce the width so as to have a bearing for the followers similar in width to that on freight cars?

A. Not entirely.

X.Q. 28. It is true that it does have that function?

A. That is one function, yes, sir.

X.Q. 29. And that is the principal function?

A. No, sir.

X.Q. 30. Why isn't it?

A. In the general design of engine tenders there are four longitudinal sills; the center sills are spaced quite far apart, in accordance with usual practice; and this integral single pocket casting is designed to permit of a standard draft gear being used; and it also, of course, has a considerable bearing on reinforcing the under-frame, and keeping the same square.

X.Q. 31. But it is true, is it not, that when the engine tenders have their center sills the standard distance apart—that is, 12⅞ inches, these housings or pocket castings are not used, but they are invariably provided with independent cheek plates?

145 A. That is true, but tenders are seldom designed to have a 12⅞ spacing of sills.

Mr. Phillips: What is the answer please?

(Answer read.)

X.Q. 32. What kind of draft gear is most extensively sold by Mr. Miner?

A. Friction gear.

X.Q. 33. Just what do you mean by that?

A. I mean a friction device which consists of a cylinder or friction casing, which contains springs and frictional elements, which, of course, greatly increase the capacity of the springs used.

X.Q. 34. Are vertical yoke twin spring draft gears in commercial use to-day?

A. Very few.

X.Q. 35. Isn't it true that Mr. Miner is putting on the market a vertical yoke twin spring draft gear—or vertical yoke draft gear, in which the yokes are attached to the sides of the coupler?

A. Vertical twin spring gear with the——

X.Q. 36. A vertical? I did not say "twin spring."

A. Oh, pardon me.

X.Q. 37. I cut that out.

A. I would like the question read, then.

(Question read as amended.)

A. Why, no, sir, it is not.

X.Q. 38. How is the vertical yoke draft gear sold by Mr. Miner attached to the coupler?

A. The vertical yoke type of gear is ordinarily riveted to the top and bottom of the coupler.

X.Q. 39. How many of those were made by Mr. Miner last year or sold?

A. I do not know, sir.

X.Q. 40. Can you give an estimate?

A. Oh, I will say roughly, twenty thousand. I do not know exactly.

X.Q. 41. You have stated on account of modern conditions, and increased weight of cars, that increased weight of parts of draft rigging was required. Was this to secure greater strength?

A. Yes, sir, greater strength.

146 X.Q. 42. Referring now to the draft gear disclosed in the Frost patent, No. 510,854, would such a gear as is illustrated in figures 1 and 2 of that patent be an operative device under light draft and buffing strains?

A. It would not.

X.Q. 43. Why not?

A. Because the bolts 24 are not sufficiently strong to even compress the spring halfway.

X.Q. 44. You mean because the—what did you call that?

A. Bolts 24.

X.Q. 45. 24 are not strong enough. It is true, however, is it not, that in the device of the Frost patent there are provided two followers, a spring interposed between the two followers, and stops for limiting the motion of the followers, so that if the draw bar is forced backward, the device is put,—the spring is put under compression, or, if it is pulled forward, the draw bar is pulled forward, the spring is put under compression?

A. The front bolts 24 do not even bear against this follower, and the follower is cut away so much that it would not be of any use at all in service. That is one of the reasons why I say it is inoperative.

X.Q. 46. But you do not deny, do you—we are not talking about strains that are being put on the structure—you do not deny, do you, that when the draw bar is forced back, in the Frost device, the springs will be put under compression; and when it is pulled ahead, the springs will be put under compression?

A. That is true of that model.

X.Q. 47. That is true of the device shown in the patent?

A. The front follower would move forward—the front follower would not be resisted by the rod in its first travel forward.

X.Q. 48. Why not?

A. Why, it does not bear against it.

X.Q. 49. It does not bear against it?

A. No, sir. Maybe I have—

X.Q. 50. Do you wish to tell the Court—

Mr. Phillips: I want you to see this, your Honor. Here is 147 the point that he is testifying to. (Indicating to Court.)

The Court: This is the Frost, 1895, patent?

The Witness: 1893, sir.

Mr. Phillips: The witness has stated that this device is not operative because this front follower, that follower (indicating)—

that front follower does not bear against those rods. Now, it seems impossible that a man can make such a statement.

The Witness: Nevertheless, it is a fact, Mr. Phillips, although there are other reasons why it does not.

X.Q. 51. When you make the statement, that the front follower does not bear against the bolt 24, you are basing that statement on the minute clearance, if there is any, shown in the drawing; is that correct?

A. 24 are bolts, and if the front follower is a 2 inch follower, that distance would be pretty near a half an inch.

X.Q. 52. Will you answer my question, please?

A. I cannot answer it, sir, that way.

X.Q. 53. Why can you not tell whether—

A. You say "minute."

X.Q. 54. * * * whether in making your answer you depend upon that minute difference shown in the drawing?

A. I do not call it a minute difference.

X.Q. 55. As soon as you put a draft on there, wont that clearance disappear?

A. Why, surely.

Mr. Phillips: Yes.

X.Q. 56. You have referred to the fact that in the Byers Patent the springs and followers can be taken down as a unit, as if it were an advantage. Isn't it true that with the form of stop or spacer which is rigidly connected with the follower, as shown in the Byers Patent, that you have got to take out the springs and followers as a unit?

A. Why, yes, that is quite true.

X.Q. 57. Yes. So if one spring breaks, you have to take
148 out both?

A. Yes, sir.

X.Q. 58. And the followers?

The Court: And what?

Mr. Phillips: And the followers?

A. That is true. I think I said several times yesterday, taken out as a unit, those four things, the followers and the springs.

X.Q. 59. Will you please state how many cars are equipped by Mr. Miner in a year with draft gear; and, as well as you are able, the number of the draft gears of the several types that are used?

Mr. Haight: That is all right if he knows.

A. I am not competent to answer that question. I do not have access to all the books.

X.Q. 60. Isn't it true that Mr. Miner is applying to cars, having a single I-beam center sill, a draft gear requiring the web of the beam to be cut away, or apertured to a greater extent than would be required in the application of the draft gear of the Simons Patent?

A. Not to my knowledge, sir.

X.Q. 61. Do you know of anyone that is making such an application?

A. Some patents were issued a long time ago,—I believe to

Bettendorf, and one to O'Connor, on that construction, but I have never seen any used.

X.Q. 62. Haven't you ever seen any in practical use?

A. I have not, sir.

X.Q. 63. How would you apply a draft gear to a car having such a single center sill, and keep the draft gear in the center of the sill—in the center of the car?

A. I would make such a design over a very heavy protest; I do not think it is good.

X.Q. 64. That is a matter of your personal opinion?

A. Yes sir.

X.Q. 65. And isn't it true, as a matter of fact that the Simons Patent makes special provision for reinforcing the center sills along the portions which are apertured for the purpose
149 of the removal of the followers and springs?

A. Simonds shows a T riveted to the bottom of the I-beam. I do not know what good it would do him.

The Court: Your question refers to the Simons patent.

Mr. Phillips: Yes.

X.Q. 66. What does he say about it in his specification?

A. If you will tell me where it is I will be glad to read it.

X.Q. 67. Did you say you had not read the Simons specification?

A. That is true, sir.

(Mr. Samuels indicates to the witness.)

A. "17 17 are suitable reinforcements riveted to the under side of the 'I' beams 1 1 to compensate for the metal removed in slotting the webs of said 'I' beams, These reinforcements may extend to any desired length." Do you want any more, Mr. Phillips.

Mr. Phillips: That is all.

X.Q. 68. You have assumed to make a statement as to how many draft gears like those shown in the end of Plaintiffs' Exhibit 5—was this end marked?

Mr. Haight: No; this is the Miner and this is the Simons (indicating)—Exhibit 5.

Mr. Phillips: Read that question, please?

(Question read as follows: "Q. You have assumed to make a statement as to how many draft gears like those shown in the end of Plaintiffs' Exhibit 5 ").

Mr. Phillips:——the type marked—I did not understand that. Read the question again.

(Question read.)

Mr. Phillips: —which I mark 4 were made and sold by
150 Mr. Miner. Why can't you give me some estimate as to the entire number made and sold by him?

A. My observation of the castings running through the foundry, Mr. Phillips, led me to believe that 50,000 riggings would be approximately correct. I don't claim that is right. They have gone through in large quantities.

X Q. 69. I understood that one of your objections to the device shown in the Simons patent, No. 627,540, was based on the fact that the air pipe ran somewhere in the vicinity of the aperture

through which the followers and springs are to be removed. Is that correct? A. That is correct, sir.

X Q. 70. It runs on one side only?

A. One side, the right-hand side, as I explained in my answer.

X Q. 71. I presume it would not be possible to take it out the other side?

A. The train line would have a tendency to interfere with driving it out from the other side. It would have a tendency to interfere with driving the gear out.

X Q. 72. How big is that pipe, please?

A. Oh, it is two inches outside diameter.

X Q. 73. How big is the follower?

A. What is that?

X Q. 74. How wide is the follower?

A. The followers for 6¼ springs would be 6½, and for an 8-inch it would be probably 8¼.

The Court: That is the width of the follower?

A. Yes, sir, the width of the follower.

Mr. Phillips: The witness has stated that this air pipe comes up along on one side of the center sill so as to interfere with taking the followers and springs out of the draft gear sideways.

The Court: Yes.

151 Mr. Phillips: So I asked him why he could not take them out the other side. This is only on one side.

The Witness: Mr. Phillips, you must not forget the confined space. You are under a car, in between the wheels, and the man driving the gear with a sledge would be liable to damage that pipe. There is no question about it.

Mr. Phillips: I also have in mind the exigences of this case.

Mr. Haight: We have noticed that.

Mr. Phillips: I do not like to be slow in cross-examination, but these are intricate matters, and this is a new art for me.

X.Q. 75. Have you got any illustration or model that shows what you call pockets to be used on engine tenders?

A. I have, sir.

X.Q. 76. Where is it?

A. In my grip down there if you will permit me to get it.

X.Q. 77. I would like to see it

A. Not the models, the illustrations. I hand you W. H. Miner drawing No. 5445-A illustrating a single pocket casting in connection with a friction gear, applied to B. & O. locomotive tenders. (Handing drawing to Mr. Phillips.) Another drawing, 3843-B, this is also another W. H. Miner drawing, showing a single pocket casting applied to Boston & Maine locomotive tenders. The next drawing, a W. H. Miner drawing, 4104-C, showing a single pocket casting applied to Southern Railway engine tenders. Drawing 3772-E of W. H. Miner, showing a single pocket casting——

Mr. Phillips: I simply asked for one illustration, may it please your Honor.

The Witness: Applied to New York Central tenders.

Mr. Haight: He asked for them; we have a dozen or more.

152 Mr. Phillips: I don't care for all of them; if they wish to put them in, put them in.

The Court: That is all you asked for, one?

Mr. Phillips: I asked for one.

The Witness: I thought you said "any illustrations."

Mr. Phillips: I said "any illustration."

The Witness: I misunderstood you. Pardon me.

Mr. Phillips: Will your Honor allow me about five minutes to look at these?

Mr. Haight: I would like to have the record show that we have a great many here that are at Mr. Phillips' disposal, if he desires them.

The Court: That which you have just said is made a part of the record, Mr. Haight. The stenographer has taken down what you have said.

X.Q. 78. In answer to my last interrogatory you produced the following blue prints, to-wit: Blue Print Miner friction draft gear, drawing No. 3843; Miner friction draft gear 3772; Miner friction draft gear 4104; Miner friction draft gear 5445. Isn't it true that all the blue prints that you have produced show draft gears of the vertical yoke type?

The Court: Of what type?

Mr. Phillips: Vertical yoke type.

A. I believe it is. I would like to refer to the drawings. That is correct.

X.Q. 79. Now, how would you take out the springs and followers in the draft gear shown in these blue prints? I wish you would answer this question briefly, and as general as possible.

A. I would be very glad to, sir. These prints show a friction draft gear wherein the springs and the other parts are enclosed in what we call a friction cylinder or casing. Therefore, to take them down you take down the friction gear complete. You could not take the springs out of the car; it was not intended to do that.

153 You could not take the springs out while it is in the car. A friction gear is a heavy shock absorbing device.

The Court: What—absorbing?

The Witness: Shock absorbing. And it is self-contained. Inside that cylinder are springs and friction elements, wedges, etc., so it makes one complete device.

The Court: So you have to take it out of the car before you——

The Witness: Oh, yes.

Mr. Phillips: You have to take it out of the car before you can take the springs and followers out?

The Witness: Yes.

X.Q. 80. You have to take it all out of the car?

A. Yes, sir.

X.Q. 81. Before you can take the springs and followers out?

A. Yes, sir.

The Court: Is that all?

Mr. Phillips: I desire to offer these drawings in evidence.

The Court: They are offered?

Mr. Phillips: They are offered.

The Court: Well, we will assume they are offered anyway. And marked?

Mr. Phillips: Where does our lettering leave off?

The Court: Marked respectively. You are at 14, are you not?

Mr. Phillips: Mark them right in order, Defendant's Exhibits, commencing with the last.

Redirect by Mr. Haight:

Re-D. Q. 1. You have already stated, Mr. Johnson, that W. H. Miner did not manufacture the structure shown in Miner patent 570,038 offered in evidence by the defendant. Can you show
154 us very briefly what tandem gear W. H. Minor does sell?

A. That gear is illustrated by a full sized model here.

Re-D. Q. 2. You are referring to exhibit No. 15 of the Plaintiff?

Mr. Neave: It will be when we offer it in evidence.

Re-Dd. Q. 3. What is the difference very briefly, between the structure illustrated in this model and the structure shown in the patent referred to? Just show the Court on the structure?

(Witness illustrates to Court on structure, Plaintiffs' 15.)

A. The model referred to has a yoke of the ordinary type riveted to the draw bar vertically, and riveted to the vertical thimble—or rather, the vertical thimble to it. In the patent drawing referred to the yoke is made of a strap, top and bottom of the structure, which connect together by means of these four vertical bolts, which pass through the coupler and through the vertical thimble, and through the rear filler.

Re-D. Q. 4. What have you to say as to the rear end yoke, as compared with the structure shown in the patent?

A. The rear end of the yoke is integral with the rest of the yoke. It is all one piece and infinitely stronger than the structure shown in the patent. In fact, the structure shown in the patent would not stand up under service.

Re-D. Q. 5. In the model of the structure, is any provision made for removing any part of the yoke separately?

A. There is not.

Mr. Haight: I offer that in evidence as Plaintiffs' Exhibit No. 15, if the Court please, being model of the tandem draft gear sold by W. H. Miner.

The Court: Is it under the Miner patent of 1896?

The Witness: No, sir.

155 The Court: It is a modification of that patent, is it?

The Witness: It is a different yoke.

The Court: Oh, yes; you have explained that.

Re-D. Q. 5. I notice that the blue prints that have just been offered in evidence by the defendant, bear the name of W. H. Miner. Does W. H. Miner sell any draft rigging that is not sold as W. H. Miner's

draft rigging, regardless of by whom it is manufactured, or under what patents it may be manufactured?

A. He does not, sir.

Re-D. Q. 6. Mr. Phillips, in cross-examining you, asked you a number of questions in which he used the term "like" in comparing structures. In making your answers, how did you interpret the term "like" as meaning identical in mechanical structure, or how?

A. "Like" does not mean, in my opinion, "identical."

The Court: What does it mean, generally referred to in patents—substantially alike?

A. Yes, sir, I would say that.

Mr. Phillips: I think, your Honor, that point is cleared up by the introduction of these blue prints, which show what the witness said was the Byers casting.

The Court: Yes, I think so. He said "substantially alike" before.

Mr. Haight: Referring to the Frost patent No. 510,854, and adopting the theory of the defendant's expert, Mr. Decker, that the members 24 are clips, what would you have to say as to whether the structure illustrated in the said patent drawings could be employed in buffing at all, or not?

A. If the front bolts 24 are really a "U" bolt, or clip, the bottom of said clip, which extends across, would interfere with the
156 rear portion of the draw bar in buff (indicating).

Re-D.Q. 7. Indicating the shoulder?

A. Indicating the shoulder near the numeral "16."

Re-D.Q. 8. In what figure of the drawing?

A. In figure 6 of the drawing.

Recross by Mr. Phillips:

Re-X Q. 1. What kind of a view is figure 2 in the Frost patent?

A. Figure 2 in the Frost Patent, No. 510845, is a side elevation.

Re-X Q. 2. On what ground do you say the shoulder of the draw bar was like the yoke 24, if it is a side elevation?

A. If we adopt the theory, as Mr. Haight asked me, that the "24" indicates a loop or clip, the cross member there would interfere with the shoulder on rearward movement.

Re-X Q. 3. To fulfill at its functions as a stop, is it necessary that this front yoke should support the draw bar and coupling? Is it not common to support it in front by some other support, so there could be plenty of room for that shoulder to go through between the arms of the yoke above the bottom, if there is a bottom?

A. I do not understand that, sir.

Re-X Q. 4. Is it not a common thing in construction, or a universal practice, to support this gear out towards the point 10 shown in the Frost patent; give it additional support—support the draw bar?

A. There is nothing at all in the drawing at all to indicate it.

Re-X Q. 5. I did not say there was; but is it not a common practice in the art?

A. We certainly do support it, yes.

Re-X Q. 6. Now, would you say that any mechanic that had, we

will say, ordinary common sense, to say nothing of mechanical skill, would take this structure to build, that would not know enough, if the shoulder did strike the yoke, to move it back further?

A. They could not move it.

Re-X Q. 7. Why not?

A. According to the drawing. I am referring to the drawing.

157 Re-X Q. 8. Oh, yes; you hold it right down. You consider the patent, as a working drawing——

A. Mr. Phillips, I am only testifying from what I read from this drawing. I am not a patent expert.

Re-X Q. 9. No, I don't think you are.

A. Thank you; we agree on that.

Mr. Haight: Do I understand, Mr. Phillips, that you offer that to prove that Mr. Decker, who suggested that theory, is not a practical man, and devoid of common sense?

Mr. Phillips: What is that?

Mr. Haight: That was your question. Anybody who would suggest using a clip that would stop the shoulder would not be a man of common sense.

Mr. Phillips: I said that any mechanic who saw it would naturally move it out of the way.

Mr. Haight: But when Mr. Decker put it there—I wanted to be sure that I understood the question of counsel.

Mr. Phillips: I think if counsel found the door shut, he would open it to get out.

Mr. Neave: Plaintiff offers in evidence a certified copy of the file wrapper and contents of the patent in suit, and it is marked Plaintiff's Exhibit No. 16—history of the patent in suit.

158 JOSEPH P. LIVERMORE, a witness on behalf of the Plaintiffs, resumed the stand and further testified as follows:

Direct examination by Mr. Neave:

Q. 1. Mr. Livermore, you have heard Mr. Decker testify about various patents offered in evidence on the part of the defendant?

By the Court: This is Mr. Livermore, recalled?

By Mr. Neave: Yes, Your Honor.

Q. 2. Will you please state which of those patents, to which Mr. Decker referred, were mentioned in the file wrapper and contents of the Byers patent in suit; and then will you please proceed to consider each of the patents mentioned by Mr. Decker?

By the Court: You can do that somewhat briefly, and get his idea.

By Mr. Neave: Yes, sir. He can do it briefly.

A. Of the patents referred to by Mr. Decker only one was cited in the Patent Office against the Byers application; that was the patent to Pilcher.

Now, I will take up the other patents. I will speak first of the patent to Hinson.

By the Court: That is the patent he cited?

A. That is the patent he cited, yes. I speak of that because it is not a draft gear at all.

By the Court: No, it is a buffer.

(By the Witness:) It simply shows a buffer plate, which has some resemblance, as shown in Figure 4, to one of the fol-
159 lowers in a draft rigging; but so far as I can see there is no other significance to that patent at all.

Now, I will refer to the Pilcher patent next, because that is the one that was cited by the Patent office.

By the Court: Pilcher—1899?

(By the Witness:) Yes. Before referring to the Pilcher patent especially specifically, I will state that all of these prior constructions are characterized by having the stop lugs vertical. They are up and down the sides of the cheek plates past the sills; and that involves that the followers stick out horizontally, the ends of the followers project at the sides of the springs and yoke—if one is used, whatever it is—to engage with those vertical stop shoulders. That is, the stop shoulders are vertical, and consequently the follower is horizontal, that its ends stick out and engage these verticals. That characterizes all——

By the Court: Anything more on the Pilcher?

(By the Witness:) There is just one thing more. That means either that the yoke—if one is used—must be vertical, or else it must be—if it is horizontal, it must be in some way interlocked with this follower plate, that is the follower plate must cross over in some way.

By the Court: Yes.

(By the Witness:) Now, referring to the Pilcher. I think all we need to refer to is Figures 8, 9 and 10, and they were cited as showing the horizontal yoke. 9, 10 and 11, I should say, Figures 9, 10 and 11.

Figure 9 is called a side elevation, and figure 11 a plan view. Now, that would indicate that the spring could be removed vertically from between the arms of the yoke. But Pilcher has the usual cheek plates with the usual vertical stocks—they show
160 in Figure 2—and consequently his follower, notwithstanding the yoke is horizontal, it sticks out horizontally, and that means it has to have holes through it. Figure 10 is a view of the yoke. And it has to have those holes 11 that the yoke passes right through.

By the Court: Yes.

(By the Witness:) Now, you will notice that it is rivetted to this—in Figures 9 and 11 it is rivetted to the drawbar 5.

By the Court: Yes.

(By the Witness:) And you see it is absolutely interlocked with these follower plates, and there is no possible way to get those apart without cutting the rivets off. It is an example of how not to do it, if you want to get the thing apart easily. I think that is enough for Pilcher.

By the Court: Now, go on with any other.

By the Witness: Perry——

By the Court: That is the first one?

(By the Witness:) That is the first one, yes. That is an old arrangement. Now, the thing to notice about that is that it is the tail pin or tail bolt construction, as distinguished from the yoke. That is, you have got to get a bearing at both the front and rear end of the spring. There is a shoulder on the draw bar that engages the front follower O at the left hand here in Figure 1; and the tail bolt A is a smaller continuation of the draw-bar, which is—passes right through the middle of the follower—and right through the hole in the follower—middle of the spring, and then right through the middle of the next follower. And then there has got to be a cross key and bolt of some kind to engage it with the rear side of the rear follower. That gives you your draw-bar bearing against the
161 rear side of the rear follower. But both the followers and the springs are sprung on the tail pin, and consequently there is no possible way to get them out, except by unfastening the tail pin and bring the whole draw bar and tail pin out with it. So there is no suggestion there that is referred to in this case.

By the Court: That is all you want to say about Perry?

A. Yes. Now, we will take the Frost patents together. In the first place, this construction that has been described, that is really the draft rigging construction, was not subject to either of these patents, they were relating really to the drawhead coupler construction.

By the Court: Strictly to the coupler?

A. Strictly to the coupler and drawhead part. And it looks to me as if they were merely some sort of conventional representation of some way to get the draft springs and followers in. And it is, of course,—would be entirely inadequate as a practical construction, and I should say only just a conventional representation of what the draftsman or somebody conceived as a way in which he could get that in.

But in that case, those bolts or clips, or whatever you call them, 24, in the first cross patent, I guess—27 in the second one—those are still the vertical stop lugs, as they correspond to that—if you take Mr. Decker's suggestion, which you might adopt in the cheek plates of the prior art,—why, you would have the vertical stop lugs, and those ordinary cheek plates; and yet he has got a horizontal yoke, or what corresponds to a yoke, that is, there is a loop form—it is either a yoke or some formation of draw bar which is equivalent to a draw bar and yoke. He has got that horizontally, and yet he has got his lugs vertically at the sides of it.

Now, that means he has got to have his followers, instead of passing up and down through that yoke so that they can be
162 easily withdrawn, they pass crosswise with it, and they make an "H" shaped horn above and a horn below on each side. And those little horns stick out from the body of that plate and have got to take the whole strain of the draft gear.

Now, that means that those little corners are all there is to take

the strain. Of course, as I say, they are interlocked so that they cannot be slipped vertically, anyway.

Now, by a sort of juggling process, Mr. Decker showed how you could get them out, by taking the spring out from between them, and then turning them around endwise, and then slipping them down through. Even at that you could not take one out at a time, that is, you could not—you cannot turn one of those around endwise, unless you turn them both, and get space enough to get it out.

It is a drawing that you can—you can very handily juggle it over with this model, but it would be much more difficult if the follower should weigh fifty or sixty pounds, more or less.

By the Court: Is that all with the Frost?

(By the Witness:) That is all, except in most of the figures there is nothing shown to keep the springs in place. They would simply drop out.

Now, in Figures 5 and 6 of the patent 510,854 there are those lugs or projections,—little projections on the—bosses is the best thing to call them—on the face of the follower plates that would center the springs and keep them from dropping out, but by the same token it would make it very hard to get the springs out or in. If that spring is unbroken, you have got to compress it, and these springs are pretty hard things to handle that way. You have got to compress it enough to crowd it past those lugs. I think that is all I have to say about the Frost.

By the Court: Now, after the Frost—

163 (By the Witness:) Now, comes Reagan. This is 491785.

By the Court: That is a draft gear patent?

(By the Witness:) That is a draft gear patent, yes. Now, that has the usual cheek plates with the usual vertical lugs, and, consequently, the follower is horizontal, its side end connected to engage with the lugs, and the yoke is vertical, and consequently one end of the yoke lies directly under the springs and followers, and you cannot get them out. There is no way to get that apart except to either take the whole rigging off, or else to disconnect the yoke from the draw-bar and slip the yoke back and take those practically off the car, the draw-bar and yoke, and then you can get the other things out. But I think it is that one with reference to which—in response to a question whether it didn't show a yoke connected to the sides of the draw-bar in which you could take these things out, Mr. Decker said "Yes"; by the sides he meant the top and bottom.

By the Court: Upper side and lower side?

A. Upper side and lower side. When you are talking about the yoke connected to the sides in this case, it means connected with the sides and not connected with the top and bottom. It means sides distinguished between top and bottom because that is what makes the yoke open at the bottom so you can get these things out. In this construction the cheek plates have to be vertical, at the two sides, and the yoke is horizontal at top and bottom. The thing is completely encased—that is, the springs and followers absolutely boxed in with no way to get your box open except to pull it to pieces.

By the Court: Well, is that all you want to say about the rigging?

164 A. I guess that is enough about the rigging.

By the Court: Do you want to say anything about the Simmons patent?

A. Yes, I thought perhaps I would take that last because that is a little different from the others, little more different, perhaps.

By the Court: Very well.

By the Witness: But I think——

By Mr. Neave: Miner and Emerick.

By the Witness: Miner is the only one left.

By the Court: Very well.

(By the Witness:) Now, that is the same thing. It has the cheek plates with the vertical lugs, and consequently the followers are horizontal, and it is their side ends which stick out to engage in the lugs, and the yoke, if it is a yoke, is vertical. In this case, it is practically a built up yoke made of a top strap and bottom strap, so in that connection the way you could get the springs and followers out, by taking the yoke to pieces. You cannot get them out with the yoke and draw-bar remaining connected, and that is principally characterized by a yoke you take to pieces as distinguished from a construction where you have access without taking anything to pieces. I think that is enough.

By the Court: Do you want to say anything about the Emerick Patent?

(By the Witness:) Yes. Emerick is later, and I will speak of that after. I will take Simons now, and that again has the vertical—has the vertical yoke and vertical stops, and, of course, the horizontal followers with the ends engaged, but this was directed to a special construction with the idea of getting the draft right in the middle line of the sills, and to do that he had to cut a big hole through his sill, a hole as wide as the followers are wide. Now, that

165 probably, if there is room on the car, if you take off those confining bolts, those confining angle pieces 13, it probably could be driven out in a horizontal direction from between the yoke and drawbar, but it is quite a question whether there would be room on the ordinary car or not, but I should say that the principle—that is directed to an entirely different theory of construction. That is, his idea was not to use anything corresponding to cheek plates or pocket, or anything of that kind, but to cut a hole right through your draft sills, and get your bearing right on that, the draft sills themselves. Of course, the suggestion made in connection with the model, that might be termed from a horizontal vertical position, doesn't apply at all. As a matter of construction, you couldn't make that construction as a practical thing with the yoke horizontal and the followers vertical, because you bring one of your sills right under the other, and hanging in the air it wouldn't be a sill at all. It would be just dead wood hanging on the bottom of the car.

By the Court: That is what is called the I-beam?

A. Yes, two I-beams. One of those I-beams would be simply down in the air below the other.

By the Court: Sills?

A. Yes, they are sills, draft sills or I-beams. They are the main longitudinal sill that the draft is applied to, supposed to be.

Now, coming to the Emerick, that is a departure from all these other ones in that it has the horizontal yoke and it has the vertical followers at top and bottom ends engaged by stop projections which project in from the sides above and below. These stop projections come in from each side above and below. It is practically the same as shown over here (indicating). Now, those stops cannot go right up and down because of the yoke, but they come crosswise. These two above the yoke engage the upper end of the follower, and
166 the corresponding one under the yoke engages the lower end of the follower, and the same at this end, so instead of the usual there are no other——

By Mr. Phillips: Identify what you are talking about.

A. Talking about Exhibit No. 4.

By Mr. Neave: Number five.

By the Court: The witness is illustrating on No. 5. From which end?

By Mr. Phillips: It does not make any difference.

By the Court: Yes, on number five. The iron casting, number five.

By Mr. Phillips: The iron casting, number ten.

By the Court: Yes. Well, is that all?

A. Well, it might be suggested that that merely amounted to the cheeks in a vertical position and transferred to a horizontal position, and then cut them in two, and then fasten them together again. That is about what it amounts to.

By the Court: That is exactly what it is, isn't it?

A. Yes, it would amount to that. You could get at it that way if you wanted to, but that involves an entirely new design for a special purpose, to do that.

By the Court: Yes.

By the Witness: I think that is all.

Q. 3. Does the model I now show you correctly illustrate the draft gear as shown in the Emerick Patent?

A. Yes. I think it is an exact copy made to scale, but I have not scaled it up to be sure.

167 Q. 4. I offer this model in evidence as Plaintiff's Exhibit No. 17, Model of the Emerick Device.

In this Emerick device, can the followers and springs be removed without first disconnecting the yoke from the draw-bar?

A. No, they cannot, by reason of the fact that bolts are used with the Emerick Patent, on—well, Figure 4 shows it. Bolts 24, that run from one follower plate to the other through the springs—those the—there is a bolt that runs from one follower plate to the other one through the two follower plates and through the springs, and project beyond the rear follower plate where they are held by nuts. Those bolts being to take up the compression of the spring, but when the spring compresses they simply slip along through it. Now, those nuts, the ends of bolts, are above and below the rear end of

the yoke and they cannot be supported in any way, and consequently you cannot—although you might slip the followers out, if the bolts weren't there, the bolts would simply come against the yoke and prevent you from taking them out. You cannot take it out, simply because——

By the Court: That compresses?

A. No, the compression doesn't do any good, because that shortens the ends of the bolts, and this end of the bolt is stopped from moving the end of the draw-bar, so you have to disconnect your draw-bar from the yoke to get it out this way by slipping the yoke back a few inches. There are the flanges——

By the Court: They make the guides for the cheek?

A. That is really the bottom of the thing, when it is in use, and they make the guides that support the followers. You see, they come right in here and close the bottom box enough to make a bearing upon—it goes along the two edges and makes a bearing for the followers.

By the Court: What?

168 A. Making a bearing for the followers.

By the Court: Yes.

By Mr. Neave: That is all of the direct examination.

By the Court: Cross-examination.

Cross-examination by Mr. Phillips:

X.Q. 1. I want to ask one question about the Perry 622 Patent.

By the Court: About which patent?

By Mr. Phillips: The Perry Patent.

By the Court: The first patent?

By Mr. Phillips: The first patent.

By the Court: That is the patent on bumpers.

By Mr. Phillips: Referring to the block shown in Figure 3, Figures 2 and 3——

A. That is the distance block.

By Mr. Phillips: Distance block.

By the Court: Yes. I have got it.

X.Q. 2. The specification says from lines 46 to 52: "These blocks form stops or limits beyond which the spring cannot be contracted when forced into either direction, and by this means the spring is relieved of being overworked from either direction from a pull or push of the end." Now, what else do the spacer blocks in Byers patent do?

A. Nothing. You will excuse me. There is one thing I forgot: The spacer block in the Byers, that is used with twin springs, also serves to keep the two springs apart. That is all.

By the Court: But the function of it is, as Mr. Phillips says?

By the Witness: Yes. I forgot that for a moment; it is simply an end stop; that is all.

169 X.Q. 3. You mean in your last answer, the structure in the Byers patent is more specifically like the distance blocks shown in the patent to Hinson, No. 635,322?

A. Yes. In that case the Hinson one is regarded as separating the springs as well as a stop.

X.Q. 4. Now, Mr. Livermore, in regard to this horizontal and vertical stop: Here is a model I understand to represent the Perry device, which has been marked Defendant's Exhibit K. Do you find that the lugs in this model are horizontal or vertical?

A. They are vertical, but this horizontality of the lugs isn't so much account as that of the follower plate. The lugs there are vertical to engage sidewise in projecting ends of the follower plate.

X.Q. 5. Sidewise in projecting ends?

A. Yes.

X.Q. 6. Well, here is a model of one of the cheek plates shown in the blue prints annexed to the interrogatories filed by the plaintiffs in this case, called Defendant's Exhibit 8. Isn't it true that the sides of the followers rest against the lugs 5, 5, 5?

A. Sides of the followers, yes.

X.Q. 7. Yes.

A. Yes.

X.Q. 8. And they have a greater—as a matter of fact, they have a greater vertical bearing than they have horizontal bearing?

A. Yes.

X.Q. 9. Yes. Why do you call them horizontal lugs when they have a greater vertical bearing?——

A. I say——

X.Q. 10. —than they do horizontal bearing?

A. I tried to explain that it made not so much difference with reference to the lugs as with reference to the follower plates. These project in to engage—it is more that they are above and below the yoke so that they engage at the top and bottom. They are part of what might be termed a complete horizontal bar.

X.Q. 11. Yes.

A. The others are part of what might be termed a complete vertical bar. Now, those might be either—that is to say, that plate with the key, which would serve to engage a horizontal——

By the Court: Just what Mr. Phillips said?

170 A. Exactly; but then all this other stuff, this groove here, would be superfluous, and, of course, you would have your vertical yoke in connection with it. That, so far as the stops are concerned,—why, of course, either one would work either way.

X.Q. 12. It seems to me you are trying to draw a distinction as a matter of words. I do not see the difference between the engagement of the follower plates with the lugs in this old Perry model.

By the Court: Is that the model that had the tail piece?

A. Yes.

By Mr. Phillips: Yes. Of course, that is one of the first on draft gears in the art.

By the Witness: Now, if you assume——

X.Q. 13. Just one moment. I do not see the difference between engagement there and the engagement here. (Indicating.) There is a channel cut in here, of course, for the yoke to pass out?

A. Yes.

X.Q. 14. But these are just as much vertical lugs as those are?

By the Court: Yes.

X.Q. 15. Is that true, Mr. Livermore?

A. Oh, certainly, the engaging space is a vertical space.

By the Court: Yes.

By the Witness: It has horizontal dimensions. It is a vertical plane.

X.Q. 16. But in the patent in suit the lugs would extend clear across, so they have a horizontal bearing?

A. Extend clear across this way. (Indicating.)

171 X.Q. 17. Clear across that way? (Indicating.)

A. To the matter on the other side.

X.Q. 18. Clear across the top and bottom?

A. Yes.

By the Court: The lugs? The what do? The followers?

By Mr. Phillips: In the patent in suit, the lugs, which are integral with the casing, form the end walls of the casing, and extend clear across so that they have horizontal bearing clear across.

By the Court: In other words, it is the end of the box?

By Mr. Phillips: The end of the box, precisely.

By the Witness: They go clear across from side to side.

By the Court: Making the end of the box?

By Mr. Phillips: Yes.

By the Witness: But it is the one lug above the yoke and the other below.

By the Court: Yes.

X.Q. 19. These draft riggings, Mr. Livermore, the actual working parts, operating parts, are the drawbar, yoke, followers, springs, are they not?

A. Those are the moving parts.

By the Court: Well, are they the operating parts?

By Mr. Phillips: Operating parts?

A. Well, of course, they need the stops to make them operate.

X.Q. 20. The same as you need the ground to walk on?

A. No; a little more than that. Yes, of course, the same as we need the ground to walk on, perhaps, yes.

X.Q. 21. Yes. Now, here is a combination of yoke, followers, springs, and another combination of yoke, followers and springs. One is the Byers, and the other one is Simons. Now, do you

172 see a great amount of difference between them?

A. No, there is practically no difference between the parts, except, of course, the cheek is turned quarter round, that is all.

X.Q. 22. As I hold it in my hand, is there any difference?

A. No, when you cover up the difference, there isn't.

X.Q. 23. That is just the difference?

A. One is quarter round.

X.Q. 24. It doesn't affect the working parts at all. They perform their functions just the same?

A. These co-operate just the same, certainly.

X.Q. 25. Referring to the Miner patent and to Plaintiffs' Exhibit 17——

A. The Emerick, isn't it?
X.Q. 26. Emerick, yes. I will ask you if you find shown in igures 6—or Figure 7, the bolts and lugs which have been inserted side the springs in this model?
A. No, but the model doesn't represent Figures 6 and 7 at all. It a model—there are two constructions on the Emerick Patent, and at is the——
X.Q. 27. That is the model of the one that has model in it?
A. That is the model of the construction showing Figures 1, 2 nd 3. Why, I would just as soon say—why, the construction own in Figures 6 and 7 is a tandem spring construction. The e shown in Figures 1, 2 and 3 is a twin spring construction. On e tandem spring construction—this model is the model of the twin ring construction.
By the Court: Tandem spring doesn't use it?
A. No.
X.Q. 28. Mr. Livermore, it was testified in the suit at Chicago that was the intention of the patentee to take down the followers and rings in the Emerick Patent as a unit, and that the bolts, which roject at the left of the follower plate in Figure 4, were a mere mis-ke of the draftsman. Do you see anything unreasonable in such a pposition?
A. Why——
X.Q. 29. In other words, the bolts should be countersunk. They won't slip by.
73 By the Court: Let them right in there and then you have got it.
By Mr. Phillips: That is it.
A. Get them in the way the heads are let in. The heads are let n to prevent the thing from turning.
By Mr. Neave: Prevent the heads from turning?
A. Prevent the bolt from turning when you are turning the nut p on them.
By the Court: When I saw that sunk in here I had it in my mind o ask you why you didn't sink that in it.
By the Witness: It would be possible, of course, to make a coun-ersink to let the nut turn in it, and use a socket wrench. You ould have to use a socket wrench to turn down in it. You couldn't et at it with an ordinary monkey wrench. It requires special tools, n other words.

Redirect examination by Mr. Neave:

Q. 30. Mr. Livermore, in the Byers and Emerick structures I nderstand that the followers do not extend out beyond the sides of he yoke and that they come against stops or lugs arranged hori-entally above and below the yoke, is that right?
A. Yes.
Q. 31. Do you find that in any of the prior patents?
A. No.
By the Court: In any of the what?

By Mr. Neave: In any of the prior patents.

By the Court: Oh, yes. Repeat that question. I do not know whether I got that or not.

Q. 32. The first question was this: In the Byers and Emer-
174 ick structures I understand that the followers do not extend out beyond the sides of the yoke——

By the Court: And what?

Q. 33. —and that they come against stops or lugs arranged horizontally above and below the yoke. He said that was true.

By the Court: Yes.

Q. 34. And in this Emerick structure you cannot take the followers and springs out from below without both unscrewing the nuts and also taking the bolts out that are passing from one follower to another?

A. You cannot take the springs out without that, no. That is the fact, even if it is countersunk, and you take the thing out as a unit you must take the springs out before you can take the bolts off.

Q. 35. And to get the bolts out you must take the whole coupler out first? The whole structure has to be taken down before you can get those bolts out?

A. You have to take—yes, you have to take that unit, the pair of follower plates and springs out from the draw bar and yoke, and that involves the separation of the draw bar and yoke before you can do it.

By Mr. Neave: That is all.

By the Court: You spoke of having testimony tending to show the carrying back of the Emerick invention.

By Mr. Phillips: I have got a stipulation from Mr. Neave.

By the Court: You stipulate——

By Mr. Phillips: That we can put it—that certain of the patents which we have set up in defense, that the date of the application may be taken to be the date which is stated on the printed copy, so that we won't have to file the copy of the file wrapper. All the proof we should offer would be documentary proof. We won't take any time.

175 By Mr. Neave: Mr. Phillips, you do not put in evidence the depositions that were taken out of court?

By Mr. Phillips: We do certainly.

By Mr. Samuels: We do.

By Mr. Phillips: They have been filed.

By Mr. Neave: I think this is what His Honor was asking. There have been depositions taken out of court tending to date back their invention, and that is in the form of depositions.

By Mr. Phillips: I do not understand we have to offer these depositions taken de bene esse. It is part of the case. They have been filed with the clerk according to the rule.

By the Court: They have?

By Mr. Phillips: Certainly.

By the Court: So that you can introduce them or not?

By Mr. Phillips: May it please Your Honor, to avoid all mis-

understanding, we offer in evidence all the affidavits which we filed under the rule.

By Mr. Neave: Depositions, not affidavits.

By Mr. Phillips: Yes, depositions. I didn't understand it had to be done. I thought depositions taken——

By Mr. Neave: That is all, Mr. Livermore.

By Mr. Phillips: I just wanted to ask one question, if Your Honor will pardon me, just a moment.

By the Court: On Mr. Livermore?

By Mr. Phillips: On Mr. Livermore.

By the Court: Very well.

Recross-examination by Mr. Phillips:

X Q. 36. To clear up this matter of the Emerick patent, as I understand it, if the bolts,—if the nuts on the left hand end of the bolts 24 and 25 be countersunk, to avoid contact with the
176 yoke, 21, then the followers and springs can be removed from below, in a unit?

A. Yes.

X Q. 37. Without taking any part of the rigging to pieces?

A. Yes.

X Q. 38. Yes. Now, as shown in Figures 6 and 7, which shows a tandem arrangement——

A. Yes.

X Q. 39. A duplicate, really, of what is shown in Figure 4, each set could be taken down as a unit, or separately, because they do not have the bolts which go through the springs in Fig. 14?

By the Court: He showed that before.

By Mr. Phillips: That is my understanding. Is that Mr. Livermore's understanding?

By the Court: Well, let him say it again.

A. Yes, that is my understanding.

By Mr. Phillips: No further cross-examination.

By Mr. Neave: That is all.

By Mr. Neave: Plaintiff offers in evidence page 36 of the World Almanac for 1915, and it is marked Plaintiffs' Exhibit No. 18 Calendar. It is merely a calendar I am putting in, to refer to dates.

The Plaintiff has taken the deposition, out of court, of a Mr. Julian, in answer to some of the depositions that the defendant has taken. I assume that that is considered to be in evidence. It is filed.

Mr. Kerr states that yesterday he found, in looking over the copy of the testimony, that, when he made the offer of Exhibit No. 11 he did not specifically include the Byers letter of December 5, 1899, which was testified to by the witness. So that is specifically offered as a part of Exhibit 11.

There seems to be some confusion as to whether or not the Byers time books were specifically offered in evidence, and in order
177 to clear up that confusion we offer them in evidence now as Exhibits 12 and 13.

By the Court: That the witness testified from last night.

By Mr. Neave: Yes, your Honor.

By the Court: Yes; they were offered.

By Mr. Neave: It is a mere question of the record, to be quite sure. That is all.

By Mr. Kerr: And I will ask that the letter recommending McGill be marked as Plaintiffs' Exhibit No. 13½.

By Mr. Samuels: Defendant's Exhibit Certified Copy of the Decision in the T. H. Symington Company versus William H. Miner, was offered, without marking. It is now made Defendant's Exhibit Q.

By Mr. Neave: I assume that that will be received with the same objection that I made to it when it was first referred to?

By the Court: I do not know that it is of the least consequence, one way or the other, if you put it in evidence or not.

By Mr. Phillips: I understand that Mr. Neave is willing to agree that the date of the application which eventuated in the grant of the Hinson Patent, No. 635,332, may be taken to be the date stated as the date of application, in the printed Patent Office copy which has been offered in evidence.

By the Court: What is that? February 3, 1899?

By Mr. Phillips: February 3, 1899. That this stipulation shall apply to the Simons Patent, 627,540, the date stated being——

By the Court: September 5, 1898.

By Mr. Phillips: 1898. Also, to the Pilcher Patent.

By the Court: To which patent?

By Mr. Phillips: Pilcher, 616,965.

By the Court: April 7, 1898.

By Mr. Phillips: Yes. 616,965, the date being April 7,
178 1898. May it please your Honor, we have ordered a certified copy of the file wrapper of the Emerick Patent, but the Patent Office has been negligent about sending it. It will be here in a couple of days, and I should like, your Honor——

By the Court: To be put in evidence?

By Mr. Phillips: Yes.

By the Court: No objection, Mr. Neave?

By Mr. Neave: No objection.

By the Court: Exhibit offered, and marked "R."

By Mr. Phillips: My associate says that he is not quite sure that all the models to which we have referred have been formally offered. I think that my brother Neave will consent—you see, around the court room here we do not——

By Mr. Neave: It is not necessary to keep anybody here for that. I would like to have them all marked, so that we may be sure of what is in.

By Mr. Phillips: They are all marked, they are all tagged.

By Mr. Neave: These do not seem to be. (Indicating.)

By the Court: The models that have been referred to, we will consider them all in.

By Mr. Neave: I have no objection to that. There are a great many models around here, that have not been put in.

By Mr. Phillips: We will get them in.

By Mr. Neave: There is no use of troubling your Honor.

By Mr. Phillips: I think they are all filed.

By the Court: Now, if that puts them all in, what do you want to say about argument?

(The Court and counsel conferred as to the date of argument.)

By Mr. Kerr: Your Honor, Mr. Phillips has consented that we may use copies of the letters of December 7 and December
179 11, 1899, which are in the letterpress copy book of the National Malleable Castings Company, and which comprise parts of Exhibit 11.

By the Court: You can have copies made, and have them compared, and let counsel see if they are all right.

By Mr. Kerr: Thank you, sir.

Which was all of the evidence given, on the trial of the above entitled cause by the parties thereto.

180 District Court of the United States, District of Maine.

In Equity. No. 705.

On Patent No. 673,419.

THE NATIONAL MALLEABLE CASTINGS COMPANY and JACOB J. BYERS, Plaintiffs,

vs.

THE T. H. SYMINGTON COMPANY, Defendant.

Notice.

Please take notice that the undersigned will take testimony on behalf of the plaintiffs in the above-entitled cause, at the offices of George I. Haight, Esq., Rookery Building, Chicago, Ills., before C. G. Ranz, Notary Public in and for the County of Cook, State of Illinois, upon Friday, December 18, 1914, at 10 a. m., in accordance with the statutes in such cases made and provided, and under the Revised Federal Equity Rules.

The witnesses to be examined are D. A. Lawson, A. Julian, E. A. Phillips, E. A. Eulass and A. R. Connor, all of Chicago, Ills.

You are invited to attend and cross-examine the witnesses that may be produced.

Very respectfully,

CHARLES NEAVE,
Counsel for Plaintiffs.

To Messrs. Steuart & Steuart, 809 Maryland Trust Building, Baltimore, Md.

New York, December 14, 1914.

181 The deposition of Frederick Julian, taken before me, E. A. Eulass, a Notary Public within and for the County of Cook, in the State of Illinois, on the 18th day of December, A. D. 1914, between the hours of ten o'clock A. M. and 3:30 o'clock P. M., at room 627, in the Rookery Building, in the City of Chicago, in said County and State, pursuant to the annexed notice and stipulation, and to be read in evidence in behalf of the plaintiffs, in a suit pending in the United States District Court, District of Maine, in which The National Malleable Castings Company et al. are plaintiffs and The T. H. Symington Company is defendant.

Appearances:

Mr. Edwin F. Samuels, of Baltimore, Maryland, for the defendant;
Mr. George I. Haight, of Chicago, Illinois, for the plaintiffs.

FREDERICK JULIAN, of lawful age, being by me first duly sworn, testified, in answer to questions propounded to him by counsel, as follows:

Direct examination by Mr. George I. Haight:

Q. 1. What is your name?
A. Frederick Julian.
Q. 2. Where do you reside?
A. Chicago, Illinois. 5941 Indiana Avenue.
Q. 3. What is your business?
A. Court Reporter.
Q. 4. By whom are you employed?
A. I work for myself.
Q. 5. Were you one of the reporters who took the testimony in the suit of The T. H. Symington Company versus William H. Miner, No. 30,700, in Equity, in the District Court of the United States for the Northern District of Illinois, heard before his Honor Arthur L. Sanborn, one of the Judges of said Court, on or about the 18th, 19th and 20th days of February, 1914?
A. I was.
Q. 6. At that time and in that case did one W. Scott Wright testify?
A. Yes, sir.
182 Q. 7. On that occasion, in that same case, did one William H. Emerick testify?
A. Yes, sir.
Q. 8. And at that time and in that case did one Charles S. Darrach testify?
A. Yes, sir.
Q. 9. Did you take the testimony, or any of the testimony given by each of these three witnesses?
A. Yes, sir.
Q. 10. In what manner did you take that testimony?
A. In shorthand.

Q. 11. Have you the books containing your shorthand notes of that testimony?

A. I have.

Q. 12. On that occasion was Mr. Charles S. Darrach asked the following question, and did he give the following answer:

"Q. Can you describe the model in a general way? A. I cannot describe it in detail, except it was a model which consisted of removable keys, with castings or side cheek plates, as they were called, which enabled the removal of the coupler, also the yoke and the springs, in an easy manner, which facilitated repairs to the draft rigging."

By Mr. Samuels: Objection is made to the testimony of this witness, on the ground that it is secondary evidence, hearsay, and incompetent, being merely an attempt to prove the typewritten transcript of certain stenographic notes alleged to have been taken by the witness according to statements of witnesses in a previous suit, to which the plaintiffs in the present suit were not parties; that the record referred to is not an official record of the Court, but merely the notes taken by an unofficial stenographer, employed by William H. Miner, defendant in that suit, or his attorney; the testimony now offered, is further incompetent, irrelevant and immaterial, because it purports to be nothing, and is offered as nothing, more than a record of the testimony of a certain witness, Mr. Charles S.
183 Darrach, given in a previous trial; that the testimony of this witness to all of the facts testified to in the previous case has been taken and filed in the present suit; that counsel for the plaintiffs was duly notified and was present at the examination of the witness, and that he cross-examined him on the subject of his direct testimony in that case, and also as to the facts which he had stated in his testimony in the previous litigation, entitled "Symington versus Miner"; that counsel for the plaintiffs in this case had with him, and referred to, at that time, a record of the testimony in the previous case, and used that record as a basis of cross-examination; that before taking the testimony of Messrs. Emerick, Wright, and Darrach, in this case, Mr. Samuels, counsel for the defendant, wrote to Messrs. Fish, Richardson, Herrick & Neave, counsel for the plaintiffs, with a view to avoiding the necessity for re-examining the witnesses, and requested that the testimony taken in Symington versus Miner be stipulated into the present case, a carbon copy of that letter being now introduced herein and marked "Samuels' Exhibit A," letter of October 28 to Messrs. Fish, Richardson, Herrick & Neave; this letter also requested an extension of time, in case counsel refused to admit the testimony, the extension being for the purpose of taking the testimony of these witnesses, Messrs. Emerick, Wright and Darrach, if it were not to be thus admitted. Five days later, having received no answer, Mr. Samuels, counsel for defendant, wired counsel for plaintiffs, requesting answer immediately. This telegram is introduced as "Samuels Exhibit B." An answer was received by wire, three days later, November 5th, as follows:

"Will not stipulate testimony of Emerick and others but will consent to short extension of time."

184 This telegram was introduced as "Samuels Exhibit C." Following this, counsel for defendant called Messrs. Fish, Richardson, Herrick & Neave on the telephone, in New York, to obtain their views as to the length of extension which should be granted, and advising them that the testimony would be taken, and on the same day he advised them by letter of the date of the testimony, and transmitted to them a stipulation extending the time. A carbon copy of the letter of November 5, made in connection with the original which was sent forward, is introduced and marked as "Samuels Exhibit D," and a similar copy of the stipulation marked "Samuels Exhibit E." On return of the notice, the testimony of these witnesses was duly taken. Counsel for plaintiffs attended and cross-examined in connection with the record of their previous testimony taken in Symington vs. Miner, and which is now being offered by the stenographer who reported it, in the interest of Mr. Miner. This typewritten copy was reviewed by counsel for the plaintiffs in this case and duly filed. So that the testimony now offered can, at the very best, be viewed only as a duplication of the testimony now in the case, and as matter which was to be introduced instead of that testimony, and which counsel now offering it has refused to have so introduced, making it necessary for defendant to go to the expense and submit to the delay incident to re-examining the witnesses.

(The said papers so offered by counsel for defendant were thereupon marked by the Notary as "Samuels Exhibits A to E," inclusive, respectively, and are hereto attached and returned herewith.)

By Mr. Haight: We give notice that we will make motion to strike out most of the recital of defendant's counsel as immaterial; and, for the information of the Court, we state that this is merely the simple case of impeaching the testimony of witnesses by showing previous contrary statements, the usual foundation for such impeachment having been laid in the cross-examination of each of the witnesses, Emerick, W. S. Wright and Darrach, and to prove the previous contrary statements made in another proceeding, relative to the subject matter in this proceeding involved, we are calling the reporter who took the testimony of these witnesses, who, refreshing his memory by his shorthand notes then taken, makes proof of the previous contrary statements. (To the witness:) Now will you answer the question?

185

A. Mr. Haight, I want to be sure. You say in that answer it was a model which consisted of removable keys. "Removable"?

By Mr. Haight: Yes.

By Mr. Samuels: Further objection is made on the ground that the subjects matter in litigation in the two suits are different; in the first instance the question to be determined was the infringement and validity of the Emerick patent, No. 693,643; and the question now in point is the validity and infringement of the Byers patent, No. 673,419.

A. Mr. Darrach was asked that question, and he made that answer.

By Mr. Haight:

Q. 13. Mr. Julian, in the case hereinbefore mentioned, tried before Judge Sanborn, was W. S. Wright, when on the stand, asked the following question:

"Q. You were discussing with him at that time some ques-
186 tion of difficulty in removing that particular gear of the American Continuous Type from cars, as I understand you?"

And did he make the following answer:
"A. No, sir."

By Mr. Samuels: The same objection made to the previous question is offered in connection with this one.

A. He was asked that question, and he made that answer.

By Mr. Haight:

Q. 14. And on that same occasion was Mr. Wright asked the following question:
"Q. So that the difficulty you were discussing was simply a question of wear of parts, was it?"
And did he make answer:
"A. Yes, sir."

By Mr. Samuels: The same objection.

A. He was asked that question, and he made that answer.

By Mr. Haight:

Q. 15. On that same occasion was W. S. Wright asked the following questions, and did he make the answers following:
"Q. Did you ever discuss with Mr. Emerick any draft rigging prior to the time you saw the model, as you say, in the summer of 1899?

"A. No, sir, not particularly.
187 "Q. Well, in any way?
"A. No, sir, not in any way.
"Q. Not at all?
"A. Well, I should say no."

By Mr. Samuels: The same objection.

A. He was asked those questions, and he made those answers.

By Mr. Haight:

Q. 16. On that same occasion was Mr. Wright asked the following question:
"Q. Please examine the drawing of the patent and tell whether this illustrates the device which you have described."
And did he answer:
"A. No, I do not think I could without seeing a model."

By Mr. Samuels: The same objection.

A. He was asked that question, and he made that answer.

By Mr. Haight:

Q. 17. And on that same occasion was the following question asked Mr. Wright, and did he make the answer following:

"Q. Tell those different parts he took apart?

"A. He had two little followers in there, and a draft spring. That was three parts that went up in between these yokes, and his yoke band was brought around there, and fastened in his key."

By Mr. Samuels: The same objection.

188 A. I have one little change in there, in the answer. He was asked that question, and he made this answer: "He had two little followers in there, and a draft spring. That was the three parts that went up in between these yokes, and his yoke then was brought around there, and fastened in his key." Instead of "band" I have it "then."

By Mr. Haight:

Q. 18. In the trial of Symington versus Miner, hereinbefore in this examination identified, was Mr. Emerick, when on the stand, asked the following questions, and did he make the following answers:

"Q. Are you the William H. Emerick who is the patentee in the Emerick patent Number 693,643?

"A. I am.

"Q. When, to the best of your recollection, did you make the invention described in the patent?"

Then the question continued by Mr. Samuels:

"The question refers to the invention"——

I skip those remarks——

"The question refers to the invention in Patent Number 693,643.

"The Court: The question is when you invented this?"

Then the question, by Mr. Samuels:

"Q. When did you first conceive of this invention?"

And did Emerick answer:

"A. I first conceived the idea of that invention in the summer of 1899."

By Mr. Samuels: The same objection.

189 A. Mr. Emerick was asked those questions, and he made those answers.

(At this point, by agreement of counsel for the respective parties, the further taking of said deposition was adjourned to 1:30 o'clock P. M. of the same day, at which time the parties again met, at the same place, and resumed the taking of the deposition, as follows:)

By the Witness: Before my cross-examination begins, I would like to make one slight modification of an answer that I made.

By Mr. Samuels: Go ahead.

By the Witness: Mr. Haight asked me if Mr. Wright was asked this question, and if he made this answer: "Q. Tell those different parts he took apart. A. He had two little followers in there, and a

draft spring. That was the three parts that went up in between these yokes, and his yoke then was brought around there, and fastened in his key." And I answered saying that he was asked that question and made that answer. I want to say that the witness also said, following that, "His key was another little part he took out,—and the couplers." I simply want to add that, to make it literally correct.

By Mr. Haight: Direct examination closed.

By Mr. Samuels: Notice is hereby given that a motion will be made to strike out this testimony.

Cross-examination by Mr. Samuels without waiving objections:

X Q. 19. You have stated that you were employed to record the proceedings at the trial of Symington versus Miner before the United States Court for the Northern District of Illinois, Eastern Division, Equity Number 30,700, in February, 1914. By whom were you employed?

A. Mr. E. A. Eulass.

X Q. 20. Do you know in whose behalf you were record-
190 ing the testimony?

A. I understood that Mr. Eulass was reporting it for Mr. Haight, and I have a notation in one of my shorthand books, under date of Wednesday, February 18, 1914, showing a case, T. H. Symington Company versus W. H. Miner, before Judge Sanborn, in the District Court of the United States for the Northern District of Illinois, showing that Mr. Haight represented the defendant, and that Mr. Harris also represented the defendant.

X Q. 21. You have referred to certain stenographic note books. Who made these notes?

A. I made the notes.

X Q. 22. All of them?

A. All of them in those books.

X Q. 23. Two of the books are marked "Frederick Julian". The other book, numbered 44½, is not marked, and the notes have a slightly different appearance. Did you make all these notes?

A. Yes, sir.

X Q. 24. How do you account for the difference in the books, and the fact that one is not marked, and the slight difference in writing?

A. I will explain that. Without exactly giving the date, I was down at the Federal Court on this case, and I expected, when I went down there, to be there only about an hour. It happened that I stayed down there, I think, two and a half hours, or possibly three hours. A young man from our office came down there at about 4, or possibly 4:30, and I was just about out of any blank pages in the book that I was then writing, and I asked this boy, our office boy, to go out and get me a book as soon as he could. He came back in a short time with that book, and that was the book that I used at that time, and it only has the Symington case in it; I did not use it any more, because it is not one of my regular books. The difference in the notes is accounted for by the fact that the paper is rather rough in comparison with the other paper.

X Q. 25. Referring now to your notes, was the following question asked of Mr. W. H. Emerick:

191 "You say you disclosed this invention to Mr. Wright?"

A. Yes, sir.

X Q. 26. Read the following answer, and the following question.

A. The answer to that is "Yes, sir."

By Mr. Haight: Wait a minute. Are you through with the question?

By Mr. Samuels: He said "Yes, sir." Then I said, "Read the answer, and the following questions and answers."

By Mr. Haight: I object to the question, and move that the answer be stricken out, on the ground, first, that it is immaterial, irrelevant and incompetent; second, because in this proceeding it is merely hearsay; third, because no proper foundation has been laid; fourth, because it is not cross-examination; fifth, because what appears in the record in another transaction is wholly immaterial; sixth, because in this proceeding it is at best a mere self-serving declaration; and seventh, because the question in any event is not in proper form.

By Mr. Samuels:

X Q. 27. Did Mr. Wright answer "Yes, sir," and are the following answers and questions according to your record?

"Q. When did you disclose it?

"A. I talked to Mr. Wright from the time he started to work for the company until practically the filing of the patent.

"Q. How do you place the date when you first talked with Mr. Wright about the matter, and what was that date?

"A. I am quite sure Mr. Wright went to work for the company along about March or April, 1899.

192 "Q. Well, did you disclose it to him fully at that time?

"A. Yes, sir."

By Mr. Haight: The same objection, and the additional objection, that it is immaterial what the record shows.

A. Yes, sir.

By Mr. Samuels:

X Q. 28. And are they correct?

A. Yes, sir.

X Q. 29. Later in the testimony of Mr. Emerick, do the following questions and answers appear consecutively:

"Q. What do you know about it, and remember?

"A. I know that I conceived this idea in 1899, the early part of 1899.

"Q. When did you first talk with Mr. Wright about it?

"A. Well, I think it was about the summer or April,—the exact date I couldn't say, Mr. Haight."

By Mr. Haight: The same objection.

A. I have only one slight change in my notes, and I simply have

in the answer, "Well, I think it was along about the summer or April,—the exact date I couldn't say, Mr. Haight." The rest I have the same as you gave it.

By Mr. Samuels:

X Q. 30. Then this is a correct quotation of the questions and answers?

A. Yes, with the exception of the additional word that I have there.

X Q. 31. In the testimony of Charles S. Darrach do the following questions and answers appear consecutively?

193 "Q. Are you able to understand the drawings and the construction disclosed?

"A. I understand the principal features of this draft rigging of Mr. Emerick's, and I gather this information from his first conversation with me in regard to his draft rigging which he was working on at that time. He frequently talked to me about it. A good many times he would take his pencil and draw little sketches to make more clear what he intended to patent,—What he was working on.

"Q. What was the date of these conversations and disclosures?

"A. The first time I met Mr. Emerick was along in the early part, either March or April, of 1899, and I think it was along about the first time I ever met him that he took up the question of draft riggings, and told me, and I remember distinctly—I think it was the first time I ever saw him—that he was working on something that was going to revolutionize things in draft rigging. Of course I was interested in the maintenance of cars at that time, and I would naturally pay attention to what he was talking about. He would take a pencil and draw little sketches of what he expected afterward to make into models, which he did later."

By Mr. Haight: The same objection.

A. They do.

By Mr. Samuels:

X Q. 32. Are these correct?

A. They are correct.

X Q. 33. In the cross-examination of Mr. Wright, did the following questions and answers appear consecutively?

"Q. On any of these occasions since the spring of 1899
194 have you discussed with Mr. Emerick the subject of draft rigging in any way?

"A. No, sir, I do not know that I have, particularly."

By Mr. Haight: The same objection.

A. They appear that way in my record.

By Mr. Samuels:

X Q. 34. Is that correct?

A. Yes, sir, with the exception that in my notes I have it "on any

of those occasions," instead of "on any of these occasions." The rest is the same.

X Q. 35. Referring to the cross-examination of W. S. Wright by Mr. Haight, do you find the following questions and answers in sequence:

"Q. Yes. I am trying to find out, Mr. Wright, how it is that a man who has been dealing with different kinds of draft rigging every day, a busy man, a practical man, working in actual shop work, construction work, how it is that you reach back through the years, fourteen or fifteen years ago, and say that notwithstanding that the only thing that you have to fix as a milestone in your memory is the fact that you went to work in April, 1899, and that Mr. Emerick left in July, 1900, that you reach back there and say this thing occurred in the year 1899, and didn't occur in 1900, when the limits you fix continue into the year 1900? How do you do that,—other than say it was trouble with the American Continuous draft gear?

"A. That is right.

"Q. But you had trouble with that during both those years, so you say. Now, how do you fix it in view of that situation?

"A. I believe I said that I had it at the start, didn't I?

195 "Q. That is the way to fix it, is it?

"A. Yes, sir."

By Mr. Haight: The same objection.

A. Yes, sir.

By Mr. Samuels:

X Q. 36. Are they correct?

A. They are correct. There is a slight change. I have a "now," and one or two slight changes in that respect, which do not change the substance in any way.

By Mr. Samuels: Cross-examination closed.

FREDERICK JULIAN.

196 District Court of the United States, District of Maine.

In Equity. No. 705.

On Patent No. 673,419.

THE NATIONAL MALLEABLE CASTINGS COMPANY and JACOB J. BYERS, Plaintiffs,

vs.

THE T. H. SYMINGTON COMPANY, Defendant.

STATE OF ILLINOIS,
County of Cook, ss:

I, E. A. Eulass, a Notary Public in and for the County of Cook and State of Illinois, duly commissioned, qualified and authorized to administer oaths and to take and certify depositions,

Do hereby certify that the foregoing deposition of Frederick Julian was taken before me on behalf of plaintiffs, The National Malleable Castings Company and Jacob J. Byers, on the 18th day of December, 1914, at the office of George I. Haight, Esq., Room 627 Rookery Building, Chicago, Illinois, pursuant to the notice and by agreement of counsel.

I further certify that on said day I was attended by Mr. George I. Haight, of counsel for plaintiffs, and by Mr. Edwin F. Samuels, of counsel for defendant; also that I was attended by the said witness, who was of sound mind, and who was by me first carefully examined and sworn to testify the truth, the whole truth, and nothing but the truth; that the deposition of said witness was reduced to writing in the presence of said witness, from his statements, and in the presence of said counsel, being taken down by me in shorthand,
197 and that after the deposition had been reduced to typewriting it was read by the witness and signed in my presence.

I further certify that I have marked the exhibits introduced, and signed the same with my name.

I further certify that the testimony of said witness is material and necessary for the plaintiffs in the proceeding in the caption of said deposition named.

I further certify that I have retained said deposition in my possession for the purpose of sealing up and directing the same, and the certificate, with my hand, and sending the same to and filing the same in the United States District Court, District of Maine.

And I do further certify that I am not of counsel nor attorney for either of the parties to this suit, nor related to either of said parties by blood or marriage, nor in any way interested in the event of this controversy.

In witness whereof I have hereunto set my hand and affixed my seal of office this 18th day of December, 1914.

E. A. EULASS,
Notary Public.

My commission expires ——.

(Here follow diagrams marked pages 199 and 200.)

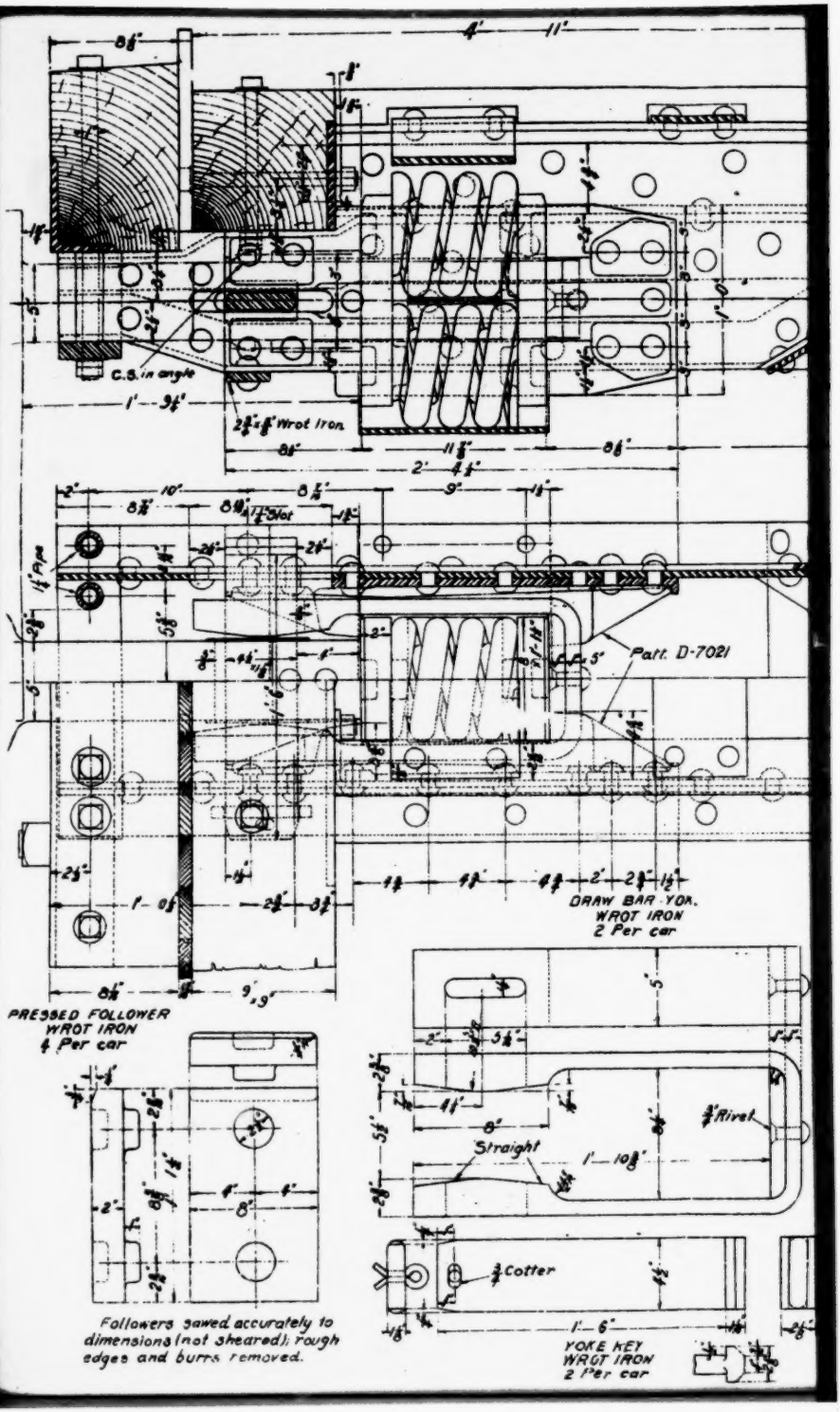
C.S. in angle
2½"x⅝" Wrot Iron
Patt. D-7021
DRAW BAR YOK.
WROT IRON
2 Per car
PRESSED FOLLOWER
WROT IRON
4 Per car
Straight
⅞" Rivet
¾" Cotter
YOKE KEY
WRGT IRON
2 Per car
Followers sawed accurately to dimensions (not sheared); rough edges and burrs removed.

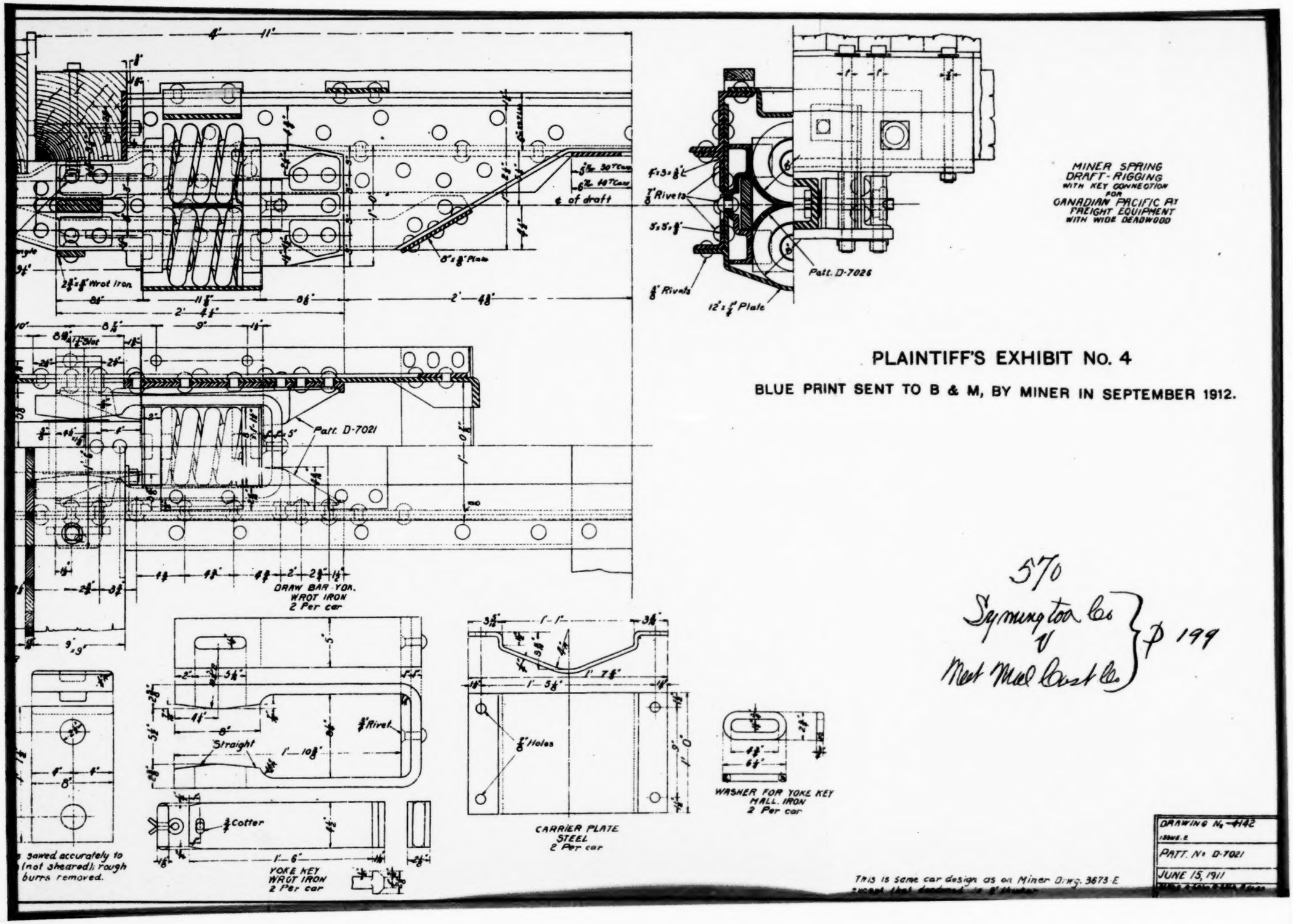

PLAINTIFF'S EXHIBIT No. 4

BLUE PRINT SENT TO B & M, BY MINER IN SEPTEMBER 1912.

570
Symington Co
v
Nat Mal Cast Co
p 199

BLUE PRINT ATTACHED TO PLAINTIFF'S INTERROGATORIES

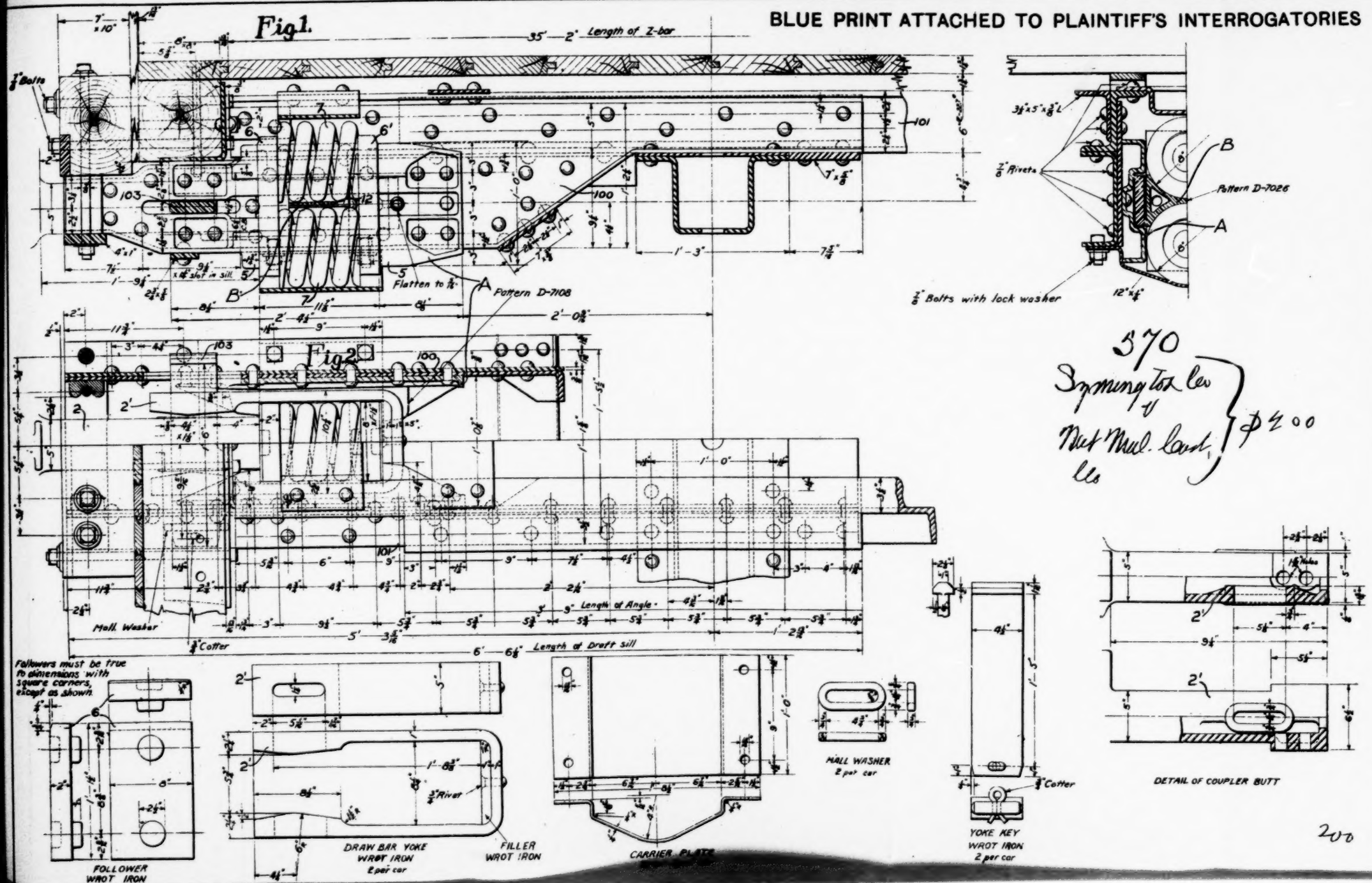

570
Symington Co
v
Nat Mal. Cast. Co
$400

200

201 PLAINTIFF'S EXHIBIT No. 11.

Correspondence Between Byers and The National Malleable Castings Company.

CAMERON, Mo., 12–5–99.

National Malleable Castings Co.

GENTLEMEN: I wish to call your attention to a Device that is up to date which I will sell at a very low figure, as I am not financially fixed to handle it. It is a car draft rigging. It is simple, durable and cheap, for single or double draft spring. Does away with wro't & cast iron. Mall. iron or cast steel takes its place. If you are interested in any thing of that kind, I have a working model of my device which I would like for you to see. Pl-s- let me know when I may see the proper party at your Chicago office. I am familiar with most all kind of appliances in this line. My aim is to dispose of my devices to the first party that offers me a fair price for my trouble and expense.

Yours for business,

J. J. BYERS,
Lock Box 482, *Cameron, Mo.*

CHICAGO, December 7, 1899.

Mr. J. J. Byers, Lock Box 482, Cameron, Missouri.

DEAR SIR: We have your letter of the 5th, with reference to a draft rigging device which you have designed. We would be glad to have you send the model of this device to us so that we may examine it, and if you have procured a patent on same, send us a copy of the patent, or give us the patent number, if you
202 haven't a copy to spare, and we can obtain one from the Patent Office. If, after we have inspected your model, we are interested in your design, we can then arrange to have you see us.

Very truly yours,

C. MARK.

CAMERON, Mo., 12–9–99.

The National Malleable Castings Co.

GENTLEMEN: Yours of the 7th at hand. Will say I would rather bring the model to you as I can explain the merits better than I can write them. I have no doubt you would readily see some of the good points, but still you might overlook some of them. I expect to be in your city in the latter part of next week, and if you will kindly advise some day that will be convenient, I would then be pleased to see you with my model.

Awaiting your reply, I remain

Yours Truly,

J. J. BYERS,
Lock Box 482, *Cameron, Mo.*

Subject: Draft Rigging Device.

CHICAGO, December 11, 1899.

Mr. J. J. Byers, Lock Box 482, Cameron, Missouri.

DEAR SIR: We have your letter of the 9th, in which you say that you would rather bring the model of your draft rigging here, as you could explain its merits better than to write.

We have no objection, of course, to having you come here, and to talking with you about your device, but unless you have other business here, it hardly seems worth while for you to come
203 here at this time. If after we make a preliminary examination of your device, we are interested in following the matter up further, then it would be time enough for you to come here. However, you can suit yourself. We only write in this way to have you understand that it hardly seems worth while to us for you to go to any expense until after we have made a preliminary examination.

The writer expects to be away from home the latter part of this week, but will be at home next week.

Very truly yours,

THE NATIONAL MALLEABLE CASTINGS COMPANY.
C. MARK.

CAMERON, Mo., December 17, 1899.

The National Malleable Castings Co.

I have your letter of the 11th. I send you to-day a model of my draft rigging device. It is cheaply gotten up but the idea and outline is there. The parts painted gray is intended to be cast of malleable iron or cast steel. Of course the castings is to be lightened up by taking out material where it is not needed, and the outline maintained. I will simply mention a few of the most important features about this device and these are that this device is durable simple and cheaper, or at least as cheap as any other device in use doing the same work. It is simple because the followers and springs can be changed just by removing the two split keys and prying up and knocking out the slide underneath the pocket without disturbing any other part of this can be done in from 5 to 10 minutes where in other devices it would take from 1 to 3 or 4 hours, as the D Bar carrier iron and follower straps would all have to be taken down and generally there is some bolts to replace on account of breaking them in trying to turn or cut the nuts off. The D Bar and Yoke is gotten at just simply by removing the cross key, and again you will see the pocket is so arranged so it will fit in the ordinary space between the draft timbers and sills and allow the use of two sets of draft springs with only two followers. You
204 will note furthermore that it is substantial and safe. Should the followers, springs or yoke break, the D Bar would then pull direct by the cross key and the pocket itself, as the cross key will be very strong when attached to this device, it being the American key which is now used for the Am. con. rigging, but as

you see, the yoke connects up against the D Bar where with the Am. rods the rod connects 7 or 8 from the D Bar. This you see makes a great difference in the strain on this key. I think from this you will be in a position to see into the device and appreciate its merits; there are many other good points I will not take time to write. I expect to be in your city the latter part of this week. I will then call on you. Since I first corresponded with you, I have a fairly good offer, but I am not only after the money I may get out of it, but want to see the device go into extensive use as well. This model represents one half size.

Yours very truly,
(Signed) J. J. BYERS,
Lock Box 482, *Cameron, Mo.*

Rec'd Dec. 27, 1899.
Ack'd 1/1/1900.
Ent'd.

CAMERON, Mo., 12–26–99.

The National Malleable Castings Co.

I have made a drawing which I herewith inclose showing a way of riveting on the yoke by using the cross key as a rivet which I think will be better than the two 1¼″ rivets now used. I think it makes it a great deal stronger and if riveted properly will not work loose. This method could be used on furniture cars where the draft rigging is attached direct to the sills and where the *ensill* does not admit of the arm cross key, and also to parties that does not wish to apply the key in the old way. You no doubt
205 understand the dimension of the followers and pocket, but as you have no blueprints or specifications, there is a chance for mistakes. The followers should be 2″ thick, 6½″ wide, 13⅜″ long, 6½″ for each spring and a ⅜ space between the springs. The space in the pocket for the springs and followers should be 12″ long, 7¼″ wide and 13¾″ between inside surface and top of slide in bottom of pocket after the slide is in place. The pocket should be 10½″ wide outside measure and 9½″ inside measure. The yoke should be made according to drawing next attached, have ⅜″ *clearens* on each side of yoke. The bolt holes and the lugs on the side of the pocket should be as shown on the model and the bolt holes should be large enough to receive a 1″ bolt and countersunk 1″ so bolt heads will clear inside surface in pocket in good shape. These figures and drawings I think will fix you up all O. K.

Trusting that the device will prove satisfactory. If there is anything your men do not thoroughly understand kindly let me know and I will try to make it clear.

Yours very truly,

J. J. BYERS,
Box 482, *Cameron, Mo.*

Sketch on Page 2, Byers' Letter, Dec. 26, '99.

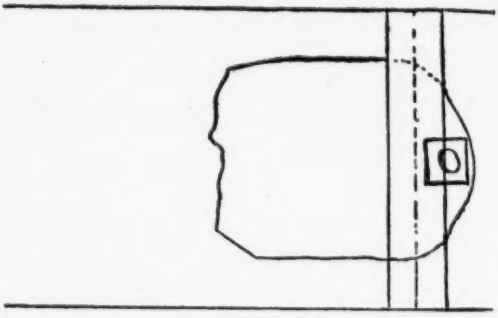

2

(Here follows diagram, marked p. 206.)

761

SKETCHES ON PAGE 3, BYERS' LETTER, DEC. 26, '99.

762

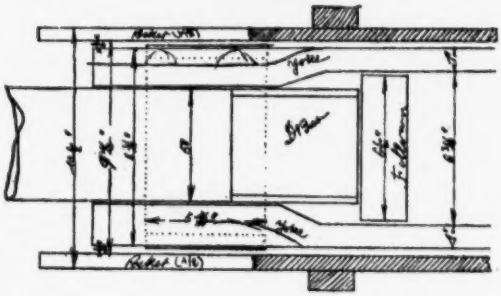

763

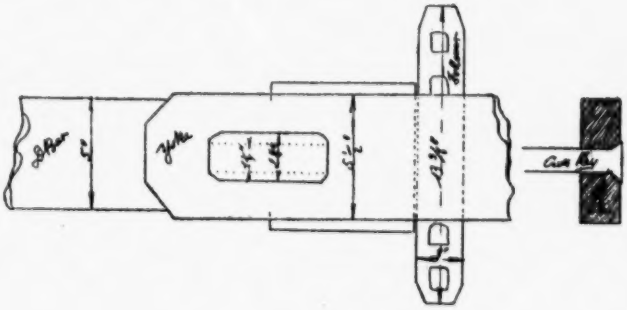

764

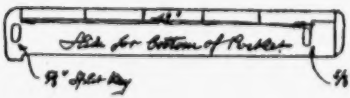

570

Symington Co
vs
Nat Mal. Cast. Co.

} P 206

207 PLAINTIFF'S EXHIBIT No. 13½.

Letter Recommending McGill.

(2934.)

(Burlington Route.)

Chicago, Burlington & Quincy Railway Company, Lines East of the Missouri River, Office of Division Superintendent.

BROOKFIELD, Mo., Dec. 20, 1907.

To Whom Presented:

The bearer, Mr. J. F. McGill, entered the service of this Company as brakeman March 19, 1890, was promoted to conductor November 1, 1894, and was appointed Day Yardmaster at Cameron Junction August 1, 1895, at which place he worked until November 30, 1907, when he resigned on his own accord. His services were first class.

(Signed) W. F. THIEHOFF,
Ass't Superintendent.

G. M.–R.
(Stamped.)
C. B. & Q. Ry. Co., Dec. 20, 1907.
Trainmaster's Office, Brookfield.

(Here follows diagram marked page 208.)

Plaintiff's Exhibit No. 14. White Sketch.
Byers' Second Model.

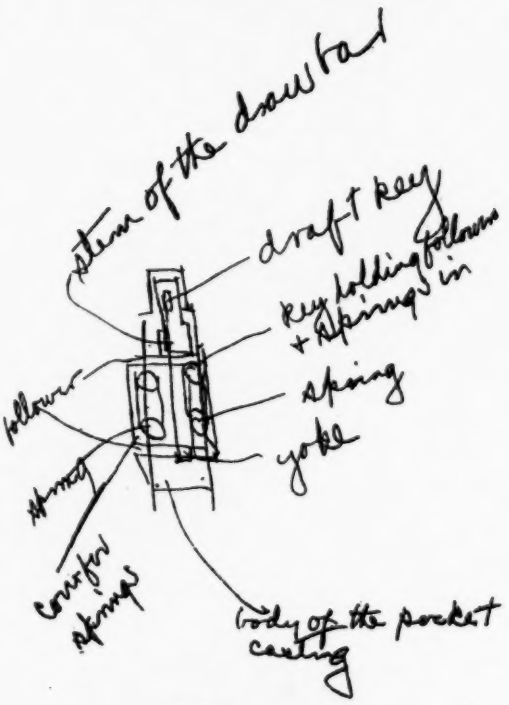

570
Symington Co.
v
Nat Mal Steel Co.
} D 208

209 BYERS & NATIONAL MALLEABLE CASTINGS CO.
vs.
SYMINGTON COMPANY.

PLAINTIFF'S EXHIBIT No. 16.

History of Byers Patent.

2–390.

UNITED STATES OF AMERICA,
DEPARTMENT OF THE INTERIOR,
UNITED STATES PATENT OFFICE.

To all to whom these presents shall come, Greeting:

This is to certify that the annexed is a true copy from the Records of this Office of the File Wrapper, Contents and Drawings in the matter of the Letters Patent of Jacob J. Byers, Assignor of One-half to The National Malleable Castings Company, Number 673,419, Granted May 7, 1901, for Improvement in Draft Riggings.

In testimony whereof I have hereunto set my hand and caused the seal of the Patent Office to be affixed at the City of Washington, this 26th day of December, in the year of our Lord one thousand nine hundred and fourteen and of the Independence of the United States of America the one hundred and thirty-ninth.

[SEAL.] J. T. NEWTON,
Acting Commissioner of Patents.

Ten cent Documentary Stamp cancelled.

210 2–437.

Div. 34.

Number (Series of 1900).

13,744.

Div. 34.

1900.

Ex'r's Book, 106. 735.

Patent No. 673,419.

Name Jacob J. Byers, Assor of ½ to The National Malleable Castings Company, of Cleveland, O. (Corp. of O.).

Of Cameron,
County of ——,
State of Missouri,
Invention Draft-Rigging.

Division of App., No. —, filed ——, 190–.
Parts of Application filed.

	Original.	Renewed.
Petition	Apr. 21, 1900	, 190
Affidavit	" ", 190"	, 190
Specification	" ", 190"	, 190
Drawing 4 shts.,	" ", 190"	, 190
Model None	, 190	, 190
Specimen ——.		
First Fee Cash $15,	Apr. 21, 1900	, 190
" " Cert.	, 190	, 190
Appl' filed complete	Apl. 21, 1900	, 190

April 13, 1901.

Examined Oct. 25/00 G. R. Simpson, , 190
Countersigned: J. W. Babson, , 190
For Commissioner. For Commissioner
Notice of Allowance October 26, 1900. , 190
Final Fee Cash $20 Apr. 13, 1901. , 190
" " Cert. , 190 . , 190

Patented May 7 , 1901.

Attorney- BAKEWELL & BAKEWELL,
Pittsburg-, Pa.

—— ——,
Associate Attorney.

Address, ——. Address, ——.

Patent No. 673,419, Date of Patent May —, ——.

211 Amount Received $15.00, c'k. ——, Chief Clerk.

PITTSBURG-, PA., April 20, 1900.

The Commissioner of Patents.

SIR: We send herewith an application of Jacob J. Byers for a patent for an improvement in Draft Riggings, together with 4 sheets of drawing, and fifteen dollars, the government fee due thereon.

Very respectfully,

BAKEWELL & BAKEWELL.

[Endorsed:] U. S. Patent Office. Apr. 21, 1900. —— ——, Chief Clerk.

To the Commissioner of Patents:

The Petition of Jacob J. Byers, of Cameron, Clinton County, Missouri, whose post office address is P. O. Box 482, Cameron, aforesaid, respectfully represents,

That your petitioner, having invented a new and useful improvement in Draft Riggings described and claimed in the annexed specification, prays that Letters Patent of the United States may be granted therefor, vesting in your petitioner and in your petitioners legal representatives the exclusive right to the same upon the terms and conditions expressed in the Act of Congress in that case made and provided; and that William Bakewell and Thomas W. Bakewell, constituting the firm of Bakewell & Bakewell, of the City of Pittsburg-, Pa., may be recognized as your petitioner's Attorneys in the matter of this application for a Patent, hereby authorizing them, or their accredited agent, to transact all business with the Patent Office relative thereto to sign the drawings, to alter and amend the specification,
to withdraw the application, or to appeal in case of rejection,
212 as they may deem advisable; to receive the Patent when
granted, and generally to do all matters and things needful in the premises, as fully, and to all intents and purposes, as your petitioner could do.

JACOB J. BYERS.

U. S. B. B. Revenue Stamp, 4/20/1900 25 Cents.

Specification.

To all whom it may concern:

Be it known that I Jacob J. Byers, of Cameron, in the County of Clinton and State of Missouri, have invented a new and useful improvement in Draft-Riggings, of which the following is a full, clear and exact description, reference being had to the accompanying drawings, forming part of this specification, in which

Figure 1 is a side elevation, showing the upper part of the figure in central longitudinal section; Figure 2 is a sectional plan view on the lines II–II and II^a–II^a of Fig. 1; Figure 3 is an end view, the left hand portion of which is in vertical section on the line III–III, and the remainder in vertical section on the line III^a–III^a; Figure 4 is an elevation of the inner side of the follower; Figure 5 is a side view of the follower; Figure 6 is a side elevation of a modified construction; Figure 7 is a bottom plan view of Fig. 6, partly in section and showing the bottom plate removed; Figure 8 is an end elevation, showing the drawbar shank in section; Figure 9 is an end view of the stop; Figure 10 is a top plan view of a modified construction, showing the draft arms integral with the part of the rigging which contains the springs; Figure 11 is a side elevation of Fig. 10; Figure 12 is a cross-section on the line XII–XII of Fig. 10.

In Figs. 1, 2 and 3, 2 represents the shank of a drawbar, and 3 represents a pocket which contains the springs of the draft-rigging,

and is set between draft-timbers (not shown) to which it is affixed by bolts 4, 4. The pocket may be cast in a single piece, and
213 is provided with horizontal lugs 5, 5, which extend across the pocket, above and below, and constitute abutments for the followers 6, 6′, which are set in the pocket. The pocket and lugs are suitably braced by metal ribs or flanges, as shown. 7, 7′, are the springs placed preferably one above the other between the followers, and to hold them in place, as well as to limit the approach of the followers. I may provide the latter with projecting stops 8, which extend from such followers between the springs. The drawbar-shank 2 is connected with the rear-follower 6′ by a yoke 2′, which is fixed to the drawbar by riveting or otherwise, and extends within

between the lugs and

Oct. 2, '00. the pocket ∧ around the rear-follower as shown.

The pocket is open at the bottom so that the follower plates and springs may be removed freely from within the yoke in a vertical direction without the necessity of disengaging the yoke from the drawbar, since the follower-plates are not connected with the drawbar otherwise than by being placed between the sides of the yoke. This removal is made possible by taking off a cap-plate 9, which closes the opening at the bottom of the pocket and is secured by bolts 9^a, and the follower-plates can then be pried out by means of a tool applied to toothed recesses 10 formed in the edges of the follower-plates. To facilitate the insertion of the follower-plates and springs, I prefer to bevel the ends of the follower plates, as shown at *b*, *b*.

The pocket is preferably made alike at both ends, as shown in figures 1-3, with an opening *c* at each end for the passage of the drawbar-shank, so that it is reversible, and can be turned in either direction. In the figures on the second sheet of the drawings, I show modifications of my invention, in which the drawbar-shank is attached to the yoke 2′ by a rivet-key 11, which may be passed through the transverse slot ordinarily formed in drawbars for the attachment of the so-called American continuous draft-rods, and through slots in the arms of the yoke, and is upset at the ends, as shown. In these figures, also, I show a stop-piece 12, made separate from the follower
214 plates and interposed between the springs, performing the same function as is performed by the projections from the follower-plates shown in Figs. 1 and 4.

In Figs. 10-12, on the third and fourth sheets of the drawings, I show my improvement applied to use with the American continuous system, in which the drawbars at the opposite ends of the car are connected by transverse keys and longitudinal rods, and to this construction I intend to make specific claim, in addition to my generic claims. In these figures I show the rigging provided with metal draft-arms 13, which may be cast integrally with each other and with the pocket above described, and which are abutted against the ends of the draft-timbers 14, of which they form a continuation, and to which they are secured by bolts 15. The draft-arms are also secured to the sills above by bolts 16, and may be connected at the top and bottom as well as at the rear by integral webs or plates, it being necessary only to leave an opening at the bottom through which the springs and fol-

lowers may be removed, and to close said opening by a removable plate or cap 9′. The drawbar is connected to the arms of the yoke by a key 17, which extends through the usual slot in the drawbar, through slots in the arms of the yoke which are preferably doubled so as to give a better bearing for the key, and through slots in the draft-arms, and is adapted to be connected with the draft-rods 19 of the continuous system. In addition to the stop 12, which I show in these figures, I also show as an alternate construction, stops 18, either hollow or solid, which may be set axially in the springs between the follower-plates. The draft-arms shown in these figures are preferably strengthened by flanges at the sides, and constitute a strong and very desirable construction.

The advantages of my invention will be appreciated by those skilled in the art. The springs arranged one above the other, the pocket having horizontal lugs or abutments for the followers, the free removability of the springs and the followers from below from between the arms of the yoke and from the pocket, and the construction of the draft-arms shown in Fig 10, together with the other items mentioned in the claims, constitute, severally and in combination, important parts of my invention:

I claim:—

Erased July 25, 1900.

---

1. A draft rigging having springs arranged vertically, one above the other; substantially as described.

[Matter enclosed between rules erased in copy.]

Substitute A. July 26, 1900.

---

2. A draft rigging having in combination with the drawbar, a yoke, the arms of which are connected to the sides of the drawbar, and springs arranged one above the other within the yoke; substantially as described.

[Matter enclosed between rules erased in copy.]

Substitute A¹, July 26, 1900.

---

3. A draft rigging having springs arranged one above the other, and followers adapted to fit against the ends of both springs; substantially as described.

[Matter enclosed between rules erased in copy.]

Substitute B, Oct "2," 1900.

3 [4].* A draft rigging having a pocket, and lugs extending horizontally across the pocket ∧ and adapted to receive the followers; substantially as described.
(at the upper and lower portions thereof respectively)
July 26, '00.

4 [5].* A draft rigging having a pocket, and lugs running horizontally across the pocket ∧ and adapted to receive the followers, and braces connected with the lugs and the pocket; substantially as described.
(at the upper and lower portions thereof respectively)

[Matter enclosed between rules erased in copy.]

Erased Oct. 2, '00.

5 [6].* A draft rigging having in combination with the drawbar and spring mechanism, a yoke, the arms of which are connected to the sides of the drawbar, and a key extending horizontally through drawbar and connecting the same to the yoke; substantially as described.

6 [7].* A draft rigging having springs arranged vertically, one above the other, followers adapted to fit against the ends of both springs, and a pocket having horizontally extending lugs ∧ adapted to receive the followers; substantially as described.
(situated one above the other, and)
July 26, 1900.

[Matter enclosed between rules erased in copy.]

Substitute B¹, Oct. 2, '00.

7 [8].* A draft rigging having a yoke open at the bottom and having ∧ spring mechanism arranged [therein],* and a pocket within which the yoke extends and which is also open at the bottom to permit removal of the ∧ [spring mechanism];* substantially as described.
(springs and followers arranged between the arms of the yoke)
" " 216
(springs and followers independently of the drawbar)

8 [9].* A draft-rigging having a yoke open at the bottom and having ∧ [spring mechanism arranged therein],* a pocket which contains the yoke and is also open at the bottom to permit removal of the ∧ [spring mechanism],* and a detachable closure [for the opening in the pocket; substantially as described.]*
(springs and followers arranged between the arms of the yoke)
" "
(springs and followers)

[Matter enclosed between rules erased in copy.]
[* Words and figures enclosed in brackets erased in copy.]

9, 7 [10].* A draft rigging having, in combination with the drawbar and spring mechanism, a yoke the arms of which are connected to the sides of the drawbar, a pocket within which the yoke extends, and a key which extends horizontally through the drawbar and yoke, and through slots in the walls of the pocket; substantially as described.

Erased July 26, '00.

---

11. A draft rigging having a drawbar, a pocket, open at the bottom, a spring in the pocket, followers, and a key extending through the drawbar and pocket and adapted to receive continuous rods at its ends; substantially as described.

[Matter enclosed between rules erased in copy.]

10, 8 [12].* A draft rigging having springs set one above the other, and a follower engaging the ends of both springs and having at the middle a stop-projection which separates the springs; substantially as described.

Cancelled Oct. 2, '00.

---

11 [13].* A draft rigging follower provided at the edge with a series of notches or shoulders to facilitate prying of the follower; substantially as described.

12 [14].* A draft rigging having lugs against which the followers bear, and a follower beveled at the end to facilitate assembling of the follower and spring; substantially as described.

[Matter enclosed between rules erased in copy.]

9 [13, 15].* A draft rigging having springs set vertically one above the other, and a single pocket having at opposite ends horizontal

July 26, '00. 217 lugs ^ at the top and bottom of the pockets, [and]* followers in the pocket set between the lugs, and adapted to receive a

Oct. 2, 1900. spring between them; ^ and a yoke which extends within the pockets between the lugs substantially as described.

10 [14, 16].* A draft rigging having springs arranged vertically, one above the other, followers, a yoke between the sides of which the springs and followers are set, said springs and followers being re-

" " movable vertically from below ^ ; independently of the drawbar substantially as described.

In Testimony Whereof, I have hereunto set my hand, April 6, 1900.

JACOB J. BYERS.

Witnesses:
WILL H. BROWN.
JOHN A. LIVINGSTONE.

[* Words and figures enclosed in brackets erased in copy.]

ranged one above the other between the arms of the yoke, and followers adapted to fit against the ends of both springs, and also contained between the ends of the yoke, said springs and followers being removable from below independently of the draw-bar; substantially as described.

√*Claim 4, line 2,* after *"pocket" insert:* AT THE UPPER √AND LOWER PORTIONS THEREOF RESPECTIVELY

√*Claim 5, line 2, after "pocket"* insert AT THE UPPER √AND LOWER PORTIONS THEREOF RESPECTIVELY

√*Claim 7, line 4, after "lugs"* insert SITUATED ONE √ABOVE THE OTHER AND

√*Claim 8, line 2, cancel "spring mechanism arranged √therein"* and insert: SPRINGS AND FOLLOWERS ARRANGED √BETWEEN THE ARMS OF THE YOKE

222 √*Claim 8, line 4, cancel "spring mechanism" and in-√sert:* SPRINGS AND FOLLOWERS INDEPENDENTLY OF THE √DRAWBAR

√*Claim 15, line 3, after "lugs"* insert: AT THE TOP √AND BOTTOM OF THE POCKETS

√*Claim 9, line 2, cancel "spring mechanism arranged √therein"* and insert: SPRINGS AND FOLLOWERS ARRANGED √BETWEEN THE ARMS OF THE YOKE

√*Claim 9, line 4, cancel "spring mechanism" and √insert:* SPRINGS AND FOLLOWERS

√*Cancel claim 11.*

√*Claim 16, line 4, after* "below" insert: √INDEPENDENTLY OF THE DRAWBAR.

Remarks.

We respectfully ask a reconsideration of claims 4, 5 and 15. The horizontal lugs above and below (see applicant's specification, page 1, line 29) are not seen in the references.

As to claim 6, the key is not shown in Pilcher. Pilcher uses a rivet.

Claim 13. The part shown in Case patent is a cylindrical piece and the cavities are mere lightening cavities.

The other claims seem to be clearly distinguished.

Very respectfully,

BAKEWELL & BAKEWELL,
Applicant's Attorneys.

[Endorsed:] Serial No. 13,744. Paper No. 2. Amendment A. Filed July 25, 1900. J. J. Byers. United States, Jul- 26, 1900, Patent Office. U. S. Patent Office, Jul- 27, 1900, Division XXXIV.

223 2–260.

Room 98.

Address only "The Commissioner of Patents, Washington, D. C."

Paper No. 3.

All communications respecting this application should give the serial number, date of filing, and title of invention.

W. F. F. DEPARTMENT OF THE INTERIOR, E. P. H.
UNITED STATES PATENT OFFICE,
WASHINGTON, D. C., Aug. 7, 1900.

Jacob J. Byers, care Bakewell & Bakewell, Pittsburg, Pa.:

Please find below a communication from the Examiner in charge of your application for Draft Rigging, filed Apr. 21, 1900. Serial No. 13,744.

C. H. DUELL,
Commissioner of Patents.

Claims 3 and 4 are rejected on patent No. 554,900, Tribe, Feb. 18, 1896 (Couplings, Sliding Detents.)
Claims 5 and 6 are again rejected on patent No. 616,965.
Claims 11 and 12 stand rejected on the references and for the reasons of record.
Claim 13 is rejected upon No. 616,965, of record, together with patent No. 640,327, Schaffer, Jan. 2, 1900 (Trucks, Bolsters, Cast).
The remaining claims seem to be allowable.

G. R. SIMPSON,
Examiner, Div. 34.

W. F. F.

[Endorsed:] Serial No. 13,744. Paper No. 3. Rejection. Dated Aug. 7, 1900. J. J. Byers.

224 Room 98.

Application of J. J. Byers. "Draft-Riggings." No. 13,774. Filed April 21, 1900.

PITTSBURG, PA., Sept. 29, 1900.

The Commissioner of Patents.

SIR: We desire to amend as follows:—
√*Page 2, line 9, after "pocket"* INSERT: BETWEEN THE √LUGS AND
√Cancel claims 3 and 4, and insert:

B. 3. A draft-rigging having a pocket, lugs extending horizontally across the pocke tat the upper and lower portions

April 4, 1901. thereof respectively, followers ∧ within the pocket [between the pockets]* which bear against the lugs, and a yoke which extends within the pocket between the lugs and around the rear follower; substantially as described.

4. A draft-rigging having a pocket, lugs extending horizontally across the pocket at the upper and lower portions thereof

" " respectively, followers ∧ within the pocket [between the pockets]* which bear against the lugs, a yoke which extends within the pocket between the lugs and around the rear follower, and braces connected with the lugs and pocket; substantially as described.

√Cancel claims 5 and 6.

√In *claims 7 and 8, the plural* "springs" *was inadvertently employed. To correct this we amend as follows:—*

√Cancel claims 7 and 8, and insert:—

B¹. 5. A draft-rigging having a yoke open at the bottom and having a spring and followers arranged between the arms of the yoke, and a pocket within which the yoke extends 225 and which is also open at the bottom to permit removal of the spring and followers independently of the draw-bar; substantially as described.

Oct. 17, 1900. 6. A draft-rigging having a yoke ∧ open at the bottom and having a spring and followers arranged between the arms of the yoke, a pocket which contains the yoke and is also open at the bottom to permit removal of the spring and followers, and a detachable closure for the opening in the pocket; substantially as described.

√*Cancel* claims *11 and 12.*

√*Claim 13, line 4,* after "them" insert: AND A YOKE WHICH EXTENDS WITHIN THE POCKET BETWEEN THE LUGS

√Claim 13, line 3, before "followers" cancel "and"

Very respectfully,

BAKEWELL & BAKEWELL,
Applicant's Attorneys.

[Endorsed:] Serial No. 13,744. Paper No. 4. Amendment B. Filed Oct. 2—1900. J. J. Byers. United States, Oct. 2, 1900, Patent Office. U. S. Patent Office, Oct. 2, 1900, Chief Clerk. U. S. Patent Office, Oct. 3, 1900, Division XXXIV.

[* Words and figures enclosed in brackets erased in copy.]

226 2–260.

Paper No. 5.

All communications respecting this application should give the serial number, date of filing, and title of invention.

Room 98.

Address only "The Commissioner of Patents, Washington, D. C."

W. F. F. DEPARTMENT OF THE INTERIOR, E. P. H.
UNITED STATES PATENT OFFICE,
WASHINGTON, D. C., Oct. 15, 1900.

Jacob J. Byers, care Bakewell & Bakewell, Pittsburg, Pa.:

Please find below a communication from the Examiner in charge of your application for Draft Rigging, filed Apr. 21, 1900. Serial No. 13,744.

C. H. DUELL,
Commissioner of Patents.

The first line of claim 6, appears to be inaccurate. Otherwise, the claims are thought to be allowable.

G. R. SIMPSON,
Examiner, Div. 34.

W. F. F.

[Endorsed:] Serial No. 13,744. Paper No. 5. Office Letter. Dated Oct. 15—1900. J. J. Byers.

227 Room 98.

Application of J. J. Byers. "Draft Rigging." Filed April 24, 1900. Serial No. 13,774.

PITTSBURG, PA., October 16, 1900.

The Commissioner of Patents.

SIR: We desire to amend as follows:—

√*Claim 6, line 1,* after *"yoke" insert:* OPEN.

Remarks.

The foregoing amendment corrects the omission to which the Examiner called attention, and favorable action is requested.

Very respectfully,

BAKEWELL & BAKEWELL,
Applicant's Attorneys.

[Endorsed:] Serial No. 13,744. Paper No. 6. Amendment. Filed Oct. 17—1900. J. J. Byers. U. S. Patent Office, Oct. 17, 1900, Chief Clerk. U. S. Patent Office, Oct. 18, 1900, Division XXXIV. United States, Oct. 17, 1900, Patent Office.

228 Serial No. 13,744.

DEPARTMENT OF THE INTERIOR,
U. S. PATENT OFFICE,
WASHINGTON, D. C., Oct. 26, 1900.

Jacob J. Byers, Asso'r, c/o Bakewell & Bakewell, Pittsburg, Pa.

SIR: Your application for a patent for an improvement in Draft Rigging Filed Ap'l 21, 1900, has been examined and allowed.

The final fee, Twenty Dollars, must be paid, and the Letters Patent bear date as of a day not later than six months from the time of this present notice of allowance.

If the final fee is not paid within that period the patent will be withheld, and your only relief will be by a renewal of the application, with additional fees, under the provisions of Section 4897, Revised Statutes. The Office aims to deliver patents upon the day of their date, and on which their term begins to run; but to do this properly applicants will be expected to pay their final fees at least Twenty Days prior to the conclusion of the six months allowed them by law. The printing, photolithographing and engrossing of the several patent parts, preparatory to final signing and sealing, will consume the intervening time, and such work will not be done until after payment of the necessary fees.

When you send the final fee you will also send, distinctly and plainly written, the name of the inventor and title of invention as above given, date of allowance (which is the date of this circular), date of filing, and, if assigned, the names of the assignees.

If you desire to have the patent issue to assignees, an assignment containing a request to that effect, together with the fee for
229 recording the same, must be filed in this Office on or before the date of payment of the final fee.

Additional copies of Specifications and Drawings will be charged for at the following rates: Single Copies, uncertified, 5 cents each. The money should accompany the order.

Very respectfully,

C. H. DUELL,
Commissioner of Patents.

After allowance, and prior to payment of the final fee, applicants should carefully scrutinize the description to see that their statements and language are correct, as mistakes not incurred through the fault of the office, and not affording legal grounds for reissues, will not be corrected after delivery of the letters patent to the patentee or his agent.

[Printed diagonally across page:] In remitting the final fee give the Serial Number at the head of this notice.

[Printed on right hand margin:] If payment is made by check or draft, the credit allowed is subject to the collection of the same.

[Printed on left hand margin:] The within title is that given by the Examiner in charge as most appropriate to your invention. Should you desire a change in the same, satisfactory reasons must be given therefor on or before the payment of the final fee.

230 2–073.

DEPARTMENT OF THE INTERIOR,
UNITED STATES PATENT OFFICE,
WASHINGTON, D. C., Ap'l 4, 1901.

Petition.

Application of Jacob J. Byers. Serial No. 13,744. Invention: Draft-Rigging.

This petition is referred to the Examiner in charge of Division 34 for recommendation. In case he recommends adversely he will state his reasons therefor.

C. H. DUELL,
Commissioner of Patents.

231 Room 98.

Application of J. J. Byers. Draft Riggings. Filed Jan. 2, 1900. Ser. No. 13,774.

PITTSBURG, PA., April 3, 1901.

The Commissioner of Patents.

SIR: We desire to amend as follows:—

√*Claim 1, line 4,* change "arm" to: ARMS.

√*Claim 3,* line 3, *change "between* the *pockets" to:* √WITHIN THE POCKET.

√*Claim 4, line 3,* change *"between the pockets" to:* √WITHIN THE POCKET.

As this amendment does not affect the merits of the application, we respectfully request that it be entered without withdrawal of the case from issue.

Very respectfully,

BAKEWELL & BAKEWELL,
Applicant's Attorneys.

[Endorsed:] Serial No. 13,744. Paper No. 7. Amendment. Filed Apr. 4—1901. J. J. Byers. The entry of this amendment is recommended under the provisions of Rule 78, Rules of Practice, without withdrawing the case from issue. The final fee has not been paid. Respectfully Submitted G. R. Simpson, Ex'r, Div. 34. Ap'l 4, 1901. Approved Apr. 5, 1901, F. I. Allen, Commissioner. U. S. Patent Apr. 4, 1901, Office, U. S. Patent Office, Apr. 4, 1901, Division XXXIV. Mail Room, Apr. 4, 1901, U. S. Patent Office.

232 *Letter No.* —.

J. D. C.

Adddess only The Commissioner of Patents, Washington, D. C.

DEPARTMENT OF THE INTERIOR,
UNITED STATES PATENT OFFICE,
WASHINGTON, D. C., April 5, 1901.

In the Matter of the Application of Jacob J. Byers. Draft-Rigging. Filed April 21, 1900. Serial No. 13,744.

Amendment.

SIR: You are hereby informed that the recommendation of the examiner that the amendment be admitted has been approved by the Commissioner.

By direction of the Commissioner.

Very respectfully,

E. V. SHEPARD,
Chief Clerk.

F.

Jacob J. Byers, c/o Bakewell and Bakewell, Pittsburg, Pa.

[Endorsed:] Serial No. 13,744. Paper No. 8. Notice of Com'r's Decision. Dated Ap'l 5, 1901. Jacob J. Byers.

233 2–327.

Amount Received, $20, C'k. Chief Clerk.

Memorandum of Fee Paid at United States Patent Office.

Serial No. 13,744, —— —, 191–.

Inventor:
Jacob J. Byers.

Patent to be issued to
Jacob J. Byers and The National Malleable Castings Co.

Name of invention, as allowed:
Draft Riggings.

Date of payment:
—— —, ——.

Fee:
Final fee $20.

Date of filing:
—— —, ——.

Date of circular of allowance:
October 26, 1900.

BAKEWELL & BAKEWELL, *Solicitors.*

Send Patent to Bakewell & Bakewell, Pittsburg, Pa.

[Endorsed:] Mail Room, Apr. 13, 1901, U. S. Patent Office.

234 2–183.

Serial No. 13,744.

Issue and Gazette Division.

All communications should be addressed to "The Commissioner of Patents, Washington, D. C."

DEPARTMENT OF THE INTERIOR,
UNITED STATES PATENT OFFICE,
WASHINGTON, D. C., April 13, 1901.

Jacob J. Byers, Ass'or, c/o Bakewell & Bakewell, Pittsburg, Pa.

SIR: Your application for a patent for an improvement in Draft Riggings filed April 21, 1900, has been examined and again allowed. The final fee, Twenty Dollars, in the above-entitled case was received April 13, 1901.

Very respectfully, F. I. ALLEN,
Commissioner of Patents.

235 United States Patent Office.

Jacob J. Byers, of Cameron, Missouri, Assignor of One-half to the National Malleable Castings Company, of Cleveland, Ohio.

Draft-rigging.

Specification Forming Part of Letters Patent No. 673,419, *Dated May* 7, 1901.

Application Filed April 21, 1900. Serial No. 13,744 (No Model).

To all whom it may concern:

Be it known that I, Jacob J. Byers, of Cameron, in the county of Clinton and State of Missouri, have invented a new and useful Improvement in Draft-Riggings, of which the following is a full, true, and exact description, reference being had to the accompanying drawings, forming part of this specification, in which—

Figure 1 is a side elevation showing the upper part of the figure in central longitudinal section. Fig. 2 is a sectional plan view on the lines II II and II^a II^a of Fig. 1. Fig. 3 is an end view, the left-hand portion of which is in vertical section on the line III III and the remainder in vertical section on the line III^a III^a. Fig. 4 is an elevation of the inner side of the follower. Fig. 5 is a side view of the follower. Fig. 6 is a side elevation of a modified construction. Fig. 7 is a bottom plan view of Fig. 6, partly in section and showing the bottom plate removed. Fig. 8 is an end elevation showing the draw-bar shank in section. Fig. 9 is an end view of the stop. Fig. 10 is a top plan view of a modified construction, showing the draft-arms integral with the part of the rigging which contains the springs. Fig. 11 is a side elevation of Fig. 10. Fig. 12 is a cross-section on the line XII XII of Fig. 10.

In Figs. 1, 2, and 3, 2 represents the shank of a draw-bar,
236 and 3 represents a pocket which contains the springs of the draft-rigging and is set between draft-timbers, (not shown,) to which it is affixed by bolts 4 4. The pocket may be cast in a single piece and is provided with horizontal lugs 5 5, which extend across the pocket, above and below, and constitute abutments for the followers 6 6′, which are set in the pocket. The pocket and lugs are suitably braced by metal ribs or flanges, as shown. 7 7′ are the springs, placed, preferably, one above the other between the followers, and to hold them in place, as well as to limit the approach of the followers, I may provide the latter with projecting stops 8, which extend from such followers between the springs. The draw-bar shank 2 is connected with the rear follower 6′ by a yoke 2′, which is fixed to the draw-bar by riveting or otherwise and extends within the pocket, between the lugs and around the rear follower, as shown. The pocket is open at the bottom, so that the follower-plates and springs may be removed freely from within the yoke in a vertical direction without the necessity of disengaging the yoke from the draw-bar, since the follower-plates are not connected with the draw-bar otherwise than by being placed between the sides of the yoke. This removal is made possible by taking off a cap-plate 9, which closes the opening at the bottom of the pocket and is secured by bolts 9^a, and the follower-plates can then be pried out by means of a tool applied to toothed recesses 10, formed in the edges of the follower-plates. To facilitate the insertion of the follower-plates and springs, I prefer to bevel the ends of the follower-plates, as shown at *b b*. The pocket is preferably made alike at both ends, as shown in Figs. 1 to 3, with an opening *c* at each end for the passage of the draw-bar shank, so that it is reversible and can be turned in either direction.

In the figures on the second sheet of the drawings I show modifications of my invention, in which the draw-bar shank is attached to the yoke 2′ by a rivet-key 11, which may be passed through the transverse slot ordinarily formed in draw-bars for the attachment of the so-called "American" continuous draft-rods and through slots in the arms of the yoke and is upset at the ends, as shown. In these figures also I show a stop-piece 12, made separate from the follower-plates and interposed between the springs, performing the same function as is performed by the projections from the follower-plates shown in Figs. 1 and 4.

In Figs. 10 to 12, on the third and fourth sheets of the draw-
237 ings, I show my improvement applied to use with the American continuous system, in which the draw-bars at the opposite ends of the car are connected by transverse keys and longitudinal rods, and to this construction I intend to make specific claim in addition to my generic claims. In these figures I show the rigging provided with metal draft-arms 13, which may be cast integrally with each other and with the pocket above described and which are abutted against the ends of the draft-timbers 14, of which they form a continuation and to which they are secured by bolts 15. The draft-arms are also secured to the sills above by bolts 16 and may be connected at the top and bottom as well as at the rear by integral webs or plates,

it being necessary only to leave an opening at the bottom, through which the springs and followers may be removed; and to close said opening by a removable plate or cap 9'. The draw-bar is connected to the arms of the yoke by a key 17, which extends through the usual slot in the draw-bar, through slots in the arms of the yoke, which are preferably doubled, so as to give a better bearing for the key, and through slots in the draft-arms and is adapted to be connected with the draft-rods 19 of the continuous system. In addition to the stop 12 which I show in these figures I also show as an alternate construction stops 18, either hollow or solid, which may be set axially in the springs between the follower-plates. The draft-arms shown in these figures are preferably strengthened by flanges at the sides and constitute a strong and very desirable construction.

The advantages of my invention will be appreciated by those skilled in the art. The springs arranged one above the other, the pocket having horizontal lugs or abutments for the followers, the free removability of the springs and the followers from below from between the arms of the yoke and from the pocket, and the construction of the draft-arms shown in Fig. 10, together with the other items mentioned in the claims, constitute, severally and in combination, important parts of my invention.

I claim—

1. A draft-rigging having in combination with the draw-bar, a yoke, the arms of which are connected to the sides of the draw-bar, springs arranged one above the other within the yoke, and followers also arranged between the arms of the yoke, said springs and followers being removable from below, independently of the draw-bar; substantially as described.

238 2. A draft-rigging having a yoke, the arms of which are adapted to be connected to the sides of a draw-bar, springs arranged one above the other between the arms of the yoke, and followers adapted to fit against the ends of both springs, and also contained between the ends of the yoke, said springs and followers being removable from below independently of the draw-bar; substantially as described.

3. A draft-rigging having a pocket, lugs, extending horizontally across the pocket at the upper and lower portions thereof respectively, followers within the pocket which bear against the lugs, and a yoke which extends within the pocket between the lugs and around the rear follower; substantially as described.

4. A draft-rigging having a pocket, lugs extending horizontally across the pocket at the upper and lower portions thereof respectively, followers within the pocket which bear against the lugs, a yoke which extends within the pocket between the lugs and around the rear follower, and braces connected with the lugs and pocket; substantially as described.

5. A draft-rigging having a yoke open at the bottom and having a spring and followers arranged between the arms of the yoke, and a pocket within which the yoke extends and which is also open at the bottom to permit removal of the spring and followers independently of the draw-bar; substantially as described.

6. A draft-rigging having a yoke open at the bottom and having a spring and followers arranged between the arms of the yoke, a pocket which contains the yoke and is also open at the bottom to permit removal of the spring and followers, and a detachable closure for the opening in the pocket; substantially as described.

7. A draft-rigging having, in combination with the draw-bar and spring mechanism, a yoke the arms of which are connected to the sides of the draw-bar, a pocket within which the yoke extends, and a key which extends horizontally through the draw-bar and yoke, and through slots in the walls of the pocket; substantially as described.

8. A draft-rigging having springs set one above the other, and a follower engaging the ends of both springs and having at the middle a stop projection which separates the springs; substantially as described.

9. A draft-rigging having springs set vertically one above the other, and a single pocket having at opposite ends horizontal lugs at the top and bottom of the pockets, followers in the pocket set
239 between the lugs, and adapted to receive a spring between them; and a yoke which extends within the pocket between the lugs; substantially as described.

10. A draft-rigging having springs arranged vertically, one above the other, followers, a yoke between the sides of which the springs and followers are set, said springs and followers being removable vertically from below independently of the draw-bar; substantially as described.

In testimony whereof I have hereunto set my hand this 6th day of April, 1900.

JACOB J. BYERS.

Witnesses:
WILL H. BROWN.
JOHN A. LIVINGSTONE.

218. Railway Draft Appliances, Drawbars.

1900.

Contents.

½. Application, 1 paper[s]*. O. K.
1. Rejection, May 12, 1900.
2. Amendment A, July 25, 1900.
3. Rejection, Aug. 7, 1900.
4. Amendment B, Oct. 2, 1900.
5. Letter, Oct. 15, 1900.
6. Amendment, Oct. 17, 1900.
7. Amendment, Apr. 4, 1901.
8. Notice of Dec., Apr. 5, 1901.

Title: Improvement in Draft Rigging.

[Endorsed:] E. K. O. N.

[* Words and figures enclosed in brackets erased in copy.]

(Here follows calendar marked page 240.)

Plaintiff's Exhibit No. 18, 1915 Almanac.

READY-REFERENCE CALENDAR FOR 200 YEARS.

For ascertaining any Day of the Week for any given Time within Two Hundred Years from the introduction of the New Style, 1752, to 1952 inclusive.*

COMMON YEARS, 1752 TO 1951.												Jan. Oct.	Feb. Aug.	Mar. Nov.	Apr. May	June	July	Aug.	Sept. Dec.	Oct.	Nov.	Jan.
1751 1801	1757 1807	1763 1813	1769 1819	1775 1825	1846	1897 1903	1909 1914	1915 1921	1931 1937	1983 1943		4	7	7	3	5	1	3	6	2	4	7	2
1752 1802	1773 1813	1775 1819	1790 1830	1941	1947	1953 1958	1969 1975	1974 1986	1999 1997	1997 1951		5	1	1	4	6	2	4	7	3	5	1	3
1757 1803	1769 1814	1774 1825	1786 1831	1791 1843	1853	1910	1970 1981	1981	1987 1915	1993 1943		6	2	2	5	7	3	5	1	4	6	2	4
1754 1805	1765 1811	1771 1822	1782 1833	1793 1839	1799 1850 1901	1961 1967	1967 1915	1978 1926	1989 1933	1995 1941		7	3	3	6	1	4	6	2	5	7	3	5
1755 1810	1766 1877	1777 1833	1783 1834	1794 1845	1806 1851 1903	1963 1913	1973 1919	1979 1935	1999 1947	1947		1	4	4	7	2	5	7	3	6	1	4	6
1758 1809	1769 1815	1779 1826	1785 1837	1797 1845	1854 1905	1965 1911	1971 1933	1982 1938	1993 1935	1999 1933		2	5	5	1	3	6	1	4	7	2	5	7
1753 1810	1759 1821	1770 1837	1781 1838	1787 1849	1798 1855	1903	1917	1983	1921	1939 1945 1951		3	6	6	2	4	7	2	5	1	3	6	1

LEAP YEARS, 1760 TO 1943.												Jan. July	Feb. Aug.	Mar. Nov.	Apr. May	June	July	Aug.	Sept. Dec.	Oct.	Nov.	Jan.
1764	1760	1804	1832	1860	1888			1928				7	3	6	7	2	5	7	3	6	1	4	6
1788	1796	1808	1836	1864	1892	1904		1932				5	1	3	6	7	2	5	1	4	6	2	4
1772	...	1812	1840	1868	1896		1908					3	6	7	2	5	1	3	6	2	4	7	2
1776	...	1816	1844	1872	...		1912					1	4	5	1	3	6	1	4	7	2	5	7
1780	...	1820	1848	1876	...		1916					6	2	3	6	1	4	6	2	5	7	3	5
1784	1784	1824	1852	1880	...		1920					4	7	1	4	6	2	4	7	3	5	1	3
1788	1788	1828	1856	1884	...		1924					2	5	6	2	4	7	2	5	1	3	6	1

Note.—To ascertain any day of the week, first look in the table for the year required, and under the months are figures which refer to the corresponding figures at the head of the columns of days below. *For Example.*—To know on what day of the week July 4, 1915, will fall, look in the table of years for 1915, and in a parallel line under July is figure 4, which directs to column 4. In which it will be seen that July 4 falls on Sunday.

	1	2	3	4	5	6	7
	Monday	Tuesday	Wednesday	Thursday	Friday	SATURDAY	SUNDAY
	Tuesday	Wednesday	Thursday	Friday	SATURDAY	SUNDAY	Monday
	Wednesday	Thursday	Friday	SATURDAY	SUNDAY	Monday	Tuesday
	Thursday	Friday	SATURDAY	SUNDAY	Monday	Tuesday	Wednesday
	Friday	SATURDAY	SUNDAY	Monday	Tuesday	Wednesday	Thursday
	SATURDAY	SUNDAY	Monday	Tuesday	Wednesday	Thursday	Friday
	SUNDAY	Monday	Tuesday	Wednesday	Thursday	Friday	SATURDAY
	Monday	Tuesday	Wednesday	Thursday	Friday	SATURDAY	SUNDAY
	Tuesday	Wednesday	Thursday	Friday	SATURDAY	SUNDAY	Monday
	Wednesday	Thursday	Friday	SATURDAY	SUNDAY	Monday	Tuesday
	Thursday	Friday	SATURDAY	SUNDAY	Monday	Tuesday	Wednesday
	Friday	SATURDAY	SUNDAY	Monday	Tuesday	Wednesday	Thursday
	SATURDAY	SUNDAY	Monday	Tuesday	Wednesday	Thursday	Friday
	SUNDAY	Monday	Tuesday	Wednesday	Thursday	Friday	SATURDAY
	Monday	Tuesday	Wednesday	Thursday	Friday	SATURDAY	SUNDAY
	Tuesday	Wednesday	Thursday	Friday	SATURDAY	SUNDAY	Monday
	Wednesday	Thursday	Friday	SATURDAY	SUNDAY	Monday	Tuesday
	Thursday	Friday	SATURDAY	SUNDAY	Monday	Tuesday	Wednesday
	Friday	SATURDAY	SUNDAY	Monday	Tuesday	Wednesday	Thursday
	SATURDAY	SUNDAY	Monday	Tuesday	Wednesday	Thursday	Friday
	SUNDAY	Monday	Tuesday	Wednesday	Thursday	Friday	SATURDAY
	Monday	Tuesday	Wednesday	Thursday	Friday	SATURDAY	SUNDAY
	Tuesday	Wednesday	Thursday	Friday	SATURDAY	SUNDAY	Monday
	Wednesday	Thursday	Friday	SATURDAY	SUNDAY	Monday	Tuesday
	Thursday	Friday	SATURDAY	SUNDAY	Monday	Tuesday	Wednesday
	Friday	SATURDAY	SUNDAY	Monday	Tuesday	Wednesday	Thursday
	SATURDAY	SUNDAY	Monday	Tuesday	Wednesday	Thursday	Friday
	SUNDAY	Monday	Tuesday	Wednesday	Thursday	Friday	SATURDAY
	Monday	Tuesday	Wednesday	Thursday	Friday	SATURDAY	SUNDAY
	Tuesday	Wednesday	Thursday	Friday	SATURDAY	SUNDAY	Monday
	Wednesday	Thursday	Friday	SATURDAY	SUNDAY	Monday	Tuesday
	Thursday	Friday	SATURDAY	SUNDAY	Monday	Tuesday	Wednesday
	Friday	SATURDAY	SUNDAY	Monday	Tuesday	Wednesday	Thursday
	SATURDAY	SUNDAY	Monday	Tuesday	Wednesday	Thursday	Friday
	SUNDAY	Monday	Tuesday	Wednesday	Thursday	Friday	SATURDAY
	Monday	Tuesday	Wednesday	Thursday	Friday	SATURDAY	SUNDAY
	Tuesday	Wednesday	Thursday	Friday	SATURDAY	SUNDAY	Monday
	Wednesday	Thursday	Friday	SATURDAY	SUNDAY	Monday	Tuesday
	Thursday	Friday	SATURDAY	SUNDAY	Monday	Tuesday	Wednesday
	Friday	SATURDAY	SUNDAY	Monday	Tuesday	Wednesday	Thursday
	SATURDAY	SUNDAY	Monday	Tuesday	Wednesday	Thursday	Friday
	SUNDAY	Monday	Tuesday	Wednesday	Thursday	Friday	SATURDAY

* 1752 same as 1772 from January 1 to September 2. From September 14 to December 31 same as 1780 (September 3–13 were omitted).—This calendar is from Whitaker's London Almanack, with some revisions.

241 *Clerk's Certificate.*

UNITED STATES OF AMERICA,
District of Maine, ss:

I, James E. Hewey, Clerk of the District Court of the United States for the District of Maine within the First Circuit, hereby certify that the three (3) volumes entitled as follows:

Volume I, Plaintiffs' Record,—Pleadings, Testimony and Exhibits;

Volume II, Defendant's Record,—Pleadings, Testimony and Exhibits;

Volume III, Proceedings in said District Court with References to Volumes I and II;

this certificate being attached to each of said three volumes, contain and are a true copy of the record and all proceedings of said District Court in the cause in equity entitled,

No. 705.

THE NATIONAL MALLEABLE CASTINGS COMPANY and JACOB J. BYERS, Plaintiffs,

v.

THE T. H. SYMINGTON COMPANY, Defendant.

in said District Court determined, the Opinion of the District Court of April 8, 1915 (dismissing Bill of Complaint), the Petition for Appeal and Assignment of Errors, Bond to Party on Appeal, Præcipe as to Appeal Record, and also the original Citation, issued upon said Petition for Appeal, with Acknowledgment of Service thereon by counsel of record.

In testimony whereof, I have hereunto set my hand and affixed the seal of said District Court, at Portland, in said District of Maine, this fourth day of September, A. D. 1915.

[SEAL.] JAMES E. HEWEY, *Clerk.*

242 United States Circuit Court of Appeals for the First Circuit.

No. 1147.

THE NATIONAL MALLEABLE CASTINGS COMPANY et al., Plaintiffs, Appellants,

v.

THE T. H. SYMINGTON COMPANY, Defendant, Appellee.

Clerk's Certificate.

I, Arthur I. Charron, Clerk of the United States Circuit Court of Appeals for the First Circuit, certify that the three volumes, entitled in the above cause, namely:—

Volume I, Plaintiffs' Record;
Volume II, Defendant's Record;
Volume III, Proceedings in District Court;

this certificate being attached to each of said three volumes, contain and are a true copy of the record in said cause in said court.

In testimony whereof, I hereunto set my hand and affix the seal of said United States Circuit Court of Appeals for the First Circuit, at Boston, in said First Circuit, this first day of July, A. D. 1916.

[Seal United States Circuit Court of Appeals, First Circuit.]

ARTHUR I. CHARRON, *Clerk.*

[United States internal revenue documentary stamp, series of 1914, ten cents, canceled July 1, 1916. A. I. C.]

243 Volume II.

United States Circuit Court of Appeals for the First Circuit, October Term, 1915.

No. 1147.

THE NATIONAL MALLEABLE CASTINGS COMPANY et al., Plaintiffs, Appellants,

v.

THE T. H. SYMINGTON COMPANY, Defendant, Appellee.

Appeal from the District Court of the United States for the District of Maine.

From Final Decree (Hale, J.), May 24, 1915.

Certified Copy of Record and All Proceedings in said Cause to and Including July 1, 1916.

1 District Court of the United States, District of Maine.

In Equity. No. 705.

On Patent No. 673,419.

THE NATIONAL MALLEABLE CASTINGS COMPANY and JACOB J. BYERS, Plaintiffs,

vs.

THE T. H. SYMINGTON COMPANY, Defendant.

Answer to Amended Bill.

In answer to the amended bill of complaint, The T. H. Symington Company, says:

I. As to the allegations contained in the paragraph of the bill of complaint numbered one—it is not informed whether Jacob J. Byers is a citizen of the United States or of the State of Illinois or resides in the City of Chicago, and it is not informed as to whether The National Malleable Castings Company is a corporation organized under the laws of the State of Ohio or a citizen of that State, or as to the location of the business of the said corporation.

II. In answer to the allegations contained in the paragraph of the bill of complaint numbered two—it denies that Jacob J. Byers was on the 21st of April, 1900, the inventor of any of certain alleged improvements in Draft Rigging described in the United States patent No. 673,419, within the meaning of the statutes of the United States then in force and that he was entitled to a patent
2 thereon under the said Statutes, and it further is not informed as to whether the requirements of the Statutes then in force

were duly complied with, with the result that the alleged patent issued on the 7th day of May, 1901.

The defendant states, in answer to this portion of the bill, that the allegations "being entitled to a patent thereon under the provisions of said Statutes," lines 15 and 16 of page 1 of the bill, and "all the requirements in the Statutes of the United States then in force having been duly complied with," lines 19 and 20 same page, are insufficient to support this action.

The defendant further alleges upon information and belief that the said Jacob J. Byers was not the original inventor of the alleged invention described and claimed as new by him in the said Letters Patent No. 673,419, but that all material parts thereof, described in the claims declared upon, were, prior to the supposed invention by the said Jacob J. Byers, known to and invented by others; that John A. Pilcher, of Roanoke, Virginia, on the 7th day of April, 1898; James E. Simons, of McKees Rocks, Pennsylvania, on or about September 10th, 1898, and James A. Hinson, of Chicago, Illinois, on or about February 3rd, 1899; William Case, of Chicago, Illinois, prior to May 21st, 1897; and C. W. Coller and J. S. Naery, of Lafayette, Indiana, prior to June 28th, 1898, had perfected the same before the application upon which the patent in suit issued, was filed.

The defendant alleges that the patent No. 673,419 is invalid because the claims do not describe a structure capable of accomplishing the functions stated therein, because the parts therein described do not form a patentable combination, and because the patented device is not useful and is impracticable for use under the conditions under which it is meant to be used, and therefore inoperative. and that all material and essential features and parts of the thing patented in the said patent No. 673.419, were, previous to the alleged invention of the said Jacob J. Byers, fully described and set
3 forth in the following printed publications and patented long prior to the alleged invention or discovery thereof by the said Jacob J. Byers, and could not therefore be patented to him in accordance with the provisions of the Statute, to wit, Letters Patent of the United States as follows:

Name.	Number.	Date.
Perry	228,385	June 1, 1880
Frost	510,854	December 12, 1893
Frost	532,272	January 8, 1895
Schroyer	544,009	August 6, 1895
Ronemus	545,096	August 27, 1895
Tomlinson	545,555	September 3, 1895
Stout	568,378	September 29, 1896
Pilcher	616,965	January 3, 1899
Simons	627,540	June 27, 1899
Coller and Naery	627,905	June 27, 1899
Hinson	635,322	October 24, 1899
Case	644,041	February 20, 1900
Reagan	491,785	February 14, 1893

Clark	497,264	May 9, 1893
Mitchell	517,146	March 27, 1894
Shaaber	115,986	June 13, 1871
Miner	570,038	October 27, 1896
Lake (British)	11,060	July 15, 1890

III. In answer to the allegations contained in the paragraph of the bill of complaint numbered three—it is not informed as to whether the plaintiffs are the owners of said Letters Patent No. 673,-419, and did own the same during the period of the alleged infringement complained of in the bill.

IV. In answer to the allegations contained in the paragraph of the bill of complaint numbered four—the defendant denies that it has infringed the alleged Letters Patent No. 673,419, or claims 1, 2, 3, 5, 6, 7, 8 and 10 thereof, and that it intends to infringe or has threatened to infringe or continue to infringe the same. It further
4 denies that it has wrongfully and without license or consent of the plaintiffs or otherwise, manufactured and sold, or contracted to sell, draft riggings or essential parts thereof embodying or intended and designed to be used with other parts to embody the alleged invention set forth in said Letters Patent, particularly claims 1, 2, 3, 5, 6, 7, 8 and 10 thereof.

The defendant also alleges that the charge of infringement contained in the bill is insufficient, first, in that it is made on information and belief instead of positively, and second, in that it purports to be based not upon any overt act on the part of the defendant, but merely on a contract said to have been entered into by it.

Defendant further states that the alleged infringement relates to the manufacture of, or proposal to manufacture, draft gears in accordance with U. S. Patent to Emerick, No. 693,643, of which it is the owner, and that the alleged infringing structure described in patent No. 693,643, was invented and developed by William H. Emerick, now of Omaha, Nebraska, during the spring and summer of 1899, prior to the filing date of the Byers application upon which patent No. 673,419, issued, and prior to the alleged invention of Jacob J. Byers, and that claims 1, 2, 3, 5, 6, 7, 8 and 10 of the patent in suit, if they are to be read on this device, are invalid because they relate to a structure of which the patentee, Jacob J. Byers, was not the original and first inventor.

V. In answer to the allegations contained in the paragraph of said bill of complaint numbered 5, the defendant denies on information and belief that draft riggings made in accordance with patent No. 673,419, have been manufactured and sold by the plaintiff and it denies that any draft riggings have been made in accordance with the patent or that any such draft riggings marked with the word "Patented" together with the date of the issuance of the alleged Letters Patent, have been made or sold.
5 The defendant further denies that it has infringed or profited by any such infringement of Letters Patent No. 673,419.

VI. It submits that under the circumstances hereinbefore appear-

ing, it is free to manufacture draft gears of the various types which it has made or agreed to make, and to use and sell or contract to sell the same, and that the said bill should therefore be dismissed.

THE T. H. SYMINGTON COMPANY,
By EDWIN F. SAMUELS,
LIBBY, ROBINSON & IVES,
Solicitors for Defendant.

STEUART & STEUART,
Of Counsel for Defendant.

STATE OF MARYLAND,
City of Baltimore, ss:

W. G. Hoffman, Jr., being duly sworn, deposes and says that he is the Treasurer of The T. H. Symington Company, the defendant named in the foregoing answer; that he has read the same and knows the contents thereof and that the same is true of his own knowledge except as to matters therein stated to be alleged upon information and belief, and as to those matters, he verily believes it to be true.

W. G. HOFFMAN, JR.

Subscribed and sworn to before me, a notary public, this 31st day of January, 1914.

EDWARD L. BASH,
Notary Public.

6 District Court of the United States, District of Maine.

In Equity. No. 705.

On Patent No. 673,419.

THE NATIONAL MALLEABLE CASTINGS COMPANY and JACOB J. BYERS, Plaintiffs,

vs.

THE T. H. SYMINGTON COMPANY, Defendant.

Defendant's Answers to Plaintiffs' Interrogatories.

STATE OF MARYLAND,
City of Baltimore, ss:

T. H. Symington, in response to the interrogatories propounded by the plaintiffs, answers as follows:

Interrogatories Nos. 1 and 2. The T. H. Symington Company did not, during the period named, sell, for installation on the Boston & Maine Railroad, any cheek castings or spacer blocks resembling those shown in the blue print annexed to the interrogatories. It did, dur-

ing August, 1913, agree to furnish to the Pressed Steel Car Company, cheek castings and spacer blocks which I understand were for application to certain center constructions which that company was bidding on for the Boston & Maine Railroad. The parts referred to are illustrated in the blue prints annexed hereto, marked Card G-34 and Card F-1653. These parts correspond to the side or cheek
7 castings and spacer blocks, marked "A" and "B" in the drawing annexed to the interrogatories. No payment for these parts was received nor were any of them delivered.

Interrogatory No. 3. It did not.

Interrogatory No. 4. The defendant, The T. H. Symington Company, did, during the period named, receive a blue print which I believe originated with the Boston & Maine Railroad Company to be used as a basis for bids for cheek castings and spacer blocks for draft gears, which correspond to the side or cheek castings and spacer blocks marked "A" and "B" in the drawing annexed to the interrogatories.

Interrogatory No. 5. The business which we did with the Pressed Steel Car Company was solicited personally by one of our representatives and these negotiations were not in writing. A blue print, referred to in the previous answer, which I believe originated with the Boston & Maine Railroad Company, was submitted to us and is hereto attached.

Interrogatory No. 6. As stated in the answer to the first interrogatory, we made no such sale during the period specified. The draft rigging parts, namely cheek plates and spacer blocks, which we agreed to furnish, while they were capable of being otherwise utilized, could be assembled in accordance with the blue print attached to the interrogatories and are preferably so assembled, as thus assembled, they form a structure in exact accordance with the U. S. Patent to Emerick, No. 693,643, which is the property of the defendant in this case, but the parts referred to were never during the
8 period named, put into actual use in the patented combination covered by any of the claims in the patent in suit.

Interrogatory No. 7. A blue print was submitted to our company during the period named, as a basis for bids for draft gear parts to be installed on the cars of the Boston & Maine Railroad Company. There was no writing, no deposit and no delivery. The annexed print, 11841-C, is a duplicate of this.

Interrogatory No. 8. The defendant received no specifications describing the cheek plates and spacer blocks which were the subject of the verbal agreement to which I understand this question relates. The drawing is referred to in answer to interrogatory No. 6.

Interrogatory No. 9. Defendant is instructed by this Court that it need not answer.

T. H. SYMINGTON,
President of the T. H. Symington Co., Defendant.

Subscribed and sworn to before me, a Notary Public, in and for the City of Baltimore, State of Maryland, this 5th day of May, 1914.

JENNIE FARSON,
Notary Public.

9 In the District Court of the United States, District of Maine.

In Equity. No. 705.

On Patent No. 673,419.

THE NATIONAL MALLEABLE CASTINGS COMPANY and JACOB J. BYERS, Plaintiffs,

vs.

THE T. H. SYMINGTON COMPANY, Defendant.

Depositions of witnesses examined on behalf of Defendant pursuant to annexed notice at the office of Steuart & Steuart, 809 Maryland Trust Building, in the City of Baltimore, State of Maryland, on the 3rd day of July, 1914, before Edward L. Bash, Esq., Notary Public, acting as special examiner by consent.

Present: Edwin F. Samuels, on behalf of Defendant, George I. Haight and Clarence D. Kerr, on behalf of Plaintiffs.

Stipulation.

For the purpose of expediting the final determination of this cause, it is hereby stipulated by and between counsel for the plaintiffs and counsel for Defendant that the Defendant acknowledges the corporate existence of The T. H. Symington Company as a corporation organized and existing under and by virtue of the laws of the State of Maine, of which State it is, for the purposes of pleading,
10 termed a citizen; and further, it acknowledges that it has its principal place of business in the City of Baltimore, State of Maryland.

It is further admitted that the National Malleable Castings Company is a corporation organized and existing under and by virtue of the laws of the State of Ohio, and a citizen of said State, having its principal place of business in the City of Cleveland, County of Cuyahoga, State of Ohio; and that Jacob J. Byers, is a citizen of the United States and of the State of Illinois, residing in the City of Chicago, in said State; that all Letters Patent of the United States and other countries referred to in this case, may be proven by filing regular printed copies of the patents issued by the respective Governments to have the same force and effect as evidence on behalf of either Plaintiffs or Defendant, as if duly certified by the respective Governments; that the various exhibits introduced in evidence by the respective parties may be retained by counsel introducing the same until the testimony in the case is closed and that thereafter such exhibits shall be deposited with the Clerk of the Court, subject however, to the rights of the opposing counsel to examine and use the said exhibits when necessary and proper in the taking of deposi-

tions in this case and upon proper notice being given; that the United States Patent to Emerick, No. 693,643, is the property of the defendant and that the patent to Byers, No. 673,419, is the property of the plaintiffs.

August G. Sandman.

AUGUST G. SANDMAN, a witness produced on behalf of the defendant, being first duly sworn, in answer to interrogatories propounded by Mr. Samuels, testified as follows:

Q. 1. Please state your name, age, residence and occupation.

A. A. G. Sandman; age, 51 years; residence, Baltimore;
11 chief draftsman Motive Power Department B. & O. Railroad Co.

Q. 2. Are you skilled in the draft gear art and do you understand the operation of draft gears.

Mr. Kerr: Objected to as leading.

A. Yes.

Q. 3. State your experience in this line and your qualifications as one skilled in the art.

A. I served an apprenticeship in the Motive Power Department of the Baltimore and Ohio Railroad and worked five years as a journeyman in the shops. After that I was transferred to the drawing office as draftsman. In the meantime however, I had attended the Maryland Institute School of Art and Design and took the course in mechanical drawing, graduating in the Class of 1885. In the drawing room I worked as a draftsman on locomotive and car work for about five years; then I was draftsman in charge of car work exclusively for a term of three years, reporting direct to the Master Car Builder. Following that I was assistant to the chief draftsman for a period of five years, having general charge of the car construction work going through the office covering the whole B. & O. system. Since 1901 I have been in the position of chief draftsman in the Motive Power Department, having charge of the designing of the freight car equipment in use, and of all rolling stock equipment in the service, designing the cars, draft gears and everything in that line, which position I still hold today.

Q. 4. State what is your exact duty in connection with the various equipment installed on the Baltimore and Ohio Railroad.

A. In that connection, the duty of this position is to design cars and all the equipment which applies to these cars, such as draft gears, air brakes and everything pertaining to the construction of the cars.

Q. 5. How long has this been your duty?

12 A. This has been my duty—I have been chief draftsman since 1901, and I had charge of that work about eight or ten years previous.

Q. 6. As chief draftsman am I correct in understanding that you have had charge of the work throughout your office, particularly the designing of draft gears?

Mr. Kerr: Objected to as leading.

A. Yes.

Q. 7. I hand you a copy of the U. S. Patent to Byers, No. 673,419. Please examine it and tell what it shows and describes.

Mr. Kerr: Objected to as incompetent, the witness not having qualified as an expert in the interpretation of patents and as immaterial and irrelevant.

Mr. Samuels: The witness does not appear as a patent expert, but is merely passing on the disclosure of the patent as a mechanic and technical man, skilled in the draft gear art.

Mr. Kerr: The attention of the court is called to the character and scope of the question asked the witness.

A. I find that this patent shows a housing casting surrounding a twin spring draft gear. The springs and followers are supported at the bottom with plates. The draft gear yoke passes around the springs and follower plates in a horizontal plane and is riverted to the drawbar by means of a key.

Q. 8. Referring to Figures 1 to 9, how do you find the yoke to be fastened to the drawbar.

Mr. Kerr: Same objections.

A. In Figure 2, I find the yoke is secured to the drawbar with rivets—that appears in Figures 1, 2 and 3. In Figures 6, 7 and 8, I find the yoke is secured to the drawbar by a key, which is riveted over on each end.

Q. 9. Would you refer to these connections as removable?

Mr. Kerr: Objected to as leading and the former objections are also repeated.

13 A. These connections are not removable, except by cutting them out of the gear.

Q. 10. You have referred in one of your answers to a housing casting. Tell what you mean by that and what you know of it as a practical draft gear structure.

Mr. Kerr: Objected to as incompetent, the witness not having qualified as an expert in the interpretation of patents, and as immaterial.

A. The housing casting surrounding the draft gear is made in one piece with an opening on the front and rear for the insertion of the drawbar and yoke, and upon the bottom for convenience in applying the draft gear and followers.

Q. 11. Tell what you know as a draft gear man, as to the practicability of this structure, particularly the housing casting, to which you refer, made in a single piece.

Mr. Kerr: Same objections.

A. From a practical standpoint, I would not consider this housing

casting as a practical proposition due to the fact that it is all made in one piece.

Q. 12. Did you ever see one in use or know of such a casting having been in use or offered to your railroad?

Mr. Kerr: Same objections.

A. I have never seen a housing casting of this type used in the draft gear service. I do not consider this casting a practical application of a draft gear.

Q. 13. Tell whether any such casting has ever been offered to your railroad during your term as chief draftsman.

Mr. Kerr: Objected to as immaterial and incompetent.

A. No; there has never been any such casting offered.

Q. 14. I hand you a copy of the Emerick patent No. 693,643, which you will please examine and tell what it shows?

14 Mr. Kerr: Objected to as incompetent, as immaterial and irrelevant, the filing date of the Emerick patent being subsequent to that of the Byers patent, and further objection is made to the witness testifying thereon as he has not qualified as an expert in the interpretation of patents.

A. This patent shows a twin spring draft gear with a yoke in the horizontal plane and secured to the draw-bar and coupler by means of a key, and having cheek castings attached to the sills for the purpose of securing the draft gear to the car.

Q. 15. How many cheek castings are there in this draft gear?

Mr. Kerr: Objected to as incompetent and immaterial.

A. There are two cheek castings one on each side, attached to the sills of the car.

Q. 16. Do you consider this a practical device?

Mr. Kerr: Objected to as incompetent and immaterial.

A. This application of draft gear is entirely practical and illustrates the general practical application of draft gear of this type, using a horizontal yoke.

Q. 17. Is this or an equivalent in use?

Mr. Kerr: Same objection.

A. Yes; similar draft gears are used.

Q. 18. Under what name is that draft gear you refer to sold?

A. That draft gear is sold by The T. H. Symington Company.

Mr. Kerr: The question and answer are objected to as incompetent and immaterial.

Q. 19. I hand you a model, marked A for identification. Please examine it and tell what it is.

Mr. Kerr: Same objection.

A. This model represents a cheek casting for draft gears, having

a groove through the center to receive the draft gear yoke and has four lugs, two in the front and two in the rear, for receiving
15 the shock and pull of the draft gear through the follower plate.

Q. 20. How does this compare to the cheek plate shown in the Emerick patent to which you refer?

A. This model is similar to the cheek casting illustrated on the Emerick patent.

Q. 21. You mean by that it is practically the same thing.

Mr. Kerr: Same objection, and as leading.

A. Yes; it is practically the same thing.

Q. 22. I hand you a drawing, which is the drawing annexed to the interrogatories filed by the plaintiffs in this suit. Please examine the drawing and tell what type of draft gear it represents.

A. This drawing shows a twin spring draft gear with separate or counterpart cheek castings and a draw-bar yoke on a horizontal plane, attached to the coupler with a draft key.

Q. 23. Compare it with the structure of the Emerick patent.

Mr. Kerr: Objected to as incompetent, the witness not having been qualified as an expert in the interpretation of patents and as immaterial and irrelevant.

A. (Please hand me a copy of the Emerick patent). This drawing shows a draft gear practically the same as shown by the Emerick patent, No. 693,643.

Q. 24. Compare the structure of the drawing annexed to the interrogatories to that disclosed in the Byers patent.

Mr. Kerr: Same objection.

A. The drawing shows a draft gear with separate or counterpart cheek castings, while the Byers patent shows a housing casting. The drawing shows the yoke attached to the coupler by a removable key, while the Byers patent shows the yoke secured to the coupler permanently by a riveted key.

Q. 25. How about the structure disclosed in Figures 10, 11 and 12 of the Byers patent, particularly with reference to the key?

16 A. These figures of the Byers patent show the key passing through the yoke and coupler and extending through the housing casting and engaging the American Continuous Draft Rods on each end of the key.

Q. 26. In your estimation, is this key a connection which is conveniently removable?

Mr. Kerr: Objected to as incompetent, immaterial and as leading.

A. This key is not conveniently removable as in removing the key, the American Continuous Rods would fall to the ground.

Q. 27. Please read the last paragraph on page 1 of the Byers patent and tell what particular form of draft gear you think the patent is intended to cover.

Mr. Kerr: Objected to as incompetent and as obviously a matter

upon which the witness is not qualified to speak, and as leading and immaterial.

A. "In Figures 10 to 12 on the third and fourth sheets of the drawings, I show my improvement applied to use with the American continuous system, in which the draw-bars at the opposite ends of the car are connected by transverse keys and longitudinal rods, and to this construction, I intend to make specific claim in addition to my generic claims. In these figures I show the rigging provided with metal draft-arms 13, which may be cast integrally with each other and with the pocket above described and which are abutted against the ends of the draft-timbers 14, of which they form a continuation and to which they are secured by bolts 15."

This shows that it was intended to be used with the American Continuous draft rods and keys, the draft casting being made in one integral part with shoulders abutting against the end of the draft-timber.

Q. 28. Do you find that this patent discloses anything in the way of separate cheek plates or anything as a substitute for a housing casting?

Mr. Kerr: Objected to as grossly leading and as incompetent.

17 A. The patent discloses the housing casting only. There are no separate cheek castings illustrated whatever.

Q. 29. Under the present conditions of the draft gear trade, do you think it possible that any dealer, would offer for sale a draft gear embodying such a casting as the housing casting referred to?

Mr. Kerr: Objected to as speculative, incompetent and as leading and immaterial.

A. I do not know of any such draft gear castings being offered for sale up to the present time, and from a practical standpoint, I do not believe such castings would be offered in the form illustrated.

Q. 30. I hand you a copy of the patent to Simons, No. 647,540. Please examine it and tell in a general way what the drawing discloses.

Mr. Kerr: Objected to as incompetent, immaterial, the witness not having qualified as an expert in the interpretation of patents.

A. This patent shows a twin spring draft gear with the yoke in a vertical plane secured to the coupler and with the follower plates extending through the draft sills and secured at the ends with angle irons fastened with bolts.

Q. 31. Tell how you, as draft gear man, would go to work to remove the springs and followers of this draft gear?

Mr. Kerr: Objected to as incompetent, immaterial and irrelevant, the witness not having shown that he has had any practical experience in the last twenty-five years in the draft gear art.

A. To remove these springs and followers, I would remove the angle irons at the end of the follower plates by removing the bolts

securing them to the sills, after which the springs and followers could be removed by pulling them out on a horizontal plane.

Q. 32. Compare the method and the ease and convenience with which these may be removed, to the method of removing the Byers springs and followers, and the ease and convenience with which they may be removed.

18

Mr. Kerr: Same objections.

A. The springs and followers in the Simons draft gear are removed by taking down the angle plate at the end of the follower plates and removing the draft gear on a horizontal plane, while on the Byers patent, it is required to remove the plate at the bottom of the housing and the draft springs and followers are removed in a vertical plane, the method being practically the same, except that in one case it is horizontal and in the other, vertical.

Q. 33. How would these two structures compare if either one were turned at an angle of 90 degrees to its present position?

Mr. Kerr: Objected to as speculative and incompetent and immaterial.

A. This would make them practically identical.

Q. 34. Do you find one more difficult to remove than the other?

Mr. Kerr: Objected to, there being no basis for the question, and as incompetent and immaterial.

A. There is practically no difference.

Q. 35. I hand you a copy of the patent of Frost, No. 522,272. Please examine this and tell what it discloses in the nature of a draft gear.

Mr. Kerr: Objected to as incompetent, the witness not having qualified as an expert in the interpretation of patents and as immaterial and irrelevant.

A. This patent shows in Figure 1 a plan view of a spring draft gear with a draw-bar yoke in a horizontal plane secured to the coupler, the follower plates bearing against clips of their equivalent.

Q. 36. What would you consider to be the equivalent of clips in that case?

Mr. Kerr: Objected to as incompetent.

A. Clips or their equivalent would be stop lugs or bearings for the follower plates to take the shock and pull of the draft gear.

19

Q. 37. What is the function of the clips in regard to the follower?

Mr. Kerr: Same objection.

A. The function of the clips is the same as the lug or shoulder on a check casting.

Q. 38. Then what would you consider the equivalent of the clips?

Mr. Kerr: Same objection.

A. I would consider the cheek casting the equivalent of the clips.

Q. 39. Are the springs and followers in this draft gear removable vertically from below, independently of the draw-bar, and if so, how would this be accomplished?

Mr. Kerr: Same objection, and as leading.

Mr. Samuels: The question is merely a quotation from the Byers patent.

Mr. Kerr: Obviously not a justification for asking a leading question. It merely makes the fact that it is leading more gross.

A. To remove the draft gear, that is the springs and followers, the spring would be removed vertically by first removing the supporting plate from below and then turning the follower plates at right angles to the yoke and removing them in like manner.

Q. 40. You have referred to this draft gear as having a horizontal yoke. What do you consider the yoke and what is its relation to the draw-bar?

Mr. Kerr: Same objection.

A. This yoke is shown on a horizontal plane surrounding the draft gear followers and springs, and is attached directly to the coupler.

Q. 41. In what figure?

A. It is shown in Figure 1 of the patent.

Q. 42. By coupler do you mean draw-bar—is that an equivalent term?

20 A. Draw-bar and coupler are equivalent terms in general practice.

Q. 43. You have stated that you are employed by the Baltimore and Ohio Railroad Company, are you in any way interested in this suit or in the defendant company?

A. I have no interest whatever in the suit nor in the defendant company.

Q. 44. You have referred to a twin spring in several instances—what is a twin spring and why is it used as distinguished from a single spring?

A. A twin spring is used to increase the capacity instead of using one spring in the draft gear as was the practice in the earlier stages when cars were of very light capacity. Later on when the cars were increased in weight and capacity, it became the practice to use twin springs to increase the capacity of the draft gear.

Q. 45. Is this the mere addition of another spring to increase the capacity of the gear relatively to the increase in weight of the cars?

Mr. Kerr: Objected to as grossly leading, incompetent and immaterial.

A. It is merely the use of another spring—two springs instead of one—to increase the capacity of the gear.

Q. 46. Do you consider that two springs may be substituted for one or one for two, obviously merely to provide for extra weight?

Mr. Kerr: Same objection.

A. One or two springs may be used as may be found necessary to suit the capacity of the gear required.

Mr. Samuels: Counsel for defendant offers in evidence a cheek plate model, marked A for identification, and requests the notary to mark same "Defendant's Exhibit A," and also produces in evidence a copy of each of the following patents:

21 Byers, No. 673,419;
Emerick, No. 693,643;
Frost, No. 532,272;
Simons, No. 627,540.

Mr. Kerr: The model of the cheek plate A is objected to as immaterial and irrelevant. The Frost and Simons patents are objected to as immaterial and irrelevant. The Emerick patent is objected to as immaterial, incompetent and irrelevant and as being of later date than the patent in suit and is incompetent for the pleadings having no proper foundation in the record, and the objections made with regard to the Emerick patent are also made with regard to Exhibit A which was offered in evidence in connection with the Emerick patent.

Q. 47. I hand you herewith copy of the Frost patent, No. 510,854, which you will please examine and state what it shows, and compare it to the Frost patent No. 532,272.

A. The difference in these patents is in the form of the draw-bar coupler.

Q. 48. Then your opinion of the draft gears is that they are substantially the same?

Mr. Kerr: Objected to as leading, incompetent and immaterial, and as merely calling for a conclusion.

A. This is implied by my previous answer.

Mr. Samuels: Direct examination closed.

Counsel for defendant offers in evidence the Frost patent No. 510,854.

Mr. Kerr: Objected to as immaterial and irrelevant.

Cross-examination by Mr. Kerr:

X Q. 1. You have stated that the construction shown in the blue print attached to plaintiffs' interrogatories is substantially that of the Emerick patent. Where in the blue print do you find any

22 such construction of rods or bolts 24 and 25, such as is best shown in Figure 4 of the Emerick patent?

A. The bolts 24 and 25 are shown in the patent as passing through the follower plates and through the center of the draft spring and plates which are sometimes used to support the draft springs and are not disclosed on the blue print.

X Q. 2. In the blue print attached to plaintiffs' interrogatories,

there is shown a spacer block, marked B, which separates the springs. Point out where in the Emerick patent you find such a spacer block.

A. The function of this spacer block is to keep the springs equidistant, and corresponds with the function of the two bolts mentioned in the previous question. The spacer block is not shown on the Emerick patent.

X Q. 3. In the structure of the blue print attached to plaintiffs' interrogatories, there is a channel or recess in each cheek plate A which closely confines the yoke against vertical movement, is there not?

A. This drawing shows a groove for supporting the yoke in a vertical plane.

X Q. 4. Is there any such construction shown in the Emerick patent as is mentioned in the last question and answer?

A. Such a groove is shown in each cheek casting.

X Q. 5. Please examine these drawings closely and see whether there is any groove, and if so, point out such a groove and state whether it closely confines the complex yoke against vertical movement.

A. Figure 5 shows a groove confining the yoke.

X Q. 6. I assume that you mean that the yoke is confined between the parts marked 31; is that correct?

A. No; the yoke is confined in each casting to prevent vertical movement. It is carried on the shoulder below and would also be supported against the shoulder above in the event of an upward movement.

X Q. 7. As I understand your answer, you mean that the cheek casting extends closely around the yoke and engages it at the
23 parts which I shall mark D and E; is that correct?

A. That shows the groove for supporting the yoke; I see now it is also shown in Figure 7.

X Q. 8. Am I correct in understanding that you mean the points in the arrows extending from the letters D and E, mean the upper and lower walls of the recess in the cheek casting?

A. That means the walls surrounding the yoke, the edges of the groove. That is the edge of the groove to keep the yoke in a horizontal plane.

X Q. 9. Do you understand that in the Emerick patent, these grooves extend through the length of the casting?

A. They are so shown on the patent drawing.

X Q. 10. In what figures are they so shown?

A. That is shown extending through in Figure 7.

X Q. 11. Is there any difference between the groove in the model Exhibit A and what you term a groove in the castings 10 and 11 of the Emerick patent.

A. Substantially the same thing.

X Q. 12. When you say "substantially" do you imply any difference?

A. No; I do not mean that there is any difference, I mean that it is substantially or practically the same thing, as near as it can be made.

X Q. 13. In Figure 5, the follower shown in the drawing is shown to be of considerably less width than the space between the cheek castings 10 and 11. What, if anything, is there to prevent lateral movement of the followers between these cheek castings?

A. The sides of the cheek casting would prevent the lateral movement of the follower plate and also the sides of the yoke which surrounds the follower plates.

1.00 P. M.—Adjourned until 1.45 for lunch.

1.45—Cross-examination continued:

X Q. 14. Have you seen all of the draft gear constructions used by the Baltimore and Ohio for the past twenty years?

24 A. I have seen all, I think, inside of that time.

X Q. 15. Have you seen them on cars?

A. I have seen them on cars and I have seen the designs which passed through the office.

X Q. 16. Have you seen all on cars?

A. I have seen all of the draft gears that have been applied to the B. & O. cars.

X Q. 17. Has it been a common practice during the past twenty years to employ two-piece castings for draft gears?

A. It has been the common practice during that time to employ the two-piece counterpart draft gear castings.

X Q. 18. What do you know about the types of draft gears used on other railways from actual observation?

A. I have only a general knowledge of what other roads are using by seeing their cars in terminals and other points, and as we find them in interchange on the B. & O. lines.

X Q. 19. When two cheek plate castings, such as are shown in the defendant's exhibit model, are attached to the draft sills and assembled with the yoke, spring rigging, followers, coupler, spacer block and draw-bar, with which they are intended to be used, as is shown in the blue print attached to plaintiffs' interrogatories, does such a construction not show (1), a yoke, the arms of which are connected to the sides of the draw-bar, (2) springs arranged one above the other within the yoke, and (3) followers also arranged between the arms of the yoke, said springs and followers being removable from below without the necessity of removing the draw-bar?

Mr. Samuels: The question is objected to as outside the scope of the direct examination, and further as calling for the construction of a claim, the witness having been qualified as a practical man skilled in the art and not as a patent expert, accustomed to construing the claims of patents, the question being merely a quotation from one of the claims of the Byers patent.

25 (Mr. Samuels hands the witness a copy of the Byers patent and of the drawing annexed to the interrogatories).

A. The drawing shows the counterpart draft castings with grooves for receiving the draft yoke with the followers and springs placed

between the yoke and abutting against the lugs, forward and back, on the cheek plates. The springs and followers are removable by removing the carrier plate from below.

X Q. 20. You have not answered the question. I asked you specifically to state whether, when the parts are assembled in the manner shown in the blue print in your hand, such a construction shows: (1) A yoke, the arms of which are connected to the sides of the draw-bar; (2) springs arranged one above the other within the yoke; and (3) Followers also arranged between the arms of the yoke. To simplify the matter, will you please answer the question given thus far?

Mr. Samuels: Objection repeated. The witness has not attempted to qualify as a patent expert and this question is merely a claim quoted from the patent in suit. The question is also outside the scope of the direct examination and therefore improper cross-examination.

A. The springs are arranged between the followers vertically, one over the other, and the end of the yoke is attached to the draw-bar. The yoke is in a horizontal position, and the follower plates are located between the yoke abutting against the forward and back ends of the cheek plates.

Mr. Samuels: I would like to have the witness state whether he refers to the patent or to the blue print.

Mr. Sandman: I refer to the blue print.

X Q. 21. Still referring to the blue print attached to plaintiffs' interrogatories, please state whether the springs and followers are removable from below and can be taken down without removing the draw-bar. Answer yes or no.

26 A. The springs and follower plates can be taken down by removing the carrier plate leaving the coupler and yoke in position to be removed.

X Q. 22. In what other way can the cheek plates marked A and the spacer blocks B in the blue print attached to plaintiffs' interrogatories be used than with the structure shown in the blue print?

A. They can be used in the same manner as shown in the Emerick patent, which is substantially the same as this blue print.

X Q. 23. What parts normally extend below the floor of a freight car?

Mr. Samuels: Objected to as outside the direct examination and therefore improper cross-examination.

A. Below the floor line generally are located the sills and the draft gear bolster, needle beams, thrust rods, air brake equipment, body bolster, and the truck.

X Q. 24. What space is normally used for the draft rigging or draft gear?

A. The draft gear is generally applied between the draft sills or center sills.

X Q. 25. And if you took a transverse section through the car at the point at which the draft gear or draft rigging is applied, what

other parts would you find extending below the level of the car, outside the center sills which I understand normally support the draft rigging?

A. This section being taken through the sills and draft gear, we would see the construction of the longitudinal elements of the car, depending upon the point where the section was taken.

X Q. 26. Is that all?

A. Yes.

X Q. 27. You have misunderstood my question. I want to get an enumeration of all of the parts lying underneath the floor of the car in addition to the draft gear and the center sills to which it is attached.

27 A. I think I enumerated all the parts in my former answer with the possible exception of the end sill.

X Q. 28. Are the longitudinal sills immediately adjacent the center sills in these freight cars?

A. No.

X Q. 29. How far are the nearest sills normally away from the center sills?

A. The intermediate sills which are on the same horizontal plane with the center sills are shown spaced from ten to twelve or fourteen inches depending upon the number of intermediate sills used in the gear.

X Q. 30. Referring to the Simons patent, No. 627,540, have you ever seen such a draft gear?

A. I do not recall having seen such a draft gear applied to a car.

X Q. 31. Referring again to the Simons patent, what would happen to the yoke and draw-bar if you pulled the springs and followers out horizontally?

A. The draw-bar and the yoke would be supported by the carrier iron?

X Q. 32. What carrier iron?

A. The draw-bar carrier iron.

X Q. 33. Where is that placed?

A. The draw-bar carrier iron is placed under the draw-bar to support its weight.

X Q. 34. That is forward near the coupler head, is it not?

A. It is towards the forward end of the coupler.

X Q. 35. What is the normal diameter of springs used in such a draft gear?

A. The normal diameter varies from six to eight inches, depending upon the capacity of the springs.

X Q. 36. If these springs are of the normal character, that is six to eight inches in diameter, how wide would the whole gear be, as shown in the Simons patent?

A. That condition would necessitate the follower plates
28 being slightly over sixteen inches long for the eight-inch spring; for the six-inch spring, it would be slightly over twelve inches long.

X Q. 37. So that with an intermediate sill arranged from ten to

fourteen inches away from the center sill, there would not be room enough to draw this gear out horizontally, would there?

A. Yes; the springs could be drawn out separately and the follower plate could be turned at an angle giving plenty of clearance to remove or apply the gear?

X Q. 38. You think that this would be a convenient form of gear to put in and take out?

A. I think it is entirely practical.

X Q. 39. How would you remove the springs separately from the followers in view of the rivet nipples 6 and 6′ as shown in Figure 1?

A. The spring and followers could be turned as far as would be permitted by the sill which in this particular design would give you a great deal more room between the center and intermediate sills, due to the fact that the center sills are placed more closely together—more close than is the regular practice—and due to this fact, you would have sufficient clearance to get the springs and follower plates out.

X Q. 40. Have you ever seen the center sills cut away in the manner shown in the Simons patent?

A. It is an ordinary practice to cut holes in the center sills for the application of the draft gear, although it is not the general practice to apply the follower plates to the sides of the draft sills.

X Q. 41. Have you ever seen a construction in which the draft sills were cut away for the reception of draft rigging to the extent shown in the Simons patent?

A. Not quite to this extent.

X Q. 42. Do you consider it good practice to do so to this extent?

A. I would not advocate this practice in the present state of the art.

29 X.Q. 43. You stated that you found the Simons patent an entirely practical construction. Was that merely an opinion based on your examination of the Simons patent and not from any practical experience with such a gear?

A. I made that statement from my general knowledge of draft gear construction, and while this design is practical, it would probably be more expensive to make the application in the manner shown than could be done otherwise.

X Q. 44. To apply the Simons gear to a car would it not require a considerable re-arrangement of the normal location of the sills and various parts attached to the end of the car adjacent the draft rigging or draft gear?

A. The Simons patent shows the sills located closer together than is the general practice.

X Q. 45. Referring now to the Frost patent No. 532,272, please state how you would apply the springs and follower plates to position after the draw-bar was put in place on the car?

A. The spring and follower plate would be assembled in the yoke by first applying the follower plates and shoving the spring up between the plates. Then the whole mechanism could be applied at one time. Again, the coupler and yoke could be applied to the car

and the follower plates introduced in the yoke and the spring applied from below.

X Q. 46. It is usual in applying the spring and follower members to position in a yoke to enthrust the followers against the ends of the springs, hold them in such position with the spring under compression, and then insert the followers and springs when so held to position in the yoke, is it not?

A. It is the ordinary practice to apply the springs of the draft gear by compressing the spring between the two plates and forcing them up into position between the yoke. That is, where there
30 is no obstacle to interfere with guiding the follower plates into position. In this patent, the follower plate has a lug top and bottom at each end over the edges of the yoke, which requires the plates to be admitted first and the springs afterward, which can be very readily done by clamping the yoke and spring together and applying them all at one time. The difference in the application is simply that in one case, the spring and yoke are compressed and applied together, and in the other case, the follower plates are first applied and the spring forced in between the plates.

X Q. 47. The difference is this, is it not, that in the usual case, the spring is put in position at the same time as the followers with the spring under compression, while in the Frost patent under discussion, the spring is put in without being compressed, is that not the fact?

A. No; the spring can be compressed just as readily without the plates as it can with the plates, and it is frequently done with the spring draft gear. It is not always the practice to apply these parts as one unit. They are frequently applied separately.

X Q. 48. Referring now to Figure 1 of the Frost patent, state how you would remove the spring and followers when the draw-bar is in position on the car.

A. In that case, the spring would be first removed and the follower plates turned to be parallel with the yoke and then they would pass down and be removed from the bottom.

X Q. 49. Suppose you tried to turn the follower 24 around, assuming that the spring has been removed and then took this follower 24 down out of the car?

A. That can be readily done. In fact, it can be brought around to be parallel with the yoke which would allow it to go down and be removed from the bottom.

X Q. 50. Suppose you measure the distance along the top of the follower 24 and show if you have room.

A. Practically doing that is as I illustrated. Remove the
31 spring first and then turn the follower around to be parallel with the yoke and remove it from the bottom. In practice this follower plate would be made of such length as to permit its introduction. Of course, it would be an impracticable proposition to put it in if you could not get it out. In other words, you would not put it in if you could not get it out.

X Q. 51. Did you ever see a device such as is shown in the Frost patent?

A. I do not recall that I have seen any application of this Frost patent.

X Q. 52. During the recess taken for lunch, did you talk with Mr. Samuels, counsel for the defendant, about the case?

A. We talked about the case in a general way. He did not ask me any questions. We talked about it in a general conversation between Mr. Samuels, Mr. Wright, Mr. Trimyer and myself. I do not remember any point which was brought up; there was no specific point brought up, nor any direct reference made to the patents or to the subject except to say that we wanted to get through, and along that line.

Mr. Kerr: Cross-examination closed.

Redirect examination by Mr. Samuels:

R. D. Q. 1. In cross-examination, you made certain references to the positions of the intermediate sills on a freight car, in relation to the center sill. Tell whether there are any such intermediate sills used in the ordinary steam car.

A. The intermediate sills, as I understood the question, referred particularly to wooden construction cars. It is generally known that steel freight cars have no intermediate sills except in some cases of very shallow floor support.

32 R. D. Q. 2. Please state positively whether there are intermediate sills on a steel frame freight car, which would interfere with the removal of the followers and springs in a draft gear such as that shown in the Simons patent.

Mr. Kerr: Objected to as suggestive and immaterial.

A. On the steel freight car there is no intermediate sill which would interfere with the removal of the draft gear parts such as those shown in the Simons patent.

R. D. Q. 3. In the old wooden underframe cars, what was the position of the draft gear vertically relatively to the intermediate sills? Was it above or below or how was it placed?

A. On the old wooden cars, the draft gear is shown as located below the plane of the bottom of the sill.

R. D. Q. 4. How was it related to the intermediate sill to which you refer?

A. It was also placed below the bottom edge of the intermediate sills. The bottom edge of the intermediate sills was generally on the same plane as the center sills. In some cases where the intermediate sills were not so deep, they were a little higher up, giving still more clearance for removal of the draft gear parts.

Mr. Samuels: Redirect examination closed.

Depositions closed.

AUGUST G. SANDMAN.

H. L. Trimyer.

H. L. TRIMYER, a witness produced on behalf of the defendant, being first duly sworn, in answer to interrogatories propounded by Mr. Samuels, testified as follows:

Q. 1. Please state your name, age, residence and occupation.

A. H. L. Trimyer, residence Woodlawn Road; age 39 years; occupation, railway supply business.

33 Q. 2. Are you familiar with draft gears and if so, state the experience from which your knowledge results?

A. My familiarity with draft gears extends over a period of twenty-four years in the railroad business, during which time I occupied the positions of car builder, foreman, general foreman and master car builder. During this period, I came not only in contact with draft gears on the equipment owned by the road with which I was connected, but also inspected all types of draft gears that were in use on practically all equipment. I perfected several patents of my own during this period, which necessitated investigating a great many patents and during the entire twenty-four years I worked entirely on car construction and parts pertaining to cars.

Q. 4. Are you familiar with the various types of draft gear which have been used on railway cars, freight cars, particularly during the last twenty years?

A. I am.

Q. 5. I hand you a copy of the Byers patent, No. 673,419; please examine the patent and tell briefly the nature of the structure disclosed.

A. The Byers patent handed me is a type of draft gear composed of two springs, located in a one-piece housing casting, also having a yoke securely riveted to the coupler. The springs and followers shown in this patent are applied from the bottom and held in position by a plate bolted under same.

Q. 6. State whether you consider the connection of the yoke to the draw-bar shown in the various views to be an easily removable connection, or one which is intended to be permanent.

Mr. Kerr: Objected to as leading and as immaterial.

A. The connection of the yoke to the coupler butt with rivets is a permanent connection and it would be necessary to cut the rivets out to remove the yoke.

34 Q. 7. Do you consider the key connection shown in the American continuous type, a connection which is easily removed or re-assembled?

Mr. Kerr: Objected to as leading and immaterial.

A. To remove the key connection used in the Byers draft rigging and the American Continuous draft rigging would necessitate the removal of the American Continuous draft rods.

Q. 8. You have referred to the housing casting. What is the function of this device and what is its nature?

A. The housing casting is a design of casting to hold the draft rigging between either the draft timbers or draft sills of the car, at whichever point it might be applied.

Q. 9. Have you ever seen this construction in use and have you ever heard or have you any reason to believe that it has been used?

A. I have never seen any design of housing casting of this kind in service, and I hardly think same has ever been applied to equipment or used in any way.

Q. 10. Why in your opinion has it not come into use?

A. From a practical standpoint as a car builder, I would not consider a one-piece housing casting applied in the manner shown, as a satisfactory type of draft rigging, and it is quite evident that it would not give service.

Q. 11. Do you consider that draft gear one which can be easily and conveniently applied, and one which can be made and used at a cost which would recommend it for use?

Mr. Kerr: Objected to as grossly leading and as immaterial.

A. This type of draft gear might be applied, but it is quite evident that the cost of maintaining same would be excessive, which would prohibit its application.

35 Q. 12. Why would the cost be excessive?

A. Due to the method of fastening same to the draft timbers or sills and the design of the casting is certainly not of sufficient strength to answer this purpose.

Q. 13. How would it be changed to make it strong enough to resist the wear and stresses to which it would be subject?

Mr. Kerr: Objected to as immaterial and irrelevant.

A. The only way in my opinion, to make this type of gear in any way satisfactory, would be to cut same into three pieces eliminating the center piece and strengthening the two other pieces or cheek plates, similar to the heavier type of cheek castings now in use, or along the lines of the Emerick patent.

Q. 14. Where did the idea which you have just disclosed in connection with the Byers patent, originate?

Mr. Kerr: Objected to as there is no showing in the record that the witness has any information on the subject at all, and as immaterial.

A. From a personal examination of the patent drawings and my knowledge of the different types of cheek castings now in use.

Q. 15. Do you refer to the drawings of the Emerick patent?

Mr. Kerr: Objected to as leading and immaterial.

A. I may say of the Emerick and any other types of cheek castings.

Q. 16. I hand you herewith a copy of the Emerick patent, No. 693,643. Please examine this patent and tell what it shows.

Mr. Kerr: Reference to the Emerick patent is objected to as hav-

ing no proper foundation in the case, it being subsequent to the date of the Byers patent.

A. The Emerick patent handed me shows a twin spring type of draft gear with followers and yoke, the yoke being connected
36 to the butt of the coupler with a key, this type of gear having two cheek plates, the followers and springs being held in position by straps and bolts, its application being such as to allow the removal of either the draft gear or the draw-bar by removing the key, if it is the draw-bar, and the key and straps, if it is the draft gear.

Q. 17. I hand you a blue print annexed to the interrogatories filed by the plaintiffs. Please examine this blue print and compare it with the device disclosed in the Emerick patent.

Mr. Kerr: Objected to as immaterial and irrelevant, and as incompetent.

A. The blue print handed me shows a twin spring draft gear with followers and cheek castings, a key and draw-bar, substantially the same as the Emerick patent, the only difference being that the springs in the draft gear shown on the blue print are held in position by lugs on the followers, and held in position on the Emerick patent by bolts extending through the draft spring which was an old practice of not only holding the springs in position along with the tie plates, but also facilitated the application of the springs, the bolt being used to compress same.

Mr. Kerr: Answer objected to as incompetent.

Q. 18. Do you find the plates referred to in the embodiments shown in Figures 6 and 7 of the drawing?

Mr. Kerr: Objected to as leading.

A. No bolts are shown in Figures 6 and 7.

Q. 19. Do you consider these bolts an essential feature of the draft gear?

Mr. Kerr: Objected to as leading and incompetent.

A. It would depend entirely upon the amount of space around the draft spring, some types of construction being such as would necessitate the use of lugs or bolts to keep the springs in position, with other types, the same not being necessary.

Q. 20. Is it not perfectly feasible to use some other means to compress the springs to insert them in the yoke?

37 Mr. Kerr: Objected to as leading and incompetent.

A. Yes, a great many shops are equipped with devices for compressing the followers and springs to allow their easy application.

Q. 21. Is not that a perfectly feasible method of handling the followers in this patent without the bolts referred to?

Mr. Kerr: Same objection.

A. Both are used today.

Q. 22. Do you consider that the bolts in any way prevent the removal of the springs and followers from below?

Mr. Kerr: Same objection.

A. No; I would not consider that they would interfere, and my experience has been that they do not on either type of gears.

Q. 23. Are the constructions shown in Figures 4 and 7 interchangeable in this regard?

Mr. Kerr: Objected to as leading and incompetent.

A. Figure 4 shows a twin spring draft gear with bolts through the springs and followers. Figure 7 shows a tandem draft gear with no bolts. You could not apply a tandem gear in place of a twin spring, without some changes, or reverse it. I might add to that, that if you are referring to the application of the spring and two followers with or without the bolts, same is interchangeable. I did not quite get your question at first.

Q. 24. You have pointed out that the blue print shows independent cheek castings like those of the Emerick patent and is otherwise similar to the Emerick patent. Do you find it to be like the construction of the Byers patent which you have just examined?

Mr. Kerr: Objected to as incompetent and immaterial.

A. I would say there is no similarity between the Byers patent and the draft gear shown on the blue print attached to plaintiffs' interrogatories.

38 Q. 25. Do you mean in respect to the cheek plates and housing castings?

Mr. Kerr: Objected to as leading and incompetent.

A. Yes; in respect to a comparison of the two, one having a one-piece housing casting and the other having two cheek castings.

Q. 26. I hand you herewith a copy of the Simons patent, No. 627,540. Please examine this and describe briefly what it discloses.

Mr. Kerr: Objected to as immaterial and irrelevant.

A. The Simons patent shows a twin spring type of draft gear with yoke riveted to the coupler butt and springs and followers held in position by angles, the angles being held by bolts.

Q. 27. Are the springs and followers removable from this draft gear? If so, how and in what relation?

Mr. Kerr: Objected to as leading and immaterial.

A. By removing the bolts and angles, the followers and springs can be removed.

Q. 28. Give the reference character applied to the angles.

A. By removing the bolts 12 and angles 13, the followers 3 and springs 4 and 5 can be removed.

Q. 29. Have you ever seen a structure resembling this in use? If so, where and under what circumstances?

A. This design shows a twin spring draft gear with springs applied through the draft timbers or center sills, and I have seen equipment with the draft springs and followers extending through the center sills in a similar manner.

Mr. Kerr: Answer objected to as incompetent and immaterial.

Q. 30. Where did you see these, when and under what circumstances?

Mr. Kerr: Objected to as incompetent, immaterial and irrelevant.

39 A. The Seaboard Air Line Railway have a lot of steel hopper cars equipped with a twin spring draft gear in which the followers and springs extend through the center sills.

Q. 31. Are they removable after the manner of the springs and followers in this patent, or similarly?

Mr. Kerr: Same objection and as leading.

A. Yes.

Q. 32. In your opinion, is it necessary to disturb the draw-bar in order to remove the springs and followers in this way?

Mr. Kerr: Same objection.

A. It is unnecessary to disturb the draw-bar to remove the springs and followers from the Simons draft gear.

Q. 33. Have you had actual experience in connection with the cars you referred to as being equipped with a similar type of draft gear to the Simons?

Mr. Kerr: Same objection.

A. I have.

Q. 34. What is your experience?

Mr. Kerr: Objected to as incompetent and immaterial.

A. My experience covers from the time the cars were equipped over a period of several years in the maintenance of same.

Q. 35. In the cars you refer to, did the intermediate sills interfere with the removal of the springs and followers?

Mr. Kerr: Objected to as leading, incompetent and immaterial.

A. There were no intermediate sills in these cars.

Q. 36. Is that the common construction of steel underframe cars at present?

Mr. Kerr: Same objection.

A. It is.

40 Q. 37. How is the draft gear located on wooden cars in relation to the intermediate sills? Is it above or below or how?

A. The draft gear on wooden cars, in practically the majority of constructions, is located between the draft timbers which are located

under the center sills, the top of the draft timbers being generally on a line with the bottom edge of the intermediate sills.

Q. 38. Would there be anything to interfere in this construction with the removal of the springs and followers in a lateral direction?

Mr. Kerr: Objected to as leading, immaterial and irrelevant.

A. There would not.

Q. 39. I hand you a copy of the Frost patent, No. 532,272. Please note the type of draft gear disclosed and tell what it is.

Mr. Kerr: Objected to as immaterial and irrelevant.

A. This shows a spring draft gear with yoke and draw-bar in one piece and with an H-type of followers.

Q. 40. Do you call this a horizontal yoke and are the springs and followers removable from below independently of the draw-bar?

Mr. Kerr: Objected to as leading; calling for a conclusion and as immaterial and irrelevant.

A. While this drawing gives no dimensions of the followers, they were undoubtedly applied by putting same through the yoke and could be removed by removing the draft spring and turning the followers down horizontally and removing same.

Q. 41. You will note that on page 2 of the patent, lines 43 to 46, the specification reads: "The coupler is usually affixed to the car through the medium of clips 27 located at its draw-bar section, or any equivalent thereof may be used." Please examine the drawing, noting the clips 27, and state what would be a feasible equivalent for these clips.

41 Mr. Kerr: Objected to as leading, immaterial and irrelevant.

A. Inner stops as shown on the Emerick cheek plates, or any other type of cheek plate would take the place of the clips 27.

Q. 42. That is to say that the cheek plates referred to would be the full equivalent, according to the specification of the patent, of the clips referred to?

Mr. Kerr: Objected to as grossly leading, stating a conclusion desired to be arrived at by the witness, and as immaterial and irrelevant.

A. Yes.

Mr. Samuels: Direct examination closed.

Cross-examination by Mr. Kerr:

X Q. 1. Referring to the Emerick patent, is the design of the counterpart castings of the Emerick rigging and of the parts bolted to such counterpart casting of sufficient strength, without change in proportion, to resist the stresses to which such a construction would be subject if used in the manner shown in the blue print attached to plaintiffs' interrogatories?

A. The Emerick patent shows a type of draft gear patented in 1902, and the blue print shows substantially the same type of gear modified to suit the heavier or steel construction necessary with the present service. The Emerick patent shows the gear applied to wooden draft timbers or sills, while the drawing shows steel application.

X Q. 2. Well, is it your conclusion that the proportions shown in the Emerick structure as to its counterpart casting and the parts bolted thereto, would not stand up under the present day service requirements?

Mr. Samuels: The question is objected to as the drawing in the Emerick patent is evidently not made by scale.

42 Mr. Kerr: Exception is taken to the objection as being an attempt to coach the witness.

A. I would say that the Emerick patent drawing shows this type of gear designed for light capacity cars and was undoubtedly of sufficient strength for the purpose designed at that time, but with the heavy equipment in service today, re-designing of this gear along the lines of the blue print, which is substantially the same as the Emerick patent, would be necessary.

X Q. 3. Referring to the showing of the first five figures of the Emerick structure, have you ever taken out the followers and springs of a construction such as is shown in these figures?

A. While I have never removed a set of the Emerick gear, I have removed gears extending through the center sills or draft timbers, of similar construction applied in a manner as shown on the Emerick drawing.

X Q. 4. How would you take out the followers and springs in the constructions shown in Figure 4?

A. By removing the straps or plates 28 and taking the followers and springs out through the point from which the plate was removed.

X Q. 5. Would not the bolts 24 and 25 with their nuts thereon, prevent such removal in the manner prescribed by you?

A. This drawing is not sufficiently clear to denote if that would occur or not, but if it would, the key through the coupler butt could be removed, allowing same to drop down a little and the bolts could be removed extending through the followers.

X Q. 6. To drop the coupler butt down far enough so as to pull out both of the bolts 24 and 25, you would have to disengage the draw-bar from the carrier iron, would you not?

A. No; I hardly think so. The average space between the throat of the coupler and the carrier iron is sufficient to allow the butt of the coupler to drop down far enough to allow the removal

43 of these bolts, or the springs could be compressed by screwing the nuts up a sufficient distance to allow the springs, followers and bolts to come out intact.

X Q. 7. What about the end of the plate? Would you screw it up, too?

A. I might answer this in the same manner as your previous

question, that is, the drawing not being sufficiently clear to denote if this practice could be carried out or not.

X Q. 8. Is there any difficulty about taking out the springs and followers of the draft gear shown in the blue print attached to plaintiffs' interrogatories?

A. Yes; I would say that it would be equally difficult. My personal experience is that it requires considerable driving with a large sledge or hammer to get the followers and springs out.

X Q. 9. If the showing of Figure 4 of the drawing of the Emerick patent is correct, to drive out the followers and springs, it would take sufficient force to shear off the end of the bolt 24, would it not?

A. Unless same was removed.

X Q. 10. I hand you herewith defendant's Exhibit Model A, and ask you to state whether or not the parts of the Emerick structure corresponding to this are not comprised of a counterpart casting, either 10 or 11, and of flanges bolted respectively to the top and bottom edges of such counterpart casting.

A. I would say that the cheek casting Exhibit A handed me is similar to numbers of cheek castings in service and along the lines of the cheek casting shown in the Emerick patent, or in other words, substantially the same casting.

X Q. 11. Are you an expert in reading drawings?

A. I have had twenty-four years experience in working from drawings and going over drawings, showing different designs of draft gears, cars and other appliances.

44 X Q. 12. Is the yoke 15 supported between the counterpart castings 10 and 11 in the Emerick patent?

A. Figure 7 shows the yoke supported on the back end by the lugs of the cheek casting.

X Q. 13. How do you find it supported in Figures 1, 2, 3, 4 and 5?

A. Figure 5 shows a cross section and does not show the support; Figures 1, 2 and 3 show views that also do not show the yoke support; but Figure 4 shows the lugs similar to Figure 7.

X Q. 14. Please mark on this patent these lugs to which you refer. You mean the lugs or shoulders 31, is that correct?

A. I mean the lugs or shoulders on the cheek castings, not numbered on Figures 4 and 7.

X Q. 15. The specification refers to these as "the shoulder 31, see Figure 1, of the castings 10 and 11," does it not?

A. It would appear that this refers to the lugs or castings referred to by me, but same are not numbered 31 on Figures 4 and 7.

X Q. 16. In Figures 4 and 5 there is shown room for considerable play of the yoke between the lugs or shoulders, is there not?

A. Figures 4 and 5 show some play—how much, I am unable to determine with this drawing—while Figure 7 shows very little space, this being immaterial, as with proper compression of springs and followers and the aid of the key, the yoke would always stay in position.

X Q. 17. I do not find any longitudinal groove in the Emerick patent such as is shown in Defendant's Exhibit Model A, is that correct?

A. While there is no longitudinal groove between the lugs or stops shown on the Emerick plan, I would not consider this necessary except as a re-inforce for the lugs or stops, the lugs or
45 stops being a sufficient guide for the yoke at all times. The cheek plate, Exhibit A, is similar to a large number of cheek plates.

X Q. 18. What is there in the Emerick patent, as shown in Figure 5, to restrain the yoke and the followers from lateral movement except the vertical walls running the full height of the counterpart castings 10 and 11?

A. There does not appear on the Emerick patent, Figure 5, any guide for the yoke, nor does there appear any necessity for same, and while the dimensions of the followers and yoke are not given, the distance between the draft timbers or sills allowed in common practice, would only allow a very small clearance between the sides of the yoke and the sides of the cheek castings shown on the Emerick patent.

X Q. 19. The fact of the matter is that considerable clearance is shown in Figure 5, is that not correct?

A. I would say that there is not exceeding ⅜ of an inch, if this much, figuring on 9½-inch spacing of the center sills and draft timbers which is the practice on wooden cars.

X Q. 20. I have marked Figures 5 of the Emerick patent with two red lines. These two red lines show the amount of clearance between one of the counterpart castings and one of the followers, do they not?

A. These red lines show the space between the cheek casting and follower, but not between the cheek casting and yoke.

X Q. 21. I have now extended these lines to indicate the clearance between the cheek casting and yoke, is that not correct?

A. You have brought the red line down toward the yoke and around denoting the distance that there should be between the yoke and cheek casting.

X Q. 22. If the diameter of the springs in Figure 5 is 8 inches, approximately what would be the amount of this clearance between the yoke and the inner face of the casting 11? I have chosen
46 the dimension of 8 inches because that is the diameter of the spring shown in the blue print attached to plaintiffs' interrogatories.

A. I would say that in my previous answer giving the estimated distance between the yoke and the cheek casting, I referred to the Emerick patent, which undoubtedly shows a wooden underframe construction with center sills spaced 9½ inches, with 6¼ by 8-inch draft springs, 6½-inch followers and ⅞-inch yoke. The blue print submitted with the interrogatories shows steel construction with center sills spaced 12⅞ inches, cheek castings riveted to the inside of the sills and with 8-inch springs and a 1-inch yoke. I do not believe the springs shown in Figure 5 are 8 inches in diameter.

X Q. 23. I did not ask you for your opinion as to the diameter of the springs; I asked you to assume that the springs were 8 inches in diameter and with the construction of Figure 5 before you to tell

how much clearance there would be between the yoke and the counterpart casting 11?

A. While there are no dimensions given on the Emerick patent, it does not appear that 8-inch draft springs could be applied without respacing the center sills or draft timbers, or I might add that at the time that the Emerick patent was obtained, there were no 8-inch draft springs in use.

X Q. 24. The answer is objected to as evasive and the question is repeated.

A. I cannot give you the clearance, because you cannot really get an 8-inch spring in there. I can figure out the clearance of a 12⅞-inch spring. As to the construction in Figure 5, to put an 8-inch spring there would cover half your draft timbers.

Mr. Kerr: The attention of the court is called to the fact that the witness has three times refused to answer the question.

X Q. 25. I have asked you a perfectly plain and simple question. I am not talking to you about standard distances between draft sills or anything of the sort. Obviously no dimensions are given
47 in the Emerick patent, and I have asked you to take as a base a spring having an external diameter of 8 inches, and have assumed that you would understand that I mean one of the springs 26 shown in Figure 5, and with the dimension of this spring given as a basis, I have asked you to calculate from the dimensions given in this drawing, what clearance there would be between the side casting 11 and the yoke.

A. I would say that the question asked is not practical and it is not possible to use any such construction.

X Q. 26. You mean that you refuse to measure up and find out what the distance would be?

A. I cannot measure it on the Emerick patent. I do not refuse to answer any question that I possibly can, but there is no answer to the question which you are asking referring to Figure 5 of the Emerick patent, but referring to the blue print showing an 8-inch draft spring with one-inch yoke, making ten inches, and assuming the thickness of the cheek casting, there is very little space between the yoke and cheek castings.

Mr. Kerr: Attention of the court is called to the fact that the witness has repeatedly refused to answer the question which called for a mere calculation of the dimensions given, in Figure 5 of the Emerick patent.

Mr. Samuels: Attention is also called to the fact that the witness has answered the question as he understands it and to the best of his ability, and he does not consider the inquiry properly applicable to the Emerick patent which is not drawn to scale and relates to a different dimension of spring than that given.

Mr. Kerr: The exception taken to the statement of counsel is not being evidenced.

Mr. Samuels: Objection is made to the question on the ground that the Emerick patent drawing is clearly not made to scale.

48 X Q. 27. Referring to questions 24 and 25 and your answer, do you mean there is no further similarity between the blue print atached to plaintiffs' interrogatories and the Byers' patent?

(Questions 24 and 25 are read to the witness).

Mr. Samuels: The question is objected to as misleading because it refers to a similarity, while the answer cites a dissimilarity between the Byers patent and the structure of the blue print annexed to the interrogatories.

A. The cross-section on the blue print shows a cut through the cheek casting, but I am unable to determine if this is at the point where the lugs or stops are or not. If through the lugs or stops, it shows an opening or groove for the yoke similar to cheek casting A. exhibited, but if this cut is through the center of the cheek casting, it shows a groove similar to the Byers patent.

X Q. 28. Is there any similarity between the spacer block B and the blue print attached to plaintiffs' interrogatories, and the spacer block shown in Figure 9 of the Byers patent and shown in position in Figure 12 of the Byers patent?

A. These spacer blocks do not appear to be of the same design although to all appearances, designed for the same purpose, and to answer the purpose of other spacer blocks in use. The Byers spacer block, Figure 12, shows an open end in place of the closed end on the spacer block shown on the blue print submitted.

X Q. 29. You state that the Sea Board Air Line has a lot of hopper cars equipped with draft gear of such constructions as shown in the Simons patent. By whom were these made?

A. As I remember, I stated "of similar construction." I think this was termed a "Street Twin Spring Draft Gear" and I am not familiar with from whom purchased.

49 X Q. 30. In what particular did these riggings differ from the Simons patent, as you remember them?

A. As I remember, in place of wrought iron followers, the Street gear referred to had malleable iron followers which extended through the center sills and I do not remember exactly the plan of application.

X Q. 31. I understand you to have said that Figure 7 of the Emerick patent showed a tandem spring rigging. Please examine this and state whether this is so.

A. It is my impression that this is a tandem spring rigging.

X Q. 32. You mean in the sense that the buffing or draft shocks are taken up in succession by the rigging?

A. I mean that it performs the same service of a tandem rigging now in service, giving the service of two springs, one located in the rear and the other with followers and stops between, numbers of such gear being in service.

X Q. 33. Am I correct in understanding that in modern tandem spring riggings, each spring is compressed independently of the other?

A. In modern tandem spring riggings you get the benefit of a

capacity of two springs against one spring in single spring riggings.

X Q. 34. You have not answered my question.

A. In modern tandem spring riggings, you get the capacity of the first spring and then of the second spring, or in other words, the full capacity of the two springs when the draft springs are closed.

Mr. Kerr: Cross-examination closed.

Redirect examination by Mr. Samuels:

R. D. Q. 1. Referring to the Emerick patent, Figures 5 and 7, you will please state whether either set of springs and followers in Figure 7 could be removed in the relation in which they are
50 shown and inserted in Figure 4 in place of the springs and followers which appear in that figure?

Mr. Kerr: Objected to as immaterial.

A. If the followers in Figure 7 are of sufficient length, the springs and followers could be interchanged to Figure 4.

R. D. Q. 2. You will note that the question eliminated consideration of dimensions. Consider the followers as of the same size in the two figures.

Mr. Kerr: Objected to as not proper re-direct examination.

A. They could be interchanged.

R. D. Q. 3. Referring to Figure 4 of the Emerick patent, do you find a grove or space 13 between the rear lugs 31?

Mr. Kerr: Objected to as grossly leading, counsel apparently trying to put words in the witness' mouth; also as improper re-direct examination.

A. There is a space between the lugs or stops for the yoke to work.

R. D. Q. 4. How would you term these stops?

A. Numeral 13 denotes an opening between the lugs or stops.

R. D. Q. 5. What would you call this opening? Is it a grove or way, or what?

Mr. Kerr: Attention of the court is called to the continuing leading character of the questions. Objection is also made on the ground that it is not proper re-direct examination.

A. The print is not very clear as to what it is, but it shows a space for the yoke to travel in. Referring to Figure 5, the print is more clear and shows this to be a groove.

Mr. Kerr: Counsel for defendant indicates in Figure 5 for the witness' benefit, the space between the shoulders 31.

Mr. Samuels: Re-direct examination closed.

51 Recross-examination by Mr. Kerr:

R. X Q. 1. You have been asked to disregard dimensions in referring to Figures 4 and 7 of the Emerick patent. I will ask you to

disregard dimensions in referring to the Byers patent, and state whether or not a key of the form shown in Figure 10, cannot be readily applied to Figures 6 and 7 of the Byers patent.

Mr. Samuels: Objected to as improper re-cross examination.

A. I would say that the key 17, as shown in the application of the American Continuous and Byers draft gear, could not be applied in place of key 11, without cutting same off to the required length and riveting the ends over.

R. X Q. 2. Why could it not be secured with a cotterpin, as it is intended to be secured in Figure 10?

A. This could be done for temporary relief, but would allow the yoke to spread and would not be good construction.

R. X Q. 3. Why would it allow the yoke to spread any more than the Emerick yoke spreads?

A. The Emerick yoke is on a straight line and the sills or draft timbers prevent the spreading of same, while the Byers yoke is not on a line and can spread.

R. X Q. 4. Is that the only thing that prevents the Emerick yoke from spreading—that it is on a line?

A. I stated that its being on a line, the sills or draft timbers would prevent it from opening up.

R. X Q. 5. Do you mean the draft timbers would prevent it from opening up if it were close enough?

A. I assume that they are close enough, referring to the Emerick drawing.

Mr. Samuels: All of the questions thus far submitted as re-cross examination are objected to as wholly outside the scope of the re-direct examination, and therefore improper.

Mr. Kerr: Re-cross examination closed.

Depositions closed.

Adjourned subject to notice.

52 In the United States District Court, District of Maine.

In Equity. No. 705.

THE NATIONAL MALLEABLE CASTINGS COMPANY and JACOB J. BYERS, Plaintiffs,

vs.

THE T. H. SYMINGTON COMPANY, Defendant.

Testimony introduced in behalf of defendant in the above entitled cause before Martha A. Shelton, a Notary Public in and for the City of St. Louis and State of Missouri, at the office of Messrs. Carr & Carr, 510 Pine Street, St. Louis, Missouri, pursuant to the attached notice, commencing at nine o'clock A. M., November 19, 1914.

Present:

George I. Haight, for plaintiffs.
Edwin F. Samuels, for defendant.

W. SCOTT WRIGHT, a witness produced on behalf of the defendant, first being duly sworn, testified in answer to questions propounded to him by counsel as follows:

Direct examination by Mr. Samuels:

Q. 1. Please state your name, age, residence and occupation.
Wright, W. S.; age 52; general car foreman, East St. Louis Suburban Railroad, East St. Louis.
53 Q. 2. How long have you been in your present position.
A. About 13 years.
Q. 3. What was your previous employment?
A. Car foreman, Commerce Despatch Line.
Q. 4. How long were you employed by the Commerce Despatch Line?
A. About 3 years, between 3 and 4.
Q. 5. Give as near as you can the date on which you entered the employment of the Commerce Despatch Line.
A. It was about in March or April of 1899.
Q. 6. Where was this concern located.
A. Well it was located in Hegewisch, Illinois, but it was in Chicago. Hegewisch is a part of Chicago.
Q. 7. When you were employed by the Commerce Despatch Line did you know one William H. Emerick?
A. I did.
Q. 8. What was your association with Emerick?
A. I was assistant under him.
Q. 9. Assistant under him. What was his position.
A. Master mechanic of the Commerce Despatch Line.

Q. 10. Were you his assistant during the entire term of your employment? Relate the circumstances.

A. I was as long as he was there. But he left before I did.

Q. 11. When did he leave?

A. In 1901 I believe, along the summer of 1901, I think—it was about three years.

Q. 12. You said you were assistant master mechanic. What were yor duties?

A. I had charge of the work in the yard—repair work.

Q. 13. With what types of mechanism did you deal?

A. You mean the cars?

Q. 14. I mean mechanism involved in car construction.

54 A. Well, they were box cars, and part of the construction was the American Continuous draft rigging.

Q. 15. Did Mr. Emerick ever disclose to you any invention of his during your association with him?

A. He did.

Q. 16. What was it?

A. In our conversation on the cars that we were repairing he mentioned that he had a draft gear in mind that would improve the one we were working on.

Q. 17. Why do you remember it?

A. Well, more distinctly on account of the trouble we had with the cars we were repairing.

Q. 18. What were the troubles with the repairing?

A. The troubles that we had were the American Continuous rod, which at that time was a very hard part to keep in repair.

Q. 19. What were the troubles to which you refer in the way of the rod?

A. We had a great deal of trouble on account of the rod stretching and allowing the spring to become loose and damaging the dead wood and draft timbers.

Q. 20. How were the draft timbers affected?

A. By the rods getting too long and tearing the front—splitting them out in the front.

Q. 21. What was it that tore the front of the draft timber?

A. The cross key that held the rod.

Q. 22. Can't you make that answer a little fuller?

A. Well, the cross key that held the rods passed through the draft timbers and the coupling. The cross key connected the A C rods and the couplers; the A C rods became stretched and in that manner split out the front end of the draft timbers.

Q. 23. What was it that tore or split the front end of the draft timbers?

A. The cross key that held the continuous rod.

Q. 24. What was Mr. Emerick's invention?

A. It was a draft rigging, doing away with the A C rod

55 and using a pocket and a yoke or yoke attachment.

Q. 25. What kind of a yoke, how placed?

A. Horizontal yoke.

Q. 26. What do you mean by pocket?

A. A coupler attached to the yoke I call a pocket.

Q. 27. The word "pocket" then has no reference to the cheek plate?

A. Not in my answer.

Q. 28. You merely mean the space inclosed by the yoke and the end of the coupler?

A. Any attachment that has a yoke to it I call a pocket attachment.

Q. 29. What other features did the Emerick device embody.

A. Well, it consisted of springs and followers and the cheek plates.

Q. 30. How many cheek plates?

A. Two.

Q. 31. How were they placed?

A. They were placed on the draft timber.

Q. 32. Were they separate castings or single castings?

A. They were single castings?

Q. 33. One or two single castings?

A. Well there would be two single castings—two cheek irons.

Q. 34. Can you make a sketch showing one of these?

A. Why, I think I could, yes. It would be very rough. You mean a cheek iron?

Q. 35. Yes, one cheek iron.

Mr. Wright's sketch marked Defendant's Exhibit A for identification is now offered in evidence.

Mr. Haight: Objected to as incompetent and immaterial, and no connection shown between the structure illustrated by the sketch and any matter in issue in this cause.

56 Q. 36. How were these cheek irons placed?

A. Well, they were—one on each side of the draft timber—one on each timber.

Q. 37. How was the yoke situated?

A. Horizontally.

Q. 38. And in relation to the cheek plate?

A. It passed into a slot on the cheek plate.

Q. 39. Take this sketch and mark the slot to which you refer with number 1.

Q. 40. What other features do you remember as important parts of the cheek plate?

A. Well, the lugs that—the slots would cut the lugs in two front and back and you could take your springs and followers out without taking down your coupler.

Q. 41. What do you mean by coupler?

A. Well, I mean by the coupler the attachment that you coupl the cars together with.

Q. 42. What other name do you give it?

A. At that time it was called a drawhead because it was used with a link and pin.

Q. 43. Referring to the sketch, in one of your recent answers you mentioned lug. Please mark this lug on your sketch number 2.

(Witness marked sketch.)

A. Well I have marked them.

Q, 44. You have stated in a previous answer that certain parts of the draft gear could be taken down without removing the draw-head, draw-bar or coupler, using these as synonymous terms. How were these parts supported, how were they removed, and what were they?

A. They were supported in the cheek plates by pocket straps, one on each side, or each lug, I should say I guess. They were removed by taking down the two straps at the bottom, which allowed the followers and springs to be taken down without removing the draw-head.

57 Q. 45. Then the parts taken out were the followers and springs?

A. Yes, that's what I mean.

Q. 46. How many of these straps were they?

A. Two.

Q. 47. How were they placed?

A. On the bottom of the lug—fastened to the lugs.

Q. 48. Did these serve any different purpose than a single plate covering the bottom of the draft gear?

A. No, sir, only in the matter of economy.

Mr. Haight: I intended to object to the question asked, but the answer was written down before the objection was made. I therefore make the objection at this time and move to strike out the answer on the ground that the question calls for an opinion that is not relevant and in any event relevancy has not been shown and it is incompetent and immaterial.

Q. 49. How were these two straps secured to the bottoms of the lugs different from a single plate?

Mr. Haight: Same objection.

A. There wouldn't be any difference only one would be a strap and one would be a plate. They would both be secured by bolts.

Q. 50. Merely a plate cut in two?

Mr. Haight: Same objection.

A. Why you could cut it in two, yes, if you saw fit.

Q. 51. And if you did this would you have two straps?

Mr. Haight: Same objection.

A. Yes, sir, you would have two straps.

Q. 52. You have stated that Emerick's draft gear included two cheek plates each having lugs shown in your sketch as one at each corner, with a horizontal slot between the lugs a horizontal yoke, seated in the slots, and a draw-bar to which the yoke was secured. How was the yoke secured to the draw-bar?

A. By a cross key passing through the draft timbers and the ends of the yoke.

58 Q. 53. How were the ends of the key situated?

A. They were situated in the draft timbers.

Q. 54. Were they—how were they related to the draft timber and in what manner were they received by the draft timber?

A. They passed through a slot in the draft timber is about the only way I can explain it.

Q. 55. What kind of slot?

A. Well, I might say it is an elongated slot.

Q. 56. How did Mr. Emerick make this disclosure to you?

A. Well, from our talk on the troubles that we were having with the cars that we were keeping up. We talked on the cars that we kept up and the extra work it took to keep them up which brought about this remark that he had this device or plan whatever you might call it.

Q. 57. With what draft gear were you dealing when you experienced the difficulties referred to?

A. It was the American Continuous draft rigging.

Q. 58. How did Mr. Emerick make you acquainted with his invention?

A. By talking about it and making sketches on paper, showing his ideas.

Q. 59. Were any of these sketches preserved?

A. I think not.

Q. 60. Did he ever show you a model?

A. He did, at one time.

Q. 61. Was this on the occasion of the first or a later conversation on this point?

A. It was after we had talked about it several times that he showed me the model.

Q. 62. Did you understand the device fully from these conversations?

A. I think so, yes, sir.

Q. 63. Are you positive that you understood it?

A. Why, yes sir.

59 Q. 64. Is there any question in your mind on this pont?

A. Why, no sir.

Q. 65. Are you thoroughly familiar with draft gears? Over how long a period has your experience with such mechanism extended?

A. Twenty-five years or more.

Q. 66. Was your comprehension of Mr. Emerick's device at the time sufficient to enable you to construct his draft gear and apply it to a car.

Mr. Haight: Objected to as calling for an opinion and a conclusion.

A. As a car man I think I could.

Q. 67. Then you consider that your knowledge of the structure was full and complete or the contrary?

A. Well, it was complete enough to understand it.

Q. 68. What kind of a model was this you say that he showed you? Was it fully illustrative?

Mr. Haight: Objected to as calling for a conclusion, improper, and not the proper way to prove either the existence of a model or what it was.

A. The model that he showed me was small but complete enough for a man to understand. It was rough.

Q. 69. Was it of wood, or metal?

A. Mostly wood. Parts were cut out probably with a knife, most of it was made with a knife.

Q. 70. Where were you when he showed you this model?

A. We were in the office at the shop.

Q. 71. Whose office was this? Who occupied it?

A. It was the office of the Commerce Despatch Line and occupied by Mr. Emerick.

Q. 72. You have said that you first went with the Commerce Despatch Line in March or April of 1899. When did he show you the model?

Mr. Haight: Objected to as leading and suggestive.

A. During the summer of 1899.

60 Q. 73. And when, as near as you can tell, did the conversation on this subject take place?

A. Well, it's—I couldn't give you the date or the exact time. I know that it was in the summer because it was shortly after I went to work for them.

Q. 74. Where did these conversations take place?

A. In the office and in the yards of the company.

Q. 75. Do you know of any memoranda or writing which would enable you to fix the dates you have given?

A. Nothing, only that at the time I went there—I went there in the spring, and I believe memorandums or books that I established the dates by before.

Q. 76. What do you call these books?

A. Time books and memorandum books. One piece work book I believe.

Q. 77. In what connection were these books kept?

A. In connection with the work of the Commerce Despatch Line.

Q. 78. When did you last see them?

A. The last time I saw the time books was in February of 1914.

Q. 79. What was the nature of the entries in these books and who made them?

A. The time books, the entries were the men's names and the hours that they worked. Mr. Emerick—they were in Mr. Emerick's handwriting.

Q. 80. How did these books happen to be preserved?

A. They were kept in a desk we had in the office and at the time we closed out there the desk was taken to my house, and I used it there for a month or two in the company's business. When we

moved from Chicago to East St. Louis the desk was shipped to East St. Louis with my household goods.

Q. 81. How did you hapepn to move to East St. Louis and how did you happen to take the desk to your house?

A. I stated before that the desk was taken to the house on account of closing out the work there—I moved the desk home as I
61 had no place else to put it, and I moved to St. Louis because I was employed there.

Q. 82. How did all these papers and books happen to be preserved in the desk and taken to East St. Louis?

A. They were left in the desk when we moved I wasn't there and my wife didn't know what to do with the desk and she locked it up and sent it all to East St. Louis—papers and all.

Q. 83. Did you use the desk after you went to East St. Louis?

A. I used it some, yes sir.

Q. 84. How did it happen that you didn't throw these papers and books away?

A. For one reason the desk—the parts that the books was in was locked up generally, and another reason is that I never destroy a time book.

Q. 85. When did you first take these books out after you moved to East St. Louis?

A. That would be pretty hard to answer. Well I might have moved them around in the desk and taken them out. I had no reason to use them. About January, 1914, I took them out of the desk.

Q. 86. How did you happen to do it then?

A. By your coming and asking for information and we went through the old desk and I showed you the time books and gave them to you—delivered them to you.

Q. 87. Did you examine them at that time?

A. I did, yes sir.

Q. 88. Have you ever testified in regard to these facts before?

A. Yes sir. In Chicago, in February of this year, 1914.

Q. 89. Who were the parties to the litigation?

A. I believe that it was the Symington Company, I believe it was against Mr. Miner, whether it was Miner & Co. I don't know.

Q. 90. What were Mr. Miner's initials?

62 A. W. H.

Q. 91. What was the nature of that suit? Did it relate to a patent or what subject?

A. All I know is that it was in regard to draft rigging—that is as far as I know.

Q. 91. What draft rigging?

Mr. Haight: I object, as immaterial, as incompetent, as not the best evidence, and calling for facts that can be proven only by the record itself.

A. Well, I wouldn't—couldn't answer that, I don't think. Well,

from the parties that were there and the evidence, that is all that I could tell, it was Mr. Emerick's.

(Adjourned until 3.00 o'clock P. M.)

(Met, pursuant to adjournment, at 9.00 A. M., November 20, 1914).

Direct examination continued:

Q. 92. Mr. Wright, you have made continued reference to certain—I should say continued and repeated reference—in your testimony to certain memoranda which you examined some months ago and which helped you in fixing some of the dates which you have given. Please examine the account books which I hand you herewith and tell what they are.

A. (Handing him account book marked Exhibit C, for identification).

Mr. Haight: Objected to on the ground that the said book if admissible, are themselves the best evidence of what they are.

A. This book shows piece work, record of the Commerce Despatch Line of 1899.

Q. 93. Examine this book, marked Defendant's Exhibit E, for identification, and tell what is is.

Mr. Haight: Same objection.

A. This book is a time book of day workers of the Com-
63 merce Despatch Line marked—the first entry is marked April the first, 1899.

Q. 94. What does this indicate to you?

Mr. Haight: Same objection.

A. Well, it indicates that at that time the Commerce Despatch Line was doing business at Hegewisch. This book shows the names of the men and the time employed.

Q. 95. Does it tell you anything in regard to the date on which you were first employed in the shops of the Commerce Despatch Line at Hegewisch?

Mr. Haight: Objected to as incompetent, irrelevant and immaterial, as hearsay and not the best evidence.

A. It shows the time of my first employment as April the first, 1899. Also the other names of men who were employed at the same time.

Q. 96. Do you recognize the handwriting in which these entries are made; if so, tell whose it is.

A. The handwriting is W. H. Emerick's.

Q. 97. Why were these entries made?

Mr. Haight: Objected to as incompetent and immaterial.

A. They were made to keep the time of the men.

Q. 98. Were they a regular incident of Mr. Emerick's employment?

A. I don't quite understand the question you ask.

Q. 99. Is there any other handwriting in the book besides Mr. Emerick's?

A. No sir, not in this one.

Q. 100. Read the entry in this book Defendant's Exhibit E for identification to which you have referred as showing the date of your employment on the first of April, 1899, starting at the tops of the pages.

A. "Pay Roll No. 2, commencing Monday, the 4th, first half of April, 1899. W. S. Wright 4/3, 5 hours; 4/4, 10 hours; 4/5, 10 hours; 4/6, 10 hours; 4/7, 10 hours; 4/8, 10 hours. John Ecklend, 4/3, 5 hours; 4/4, 10 hours; etc. W. A. Garrett, 4/3, 10
64 hours; 4/4, nothing; 4/5, 10 hours. N. Nelson, 4/3, 10 hours; 4/4, 10 hours; 4/4, 10 hours; 4/5, 10 hours.

Mr. Samuels: That is sufficient to identify the entry, Mr. Wright.

Q. 101. In whose writing is this?

A. W. H. Emerick's.

Q. 102. Does your name appear on the subsequent pages of the book, and if so, how?

A. It does, yes sir.

Q. 103. Are the subsequent entries for the same purpose and of substantially the same nature?

A. Yes, sir.

(Time book marked Exhibit E for identification is introduced as Defendant's Exhibit E, to be so marked).

Mr. Haight: The offer is objected to on the ground that it is incompetent, irrelevant and immaterial, that there has been no proper identification of the book offered, no proper foundation has been laid, and the same is pure hearsay.

Q. 104. I hand you Defendant's Exhibit C for identification. Please examine it, tell what it is and in whose handwriting the entries are made.

Mr. Haight: Objected to as incompetent and immaterial and not the best evidence.

A. It's a piece work time book of the Commerce Despatch Line, and up to July, 1900, it shows Mr. Emerick's writing. The balance of the book the entries are made in my own handwriting.

Q. 105. Any question in your mind as to the identity of the handwriting which you describe as Mr. Emerick's?

Mr. Haight: Objected to as incompetent and immaterial.

Q. 106. And have you seen much of his writing?

Mr. Haight: Same objection.

A. I am positive that the entries are in his handwriting in the

fore part of the book. Yes, I would say that I have seen much of his writing.

65 Q. 107. In what connection?

A. Well, in a business way, also in personal letters.

Q. 108. You have referred to an entry by Mr. Emerick in July, 1900. Does this mean anything in particular to you?

A. Well, it shows the last entry that he made in this book, in July, 1900.

Q. 109. Why, in your opinion, are there no more entries in his writing in that book?

Mr. Haight: Objected to as calling for a conclusion and for an opinion and also for an opinion upon a matter that is irrelevant and immaterial.

A. It shows to me that he left the company at that time.

Q. 110. You have in your past testimony referred to certain difficulties which you experienced with the American Continuous draft gear early in the period of your employment with the Commerce Despatch Line. Tell whether there are any entries in these books which tend to fix the date when you were first engaged in the repair of the American Continuous draft gear.

A. Well, this book, Exhibit E, shows the time that we started the repairs of these cars, that was the time that I was having the trouble with the American Continuous draft gear, in the first half of April, '99.

Q. 111. Tell exactly how you deduced this from the entry referred to.

A. The first half of April shows part of the men's time marked with a small "c," showing the men that worked each day on the car repairs.

Q. 112. What was the nature of the repairs which were being made in the hours the record of which is marked with the small "c" to which you refer?

A. The nature of the repairs was general overhauling of cars equipped with American Continuous draft gear.

66 Q. 113. Was or was not a considerable part of this work the overhauling of the draft gear?

A. The major part of it was the draft gear and draft timbers.

Q. 114. With these entries and their significance as just related in mind, tell when Mr. Emerick first disclosed his draft gear which you have previously discussed in this testimony, to you.

A. He spoke of it and talked of it almost as soon as we started on these repairs, and at one time showed me a model.

Q. 115. Did you examine this model fully so as to understand and remember it?

A. Yes, sir, the general principle and outline of it, yes.

Q. 116. When was this?

A. It was at the time we were having the trouble in getting started on these repairs, in May was when we were having the worst trouble, and it was that time we talked of it more so than any other time.

Q. 117. When was the invention fully disclosed to you and the model shown you as you have related?

Mr. Haight: Objected to as calling for a conclusion.

A. I couldn't give the exact date today, but would say it was in the month of May.

Q. 118. You have placed these troubles with the American continuous draft gear as in April and your conversations with Mr. Emerick referring to his draft gear as taking place, the first of them, at almost the beginning of these difficulties. Did any considerable period elapse before he showed you the model?

Mr. Haight: Objected to as argumentative, as leading and suggestive, and as evident design to lead the witness to an answer, and also objected to in that it assumes a condition of the record that does not exist.

A. Well, it was no great time, no. By referring to Exhibit E, if you will allow me to explain, the (April 11) time book shows
67 in the first half of April, '99, it was on the 4/11 Tom Watkins started to work as a blacksmith and his principal work at that time was on the American Continuous draft gear, and it took Mr. Emerick and myself a good deal of time to get him straightened out on his work, you might say causing us to talk draft rigging considerably.

Q. 119. Did Mr. Emerick disclose his invention at this time and were these conversations immediately after the employment of the man referred to?

Mr. Haight: Objected to as grossly leading.

A. He did talk at this time and other times.

Q. 120. Were these conversations or were they not sufficient to enable you to identify the draft gear Mr. Emerick was discussing as the one of the model and verbal disclosure which you describe in your testimony of yesterday?

Mr. Haight: Objected to as immaterial, as calling for the conclusion of the witness, and in assuming that the witness has testified to a verbal disclosure.

A. I think his disclosures were sufficient for a man in the car business to understand. Well, he explained it so that I would know the parts, if they were shown to me, yes.

Q. 121. Was it the same or a different invention?

Mr. Haight: Objected to as calling for the conclusion of the witness.

A. It was the same invention that I have been talking of.

Q. 122. Have you any interest in this case or rather in the Symington Company?

A. No.

Q. 123. At the time referred to were you familiar with the tandem

as well as the twin spring and single spring draft gear? Of the various types in use? Not referring now to the Emerick invention.

A. I was fairly familiar with them yes; more so with the single spring than the twin spring or the tandem, from the fact
68 there was a great many more single springs in use at that time than of the other kinds.

Q. 124. As a draft gear man or a car man, would you consider it anything more than an ordinary, everyday proposition for a draft gear engineer having a tandem or a single spring or a twin spring draft gear of any particular type as the Miner or the Emerick, to produce a corresponding draft gear, that is to design a tandem from a twin or single spring or vice versa?

Mr. Haight: Objected to as incompetent, irrelevant and immaterial, as calling for an opinion, and on the further ground that no proper foundation has been laid, that the qualifications of the witness have not been shown, to give the opinion asked, and furthermore that the question calls for an opinion upon a matter of law.

A. It could be readily done by a man that understood his business, and if you will allow me to say what I have seen done with the Miner tandem draft gear on an ordinary rip track in the way of changes, I have seen the Miner tandem changed.

Mr. Haight: Before the witness proceeds further, we object to the recital which witness is commencing as not responsive to the question and as evidently relating to some matter not competent, material or relevant to the inquiry in this cause.

A. I have seen it changed from a tandem to a single spring pocket attachment, also to what is called a tail pin or stem attachment, and it was done without changing the shape or the form at all.

Mr. Haight: We shall move to strike out the answers to this upon the grounds given in our previous objections to the questions and to the witness' recital.

Q. 125. How was it done?

Mr. Haight: Objected to for the reasons given in the two previous objections.

A. It was done by simply changing the yoke or pocket from a tandem to a single yoke to make a single spring, or do away
69 with the yoke entirely to make it a tail pin attachment, with two followers and one spring in each case.

Q. 126. Then in connection with Emerick's invention would you consider the question of tandem or twin spring of any particular importance? That is, what impression would it make on you.

Mr. Haight: The same objection as those made to this entire line of inquiry heretofore.

A. It would only be a matter of changing the shapes to either make it twin or tandem.

Q. 127. What do you mean by shapes?
A. The shape of your pocket or your lug iron or lug, cheek plates.
Q. 128. How change the shapes? Do you mean lengthen them out, or shorten them or what?

Mr. Haight: Objected to on all the grounds heretofore given and the additional ground that it is leading.

A. It would only be a matter of lengthening or shortening to make a tandem or twin spring, allowing for your spacing.
Q. 129. How about the number of followers?

Mr. Haight: Same objections.

A. Well, it would be a matter of adding or taking away as to the followers.
Q. 130. Did Mr. Emerick say anything to you about making an application for patent at the time—or about the time—of these disclosures?
A. He did.
Q. 131. What did he say?

Mr. Haight: Objected to as immaterial.

A. He mentioned the fact that as soon as he could get money enough to push it through he intended to get a patent.

Mr. Haight: Move that the answer be stricken out as immaterial and hearsay.
Mr. Samuels: The evidence is offered as part of the res gestae.

70 Q. 132. Have you any idea what became of the model you have described?
A. No sir.
Q. 133. Have you ever been asked to account for it before?
A. I have been asked if I knew what went with it—or what became of it.
Q. 134. In your search of the old desk of the Commerce Despatch Line would you have discovered it if it had been there?
A. I think so.

(Exhibit C, for identification, is now offered as Defendant's Exhibit C, and the Notary is requested to so mark it.)

Mr. Haight: The offer is objected to on the ground that the offered matter is immaterial, incompetent, irrelevant, hearsay, no proper foundation has been laid, it has not been identified in the proper manner, and is not the best evidence.

Direct examination closed.

Cross-examination by Mr. Haight:

X Q. 135. Mr. Wright, what was the business of the Commerce Despatch Company during the time you were employed by it?
A. The business was running car repair shop.

X Q. 136. And for whom did they repair cars?

A. For the Commerce Despatch Line.

X.Q. 137. The cars that were repaired by the Commerce Despatch Line at their shops in Hegewisch, Ill., were their own cars only. Is that right?

A. Yes, sir.

X Q. 138. About how many cars did this company operate during the time of your employment with them?

A. About 3,000 I believe.

71 X.Q. 139. About what percentage of those cars were equipped with American continuous draft gear?

Mr. Samuels: Question objected to as indefinite as the equipment must have been changed from time, and counsel has not stated the time to which he refers.

Mr. Haight: We referred to the entire time of the witness' employment with the company.

A. I would judge about half.

X.Q. 140. Did you have trouble with the American continuous draft gear during the entire time of your employment there?

A. More or less, yes.

X.Q. 141. Now, referring to Defendant's Exhibit E, the Time Book, do I understand that the small letter "c" is placed over the number of hours credited to each man on particular dates when that man worked upon cars in repairing the same?

A. Well, I would answer, in April that it did.

X.Q. 142. How about May?

A. May is marked different in the book.

X.Q. 143. What marks do you find in the Time Book for the month of May that indicate that men worked on repairing cars, if any?

A. For the month of May it shows that the time is marked piece work and day work on the cars.

X.Q. 144. Are there any similar marks for the month of June, 1899, in that book?

A. No, sir.

X.Q. 145. Are there any similar marks for any of the other months appearing in that book ending with May, 1900?

A. I think not.

X.Q. 146. You did not place the small "c" in this book that appears on the pages marked in ink "Pay Roll No. 2, commencing Monday 4th, first half April, 1899," did you?

A. I think not.

72 X Q. 147. Do you know of your own knowledge when they were placed there?

A. Yes.

X Q. 148. Do you know by any facts outside of what appears in this book itself when they were placed there?

A. Only by seeing some of them placed there.

X Q. 149. That "c" means, as I understand you, that the men

over whose time it appears worked in repairing cars, but it does not indicate what kind of repairing upon cars they were doing. Is that right?

A. That's correct. It's correct as to anyone who does not understand it.

X Q. 150. Well, is it correct as to one who does understand it?

A. I think so.

X Q. 151. You had troubles with American continuous draft gear in April, 1900, did you not?

A. Yes sir, I have so answered before.

X Q. 152. There is nothing in this book, is there, Mr. Wright, that tells you anything except that you worked for the Commerce Despatch Line on those days and during the time that you were credited as appears in this book? Is that right?

A. No, sir.

X Q. 153. What more does it tell you?

A. By taking the book, it shows that—it tells me that the time I started on this work, being my first experience with that class of cars meaning American continuous draft rod cars.

X Q. 154. You mean by that, do you not, that during the entire time you worked for the Commerce Despatch Line as shown by this book, Defendant's Exhibit E, you did work in repairing American continuous draft gears. Is that correct?

A. I mean by that that the majority of the cars repaired were American continuous draft rod.

73 X.Q. 155. This book does not show you, does it, the particular days upon which you worked on American continuous draft gear?

A. It doesn't name the particular class of cars, but it does show by the cost of repairs shown at the bottom of the pages to anyone familiar with the book.

X Q. 156. Will you then turn to the record for the month of July, 1899, and point out what, if anything, appears there that indicates that you were working on any days during that month upon American continuous draft gear.

A. This page in July does not show what cars were worked on because the book at that time was not used for that purpose.

X Q. 157. Was there any book used for that purpose at that time, within your knowledge?

A. There was a book used as a piece work book.

X Q. 158. Do you mean by that Defendant's Exhibit C, the book I now hand you?

A. Yes, sir.

X Q. 159. Will you turn in that book to the record for the month of July, 1899, and show us the record indicating that you were working during that month upon American continuous draft gears?

A. This book doesn't show that I was working at all, because it only shows men that were working piece work. My time was shown in—as a day worker—in the other book, Defendant's Exhibit E.

X Q. 160. Then there is nothing, is there, in the book, Defendant's

Exhibit C, that shows that you were working at any time upon American continuous draft gear? Is that right?

A. The book doesn't designate the class of cars at that time, because it was unnecessary to show it in this book.

X Q. 161. Then, in order that there may be no misunderstanding in this matter, I'll ask you what you meant by your answer to Q. 157, in which you were asked if there was a book showing
74 what cars you worked upon, and to which you answered that there was a book, designating piece work book, Defendant's Exhibit C, which you now hold in your hand.

A. Well, I would answer that question by saying that I understand the question to mean showing the men, amount of men on the cars.

X Q. 162. Is that the only explanation you wish to give?

A. Well, I think that is a sufficient explanation.

X Q. 163. Do you know, of your own knowledge, how it happened that this small letter "c" appears in the time book above the number of hours that various men worked only during the month of April and not for any of the other months during the following year that this book covers?

A. I would answer that by saying that I do know from the fact that we were just starting repairs and at the same time we were doing building work and yard work and were starting repairs, and the men to designate them on the car work were marked with a small letter "c".

X Q. 164. I believe you said that Tom Watkins started to work on the 11th day of April and that his principal work there was upon draft gears. Is that correct?

A. I believe that is the answer I gave, that I took it from the book.

X Q. 165. How many days in the month of April, 1899, did Tom Watkins, according to this book, work upon car repairing?

A. The book shows in the first half his time all marked with a small "c"; the last half shows a different marking.

X Q. 166. The book shows five days in car repairing for Tom Watkins during the first half of April, 1899, and his time during the second half of April, 1899, is marked with a small "k". Is it not?

A. Yes, it is.

75 X Q. 167. Do you know the meaning of the "k" that appears there?

A. I can't recall why it was marked "k".

X Q. 168. And the five days that Tom Watkins' time was marked with a "c" simply indicates that he was working upon car repairing but does not indicate whether it was upon draft gear or not. Is that not correct?

A. The five days only indicates he worked on cars.

X Q. 169. The trouble that you had with American continuous draft gear was occasioned by the stretching of the draft rod, as I understand you. Is that correct?

A. Stretching of the rods.

X Q. 170. And as a result of the stretching, the cross key passing through the draft rods, the draft timbers, and the coupler, would strike the front ends of the slots in the draft timbers, thereby causing damage. Is that a correct understanding?

A. I believe it is.

X Q. 171. That could have been remedied by lengthening the slots in the draft timbers in which the cross key traveled could it not?

Mr. Samuels: The question is immaterial, outside the scope of the direct examination, and calls for the opinion of the witness on a point that has no bearing in this case.

A. It could not have been remedied in that way.

X Q. 172. How did you remedy it, as a matter of fact?

A. By taking out the rods and shortening them.

X.Q. 173. Referring to Defendant's Exhibit C, when do the entries cease to be in the handwriting of Emerick and commence in yours?

A. July, 1900, is the end of his. My first entries are not dated, as to the month.

X Q. 174. Your entries in this book cover how many pages?

A. Ten pages.

76 X Q. 175. And two pages are used for each half month, are they not?

A. With the exception of the last page, which shows to have been doubled up.

X Q. 176. Then, as I understand you, the first two pages in your handwriting covers half month, the third and fourth pages cover a half month, the fifth and sixth pages in your handwriting cover a half month, the seventh and eighth pages in your handwriting cover a half month, and the ninth and tenth pages in your handwriting cover two half months, is that correct?

A. I think so, yes.

X.Q. 177. Is it not true, Mr. Wright, that the only pages in this book in your handwriting that are dated are the fifth and sixth pages, and are they not dated November 30, 1901?

A. As to the month, I believe that's correct.

X.Q. 178. And is it correct as to the year, 1901?

A. Yes, sir.

X.Q. 179. Is the date, November 30, 1901, in your handwriting?

A. Yes, sir.

X Q. 180. Did you, Mr. Wright, make these entries in the book at the time the transactions to which they refer occurred?

A. Yes, sir.

X.Q. 181. For instance, in explaining your method of bookkeeping, the fifth and sixth pages of this book in your handwriting in the column next to the last on the sixth page have certain amounts under the heading "Rates" which are marked "D", and the columns to the left thereof showing the hours opposite the name of the particular man whose time was being kept are, in certain instances, also marked "D". This indicates, does it not, that the man whose time is marked with a "D" was then working by the day and

77 not at piece work, and the column first mentioned gives his rate of wage per day. Is that right?

A. No, not his rate per day; it shows the amount of day work he had in that month.

X.Q. 182. And the totals at the end of the column show the total amount that each man received both for day work and piece work during the period for which his time was kept. Is that right?

A. Yes.

X.Q. 183. You took up the keeping of this book immediately after Mr. Emerick left, did you not?

A. Yes, sir; the keeping of the time fell to me.

X.Q. 184. What was Mr. Emerick's position in those shops?

A. Master Mechanic.

X.Q. 185. Did he do actual work upon the cars himself?

A. He did not.

X Q. 186. And when he left his employment with the Commerce Despatch Line, you at once succeeded to his position as master mechanic, did you not?

A. Yes, sir, but still classed as car foreman.

X.Q. 187. You base your recollection of the dates you have given upon what these books show, do you not, Mr. Wright?

A. The exact dates, yes, sir.

X.Q. 188. And when during the time that Mr. Emerick was with the Commerce Despatch Line you discussed your difficulties with the American continuous draft gear, you did not discuss did you, any question of difficulty in removing it from cars?

A. Why, I think we did.

X.Q. 189. How many times?

A. It would be hard to say how many times. With the exception that there was something said every time that we were together in regard to removal.

X.Q. 190. Did you on or about the 19th and 20th days of
78 February, 1914, at Chicago, in the trial of the cause of T. H. Symington Company vs. Miner, heard by Judge Sanborn, in the District Court of the United States for the Northern District of Illinois, testify in behalf of the complainant in that suit?

Mr. Samuels: Objection. Question contains a large number of details in regard to which the witness from the nature of his experience cannot possibly be informed and which probably do not appeal to his attention at all.

A. Yes.

X.Q. 191. You were cross-examined by me on that occasion were you not?

A. Yes, sir.

X.Q. 192. And in questioning you relative to your talks with Mr. Emerick concerning American continuous draft gear during the time you and Mr. Emerick were employed by the Commerce Despatch Line, were you asked in substance the following question, "You were discussing with him at that time some question of difficulty in removing that particular gear of the American continuous type from cars as I understand you," and did you make the following answer, "No, sir"?

A. I don't remember answering no, though I might.

X.Q. 193. You have testified that you saw a model of a draft gear in Mr. Emerick's possession at one time. Did you ever see more than one model?

A. No, sir.

X.Q. 194. You saw that model, did you not, the summer before you succeeded Mr. Emerick in his position with the Commerce Despatch Line?

A. It was the preceding year, 1899.

(Adjourned until 2.00 p. m.)

(Met pursuant to adjournment.)

X Q. 195. Mr. Wright, in the suit in Chicago that we just referred to, when you were on the stand and being interrogated in reference to your talks with Mr. Emerick concerning difficulties with
79 American continuous draft gear, were you asked the following question: "So that the difficulty you were discussing was simply a question of wear of parts, was it?" and did you answer "yes, sir"?

A. I don't remember exactly how I worded it.

X.Q. 196. Have you any recollection now as to whether your discussions with Mr. Emerick relative to American continuous draft gear were simply as to the wear of parts of that device?

A. They were relative to the difficulty with those parts, yes sir.

X.Q. 197. But did you discuss anything in relation to the American continuous draft gear other than the wear of parts?

A. It's very likely we discussed it in different ways as to the upkeep and extents of repairs.

Mr. Samuels: I desire the record at this point to show that the witness has not during this examination refreshed his memory by a reference to the record in the Symington vs. Miner.

X.Q. 198. I will ask you, Mr. Wright, if you have since you testified in Chicago last February discussed with any one the testimony you then gave.

A. I know, I believe I can say now entirely.

X.Q. 199. Have you at any time up until this moment read or had read to you any of that testimony?

A. I think not to any extent.

X.Q. 200. Have you to any extent whatever?

A. Not the testimony that was taken. The book I believe Mr. Samuels has a copy of I did see the other night.

X.Q. 201. Isn't it true, Mr. Wright, that you have discussed that testimony that you gave in Chicago with Mr. Samuels in this very office the last day or so?

A. No, I don't consider that I have.

X.Q. 202. Let me ask you if you will say that you have not.

A. Not in its entirety.

80 X.Q. 203. Have you any reason for evading my question when you answer, "Not in its entirety?"

A. Not any whatever. By that I mean that I didn't go through the entire testimony.

X.Q. 204. I now ask you, did you go through parts of it?

A. And I now tell you that I couldn't name any parts that we went through.

X.Q. 205. I ask the witness to answer the question.

You have just said, Mr. Wright, that you can't remember any part that you went through. The question was, did you go through any part? You can answer yes or no.

Mr. Samuels: All the questions relating to this question are objected to as irrelevant and immaterial.

X.Q. 206. Can you answer?

A. You are answered in my way, I would say no.

X Q. 207. Then I understand you, Mr. Wright, to say that you have not gone over any part of the testimony that you gave in Chicago, with Mr. Samuels or anyone else since you testified in Chicago in the case of Symington vs. Miner.

Mr. Samuels: I object on the ground that the witness has been interrupted and not permitted to answer the previous question in full, also on the ground that the whole subject is irrelevant and immaterial.

X Q. 208. I now give you Mr. Wright all the opportunity you desire to answer the question asked.

Mr. Samuels: Read the question.

A. I don't see how to explain it in any way than I have, except to say no.

Mr. Samuels: The question is answered.

X Q 209. You were sworn, were you not, Mr. Wright, before you commenced your testimony here?

A. Yes, sir.

81 X Q. 210. You don't remember what you did testify to in Chicago in the case of Symington vs. Miner, do you?

A. No, sir, not all of it.

X Q. 211. Referring, Mr. Wright, to Defendant's Exhibit A, being the pencil sketch made by you yesterday, I ask you what it represents?

A. It represents a cheek plate, or lug iron.

X.Q. 212. Does it represent the cheek plate that you saw in the Emerick model?

A. It does in one way.

X.Q. 213. In what way is that?

A. Inasmuch as showing the slots for the yoke.

X.Q. 214. Is that the only way in which it correctly represents one of the cheek plates in the Emerick model of which you have testified?

A. It represents the end lugs.

X Q. 215. How many lugs appear in the sketch that you have drawn?

A. It would show four.

X Q. 216. That is, an upper and a lower lug at one end of the cheek plate and an upper and a lower lug at the other end of the cheek plate. Is that correct?

A. Yes, sir.

X Q. 217. Did you discuss Mr. Emerick's draft rigging with him prior to the time that you say you saw this model?

A. Yes, sir.

X.Q. 218. How long before was the first conversation?

A. The first conversation was shortly after I went to work in April for the Commerce Despatch Line.

X.Q. 219. And how many conversations did you have between that first one and the time that you first saw the model?

A. I wouldn't say the exact number—or couldn't say the exact number, rather.

82 X.Q. 220. What is your best judgment?

A. Well, I might say that there was four or five at least.

X.Q. 221. Do you think it was probably more than five?

A. Well, I wouldn't like to say that it was more than five or more than four. We would speak of it in talking—something would bring it up, and we would speak of it a few minutes.

X.Q. 222. In the case of Symington vs. Miner herein before identified and in which you testified, were you asked the following questions and did you make the following answers?

Mr. Samuels: This is not presumably a mere test of the witness' memory, and if he desires to do so he is entitled to examine the record.

Mr. Haight: In order that counsel for defendant may understand the drift of this examination we state on the record that we are laying the foundation, as the law requires, to impeach the testimony of the witness, by showing previous contrary statements; and will now, if permitted so to do, complete our question.

X.Q. "Did you ever discuss with Mr. Emerick any draft rigging prior to the time you saw the model as you say in the summer of 1899?" A. "No, sir, not particularly." Q. "Well, in any way?" A. "No, sir, not in any way." Q. Not at all?" A. "Well, I should say no." Were you asked those questions, and did you make those answers?

A. I was asked those questions, but don't think that I answered no to all of them or any of them.

X.Q. 223. What is your recollection now as to whether you discussed this draft rigging with Mr. Emerick prior to the time that you saw the model, as you say?

A. My recollection is that we did discuss it.

83 X.Q. 224. And is this recollection that you have now of your conversations with Mr. Emerick a better recollection than you had in February of this year?

A. I wouldn't consider it so.

X.Q. 225. Is it a more uncertain recollection than you had in February of this year?

A. I wouldn't consider it any more so.

X.Q. 226. You considered it uncertain then, didn't you?

A. Not uncertain that I spoke of draft rigging and this particular one of Mr. Emerick's.

X Q. 227. Can you recall the model that Mr. Emerick showed you from seeing the drawings of the Emerick patent 693,643, copy of which is herewith handed you marked Plaintiff's Exhibit I, of November 20, 1914, for identification?

Mr. Samuels: Objection is made to the question as irrelevant and immaterial, the witness not having qualified as a patent expert.

A. Yes, sir.

X Q. 228. When you testified in February of this year in the case of Symington vs. Miner, were you not upon direct examination by Mr. Samuels shown this very patent and were you asked the following question, "Please examine the drawing of the patent and tell whether this illustrates the device which you have described?" and did you make the following answer, "No, I do not think I could without seeing the model?"

Mr. Samuels: Objected to as irrelevant and immaterial, and merely a test of the memory of the witness as to an unimportant passage or recital almost a year ago.

Mr. Haight: I ask the witness to answer.

A. I don't remember that I did say that in that way.

X.Q. 229. Is that casting illustrated in your sketch, Defendant's Exhibit A, designed for a twin spring or a tandem spring gear?

A. That—as I remember his model, was a tandem.

84 X.Q. 230. Are you positive now that that model was a model of a tandem gear?

A. Yes, sir.

X.Q. 231. How many followers did it have?

A. Four.

X.Q. 232. You remember that positively, do you?

A. Yes, sir.

X.Q. 232. Did you in the case of Symington vs. Miner when you were interrogated concerning this Emerick model, say in answer to the following question, "Tell those different parts he took apart that," "He had two little followers in there and a draft spring, that was at three parts that went up in between these yokes and his yoke band was brought around there and fastened in his key?"

Mr. Samuels: Objection. The question is irrelevant and immaterial and it would be almost impossible for anybody to recall such an extended passage.

A. No, I don't remember of answering it that way.

X.Q. 233. How many followers would there be in a twin spring gear?

A. There would be two.

X.Q. 234. Were there any intermediate stops in the model of the draft gear that Mr. Emerick showed you?

A. There was, as I explained it, at that time, a cross key in the center.

X.Q. 235. Have you in your sketch, Defendant's Exhibit A, indicated where that cross key appears?

A. I have not.

X.Q. 236. Was there a top strap on each of the cheek plates in the model that you saw?

A. No, sir, I didn't describe it as such.

X Q. 237. Was there any strap on the top of the check plate in the model that you saw?

A. Well, I wouldn't call it a strap, it was a continuation of the lug iron or whatever you have got to keep the spring from going up.

85 X.Q. 238. It was a flange, was it not? integral with the cheek plate, was it not?

A. Yes.

X.Q. 239. How many keys were there in the model that you saw?

A. Two.

X.Q. 240. Where was each located?

A. One in the front through the coupler and one in the center in the yoke.

X.Q. 241. What else did the center key pass through, if anything?

A. Through the draft timber.

X.Q. 242. How were the keys kept in position? Were they fastened at their ends in any way?

A. Yes, sir.

X.Q. 243. How?

A. As I remember them, they were made to represent small cheter keys.

X.Q. 244. What were the keys made of?

A. They were made of wood, I believe.

X Q. 245. What held the followers up in the model?

A. Little strips, representing follower straps.

X.Q. 246. They were fastened to the cheek plates by little bolts, were they not?

A. Small bolts, yes, sir.

X.Q. 247. Did you have the model in your hands?

A. Yes, sir.

X.Q. 248. Did you take it apart?

A. No, sir.

X.Q. 249. What was the shape of the yoke?

A. It was—I don't know how to describe it—it was a small yoke—shaped the same as any yoke. I don't know of any particular shape except as a yoke.

X.Q. 250. Did it have a square rear end or a round rear end?

A. Square.

86 X Q. 251. What was the yoke made of?

A. It was made of tin or metal of that kind. As I remember, it was tin.

X.Q. 252. Wasn't it bright, fairly new tin?

A. Yes, it probably was, new tin that was used.

X.Q. 253. The coupler key fit snugly in the ends of the yoke, did it not?

A. Just with play enough to take it in and out.

X Q. 254. Was the yoke secured to the followers in any way?

A. No, sir.

X Q. 255. Did the yoke slide on the central key or did it not?

A. As I remember, it didn't fit tight in the slot—enough room—in and out.

X.Q. 256. That is, you could take the key in and out laterally, but there was no longitudinal movement of the yoke on the key. Is that right?

A. That is right, as I remember.

X.Q. 266. How long was that model?

A. It was small, probably 5 or 6 inches.

X.Q. 267. How high was it?

A. Probably an inch—it might be a little more or it might be a little less.

X.Q. 268. And how wide was it?

A. Possibly an inch and a half or two inches, it was small.

X.Q. 269. Did it have draft timbers?

A. The parts represented draft timbers, yes, sir.

X.Q. 270. What were the dimensions of those parts?

A. The timbers?

X.Q. 271. Yes.

A. Possibly an inch or a little more in height.

X Q. 272. About how wide?

A. Probably a quarter or three-eights inch—it might have been a half inch, I don't remember.

87 X Q. 273. Were they the same thickness throughout?

A. Yes, sir, as I remember.

X.Q. 274. How long was each cheek plate in the model?

A. I never measured them—possibly two or three inches.

X.Q. 275. And how high was each cheek plate?

A. The same width as the draft timbers—width or height, which ever way you take it.

X.Q. 276. How were the cheek plates fastened to the draft timbers in the model?

A. With very small little bolts, or pins to represent bolts. I didn't take them off.

X.Q. 277. Were the cheek plates the same thickness throughout?

A. Except at the ends, yes, sir, and the slot.

X.Q. 278. How wide was that slot?

A. It was very narrow, only made wide enough for his yoke to play in.

X.Q. 279. Did it extend from the upper lug to the lower lug at either end of the cheek plate?

A. I don't understand you.

X.Q. 280. Look at Defendant's Exhibit A; I am asking you if the groove you refer to extended vertically from the upper lug at one end of the casting to the lower lug at the same end of the casting.

A. It extended between the upper lug and the lower lug.

X.Q. 281. How much did the lugs project from the face of the cheek plate in the model?

A. I wouldn't be exact on that; possibly a quarter or three-eighths of an inch.

X.Q. 282. Were the inner faces of the cheek plates smooth or otherwise?

A. Smooth excepting the groove.

88 X.Q. 283. In the model was the central key movable in the sills or in the draft timbers?

A. Not to any extent.

X.Q. 284. That is, there was no longitudinal movement of that key in the draft timbers in the operation of the parts, is that right?

Mr. Haight: I object to the suggestions that counsel makes to the witness, that are evidently designed to warn him of danger.

A. As he showed it on his model, yes, that is correct.

X Q. 285. Inasmuch then, as in the model the central key did not move in the draft timbers and the yoke did not move on the central key, how could you, as a practical draft rigging man, make such a gear work?

A. I'll answer you that it wouldn't work.

X.Q. 286. That model was different in its structure from the structures shown in the Emerick patent drawings, was it not? referring to Emerick patent 693,643?

A. Yes, sir. I might add, inasmuch as his drawing shows a long slot.

X.Q. 287. Do any figures of the Emerick patent drawings illustrate a tandem gear?

A. The one on sheet 2 is made to represent a tandem gear.

X.Q. 288. And the figures, there are figures 6 and 7 representing such a gear, are they not?

A. Yes, sir.

X.Q. 289. Referring to Figure 6, Mr. Wright, I'll ask you in a structure as represented by said figure what movement of the yoke takes place on rearward movement of the drawbar?

A. The yoke moves backward—to the rear.

X.Q. 290. In that figure the intermediate key passes through elongated slots in the yoke, does it not?

A. Yes, sir, it so shows.

X.Q. 291. And the ends of that intermediate key slide longitudinally in elongated slots in the draft timbers, do they not?

A. Apparently, yes.

89 X.Q. 292. In such a structure what is there, if anything, to stop the rear end of the front spring on inward or rearward movement of the drawbar?

A. It's not plainly shown, but it appears to be a lug on the cheek plate.

X.Q. 293. The key between the intermediate followers would not serve to stop the movement of the intermediate followers in either direction in such a structure, would it?

A. Not till it struck the end of the slot.

X.Q. 294. And without intermediate lugs on the cheek plates a draft rigging like that represented in Figure 6 would not work as a tandem gear at all, would it?

A. I don't think so without the lugs.

X.Q. 295. Did you discuss this model with Mr. Emerick more than once?

A. Not the model, no.

X.Q. 296. Did you ever see that model more than once?

A. Not to my knowledge, no.

X.Q. 297. Did you ever talk with anybody about that model from the time you first saw it until January 1, 1914?

A. Not that I remember of.

X.Q. 298. Who did you first talk to about it during the year 1914?

A. Mr. Samuels.

X.Q. 299. Did Mr. Samuels on that occasion show you anything that gave you any idea as to what the model was that Mr. Emerick showed you when you were working for the Commerce Despatch Line?

A. He showed me, I believe, the same papers that we have here today—similar papers. But I said at the time that it didn't agree with the model that Mr. Emerick showed me.

90 X.Q. 300. And wasn't it that suggestion that gave you your ideas relative to the model that Mr. Emerick showed you?

A. That suggestion called it to my mind.

X.Q. 301. And, the thing that Mr. Samuels showed you that recalled it to your mind was the Emerick patent 693,643, was it not?

A. As I remember it, yes, sir.

X.Q. 302. I now show you, Mr. Wright, copy of a patent to William H. Emerick, No. 705,520, marked Plaintiff's Exhibit 2, of November 20, 1914, for identification, and ask you if the figures of the drawings suggest to you in any way the model that you saw of Mr. Emerick's device.

Mr. Samuels: Question is objected to as calling for the opinion of the witness in the comparison of two patented structures, the witness has not qualified as a patent expert and is instructed that he need not answer as his opinion on the disclosure of the later Emerick patent has nothing whatever to do with the case.

Mr. Samuels: The instruction not to answer is withdrawn, but counsel insists on his objections.

A. I should say, as I remember the model, that it doesn't recall it at all.

X.Q. 303. It has the same kind of cheek plates as those shown in the drawings of the Emerick patent 693,643, has it not?

Your attention being particularly called to Figure 3 of the drawing.

Mr. Samuels: Same objection; the fact being noted that the drawing is difficult to read, whereas Mr. Wright has not stated that he is either a draftsman or a patent expert or widely experienced in reading drawings.

A. As near as I could tell, I don't think that it could be the same kind of cheek plate, for the model that I have been explaining showed a horizontal yoke, and this shows a vertical yoke.

91 X.Q. 304. Do the Emerick patent drawings in Emerick patent 693,643, show the kind of cheek plate that you have been talking about in describing the model?

A. Well, it does represent in a sense the lug iron which I have been explaining, inasmuch as it shows a horizontal yoke.

X.Q. 305. And are the grooves or ways that the yoke operates in in the structure illustrated in the patent drawings the same as those that you describe as having existed in the model?

A. I don't understand the lines enough on the drawings to say.

X.Q. 306. Now, where did this conversation with Mr. Emerick relative to his model occur?

A. At the office of the Commerce Despatch Line,—I might say at the shops, because they had two offices.

X.Q. 307. Well, was it at Mr. Emerick's office at the shops?

A. Yes.

X.Q. 308. How long did that conversation last?

A. Probably between 20 minutes and a half an hour.

X.Q. 309. Was anybody present besides yourself and Mr. Emerick.

A. No, sir.

X.Q. 310. Did you ever see an actual operative structure of that device prior to February 18, 1902?

A. Do you mean on a car?

X.Q. 311. Yes, or anywhere.

A. No, not exactly like that, as I remember.

X.Q. 312. In the model of the Emerick device which you saw how did you detach the drawbar from the yoke?

A. By removing the cross key—front cross key.

X.Q. 313. And how would you take the followers out in that model?

92 A. By removing the follower straps at the bottom of the lug.

X.Q. 314. And in doing that, would you detach the yoke from the draw bar?

A. To remove the followers, no.

X.Q. 315. What held the strings between the followers and the model which you have been talking about?

A. Tips or lugs or followers.

X.Q. 316. The springs were not used to hold up the followers in that model, were they?

A. No, sir.

X.Q. 317. We have talked, Mr. Wright, about Mr. Emerick's

patent drawing and about his model. As a practical draft rigging man, I ask you if either in those drawings of the tandem type of gear or in the model of the tandem type of gear you found an operative structure?

A. Well, it—the model was crude, you might say, but it represented, with his explanations to me, a device that would work; but not in the shape that it was then.

X.Q. 318. Did you have other talks about draft gear of the particular type you have been discussing up until the time that Mr. Emerick left the Commerce Despatch Line?

A. We talked—we did talk of them, yes.

X.Q. 319. Can you now pick out any particular conversation and tell us what was said by Mr. Emerick?

A. That would be pretty hard to do, I think.

X.Q. 320. Isn't your testimony as you have given it here yesterday and today, of conversations with Mr. Emerick simply your recollection of all of these talks extending over the entire period of time you were there and up until Emerick left?

A. Well, I hardly know just how to word that for you—He did talk of these things at different times. You have asked me to specify a particular time and what we said; which is pretty hard to do.

X.Q. 321. But what you have said is your recollection of what Mr. Emerick said on all of these occasions, without attempt-
93 ing to give us the talk you had on any particular occasion, isn't that it?

A. Not word for word, I couldn't explain the talk we had.

X Q. 322. But do I make a correct statement when I say that you are giving us your recollection of all these various talks?

A. Why, yes. I am trying to give you an outline of all of them.

X.Q. 324. On your direct examination, in answer to question 58, you said that Mr. Emerick made you acquainted with his invention by talking about it and making sketches on paper. Were any of those sketches illustrative of the entire device?

A. No, sir.

X.Q. 325. They were simply little sketches illustrating parts and were destroyed, were they not?

A. Yes.

X.Q. 326. Was this desk that you brought to East St. Louis from Chicago when the Commerce Despatch Line moved from Chicago, Mr. Emerick's old desk?

A. Yes.

X.Q. 327. And it was the same desk that you had at Hegewisch after Mr. Emerick left?

A. Yes.

X.Q. 328. Was that the desk from which Mr. Emerick produced his model at the time he showed it to you?

A. Yes, it was the only desk in the office.

X.Q. 329. And during the time that you used the desk, you never saw this model in it, did you?

A. No.

X.Q. 330. I believe you said that you saw this model in the summer of 1899, do you know what part of the summer it was?

A. Early part of the summer.

X.Q. 331. And what do you call the first of summer?

A. May is the earliest part of summer, I believe.

(Cross-examination closed.)

94 Redirect examination by Mr. Samuels:

R. D. Q. 333. Before you testified in open court before Judge Sanborn in the case of Symington vs. Miner, had you ever appeared as a witness either in court or in the manner in which you are now being examined?

A. No, sir, I had not.

R. D. Q. 334. Tell how you were affected at that time. Were you at all embarrassed?

(Mr. Haight: Objected to as immaterial.)

Or did you relate the facts as you would in private conversation?

A. I think that I related the facts as I would in private conversation only in a little different wording.

R. D. Q. 335. Referring to Defendant's Exhibit C, the last entry which you have described as in Mr. Emerick's handwriting is in July, 1900. There are a number of pages of subsequent entries which you state are in your own handwriting. One of these is dated November 30, 1901. Why is it that there were so few entries between these dates?

A. I would explain that by saying that when Mr. Emerick left, as the time book shows, there was only one man on the roll except myself; and there were very few men working from that on until in the Fall.

R. D. Q. 336. What is the subject of the entries in this book?

A. It shows the time of the men employed.

R. D. Q. 337. What kind of work were they on?

A. They were on piece work except where otherwise shown.

R. D. Q. 338. Then the entries do not include all work being done at the shop at that time.

A. No.

R. D. Q. 339. Referring to the "*c*" marks in the first pages, in the days of your first employment at the Hegewisch shops, you have stated that this mark refers to car work. Why does it not
95 appear on the later pages? Was any substitute record made?

A. Why, after the first few months when the marking appeared, we were working on shop work; after that, it was straight car repairs; and not necessary to mark anything.

R. D. Q. 340. Then, on the first few pages of the book the work recorded was of more than one kind, and later the entries relate to but a single kind of work, namely, car repairs. This is my understanding of your statements. Is it correct?

A. That is correct.

R. D. Q. 341. When was the invention first fully disclosed to you, giving the month as near as you can.

A. I believe I stated previously the month of May.

R. D. Q. 342. What year?

A. 1900.

(Re-direct examination closed.)

Recross-examination:

R.X.Q. 343. Do I understand, Mr. Wright, that there were very few men working, in fact only one man, from the time Mr. Emerick left until the Fall of the same year? Is that correct?

Mr. Samuels: The question is objected to as a misstatement of the witness's testimony.

A. Well, the dates in the back of the book in my handwriting doesn't show the months 'til November 30th. I believe I stated so before.

R.X.Q. 344. Were there a number of men working for the Commerce Despatch Line whose time was kept in the time book during the Fall and Winter of 1900?

A. I couldn't positively say by the time book.

96 R.X.Q. 345. Outside of the time book, do you recall as matter of fact whether a number of men were working during that period?

A. I would say by my memory not more than ten to fifteen men.

R.X.Q. 346. Then the fact that there is only one man's name appearing in the time book at the close of Emerick's stay and several when you started to keep the time indicates that the Fall and Winter had not intervened between Emerick's leaving and your starting to keep the time, does it not?

A. I do not understand the question.

R.X.Q. 347. You explained the fact that your entries appear to have been made in 1901 and that the notations in connection with some of the last entries made by Emerick were made in 1900, a gap of nearly a year and a half, by saying that when Emerick left there was only one man working and his time was not kept. You then say that during the Fall and Winter of 1900 a great many men were working, and their time was kept. Therefore, it follows, does it not, that between the time that Emerick left and the time you started to take the time of the men, a Fall and Winter had not intervened.

A. As I understand the question, there is a blank appearing in the time book after Mr. Emerick left, until I am supposed to have taken charge.

R.X.Q. 348. Well, never mind, Mr. Wright, it is true, however, is it not, as you have previously stated, that you started to take the time immediately after Emerick left?

A. Yes.

(Re-cross examination closed.)

(Signed) W. SCOTT WRIGHT.

(2:00 P. M., same day, met pursuant to agreement.)

97 CHARLES S. DARRACH, a witness produced on behalf of the defendant, first being duly sworn, testified in answer to questions propounded to him by counsel as follows:

Direct examination by Mr. Samuels:

Q. 1. Mr. Darrach, please state your name, age, residence and occupation.

A. Charles S. Darrach, age 51, residence East St. Louis, Illinois. Occupation, Supt. Freight Traffic, of the St. Louis & Bellville Electric Railway and of East St. Louis & Suburban Railway.

Q. 2. How long have you occupied that position and what was your previous employment?

A. Have occupied my present position since February, 1902. My previous occupation was Superintendent of Car Service of the Commerce Despatch Line in Chicago, Ill.

Q. 3. What part of Chicago?

A. Our offices were in the Monadnock Building, Dearborn and Jackson Streets, and the car shops were located at Hegewisch, Ill.

Q. 4. When did you first enter the employment you have just described with the Commerce Despatch Line?

A. I was first employed by the Commerce Despatch Line at Indianapolis, Ind., in the Fall of 1898.

Q. 5. Did you ever spend any considerable amount of time at the shops at Hegewisch?

A. I was accustomed to go out to the car shops about once a week for the purpose of checking up the car repairs.

Q. 6. When did you first begin to go out there in that way?

A. I first—if I remember correctly—it was late in the Summer or early in the Fall of 1899.

98 Q. 7. How do you fix the date you have just given?

A. Well, I remember of being in the city of Chicago for several months before going out to Hegewisch, and I remember being in Chicago early in the spring of 1899—I know it was the spring, because I happened at that time to ride a bicycle and remember distinctly of going around over the south part of Chicago looking for a room which would be a comfortable place to live in during the summer. My attention having been drawn to the fact not to look for a room which might be properly heated, but to look for a room that would be cool for the summer season.

Q. 8. Do you know one William H. Emerick?

A. I do.

Q. 9. When did you first meet him?

A. I met him in the spring of 1899.

Q. 10. Where did you first meet him?

A. I first met him in our offices in the Monadnock Building; he being employed by our company at the Hegewisch shops.

Q. 11. Did you never go to the shops until you had been in the Chicago office several months?

A. Yes, sir, I had been out there.

Q. 12. To what extent?

A. I had taken trips out there occasionally without any purpose

in view. I had gone out there a number of times before I went for the purpose of getting a list of repairs.

Q. 13. What was Mr. Emerick's position with this company?

A. I don't remember his title, but he had charge of the repair work.

Q. 14. Did he ever disclose to you an invention relating to draft gear?

A. Yes, sir, he did.

99 Q. 15. When?

A. I think the first time I ever saw Mr. Emerick, he spoke to me about a patent draft rigging which he was then perfecting—calling attention to the reduced cost and labor which his draft rigging would cause as compared with the other draft riggings which we then had on our cars.

Q. 16. Did you understand the invention as it was disclosed to you?

A. Why, I remember it in the—in the important details of it——

Q. 17. Did he show you a model at this time?

A. Yes, sir.

Q. 18. What kind of a model was it?

A. It was a model which he—the model that he showed me was one made out of wood and some metal parts.

Q. 19. Mr. Darrach, are you a draftsman or an engineer?

A. No, sir.

Q. 20. What is your experience as a car man and how long?

A. I have been associated with car—freight car repairs, more or less, for 12 or 15 years.

Q. 21. Can you describe this invention in a general way?

Mr. Haight: I object to the question on the ground that it is too broad, incompetent and immaterial.

A. I remember—as near as I can remember, the model which Mr. Emerick showed me was one which permitted the springs and followers to be taken out without removing the rest of the draft rigging. It had a horizontal yoke which instead of being fastened with rivets had removable keys which passed through the two cheek plates, one on either side of the draft rigging.

100 Mr. Haight: I move that the first part of the answer be stricken out as irresponsive and also as it is a mere conclusion of the witness and not descriptive of any structure.

Q. 22. You have described the draft gear as one having a horizontal yoke from which the springs and followers could be removed without removing the draw-bar and with a key instead of rivets. How was the yoke connected to the draw-bar?

A. By means of a key.

Q. 23. How was the draft stress to be communicated from the yoke to the car?

A. I have described it just as near as I can remember it.

Q. 24. The majority of draft gears include certain metal members—certain metal parts secured to the sills to receive the drawing

and buffing stresses from the followers. Tell whether the draft gears to which you refer had any corresponding members.

Mr. Haight: Objected to as leading and suggestive.

A. I have described this thing as nearly as I can remember it—as it is in my mind at present; which is as follows: The horizontal yoke was attached to the cheek plates by means of a key, there being a little slot in the cheek plates to secure the end of the yoke. The cheek plates had the removable keys fastened to them and this feature of the draft rigging made it possible to take down the springs and followers with less labor than it could be done by other draft riggings which were in use at that time.

Q. 25. As I understand the structure you have described, you could easily disconnect the draw-bar from the yoke by removing the keys. Is this so?

A. It was not necessary to cut loose any rivets to take the draw-bar off of the yoke.

101 Q. 26. Then this could be accomplished by merely removing the key?

Mr. Haight: Objected to as leading and argumentative.

A. That was what I intended to describe above.

Q. 27. Do you know one W. S. Wright?

A. I do.

Q. 28. When did you first meet him?

A. I first saw Mr. Wright at the Hegewisch shops early in the spring of 1899. He was then one of the assistants in the car repairs work at the shops; he afterwards being placed in charge of the work there.

Q. 29. Do you know when he was first employed there?

A. I think it was in that spring, the first spring that I met him.

Q. 30. You are sure he was there in the spring of 1899?

A. Yes, sir.

Q. 31. Do you know of any written memorandum which would tend to show the date of your employment or rather your connection with the Hegewisch shops?

A. Yes, sir, I do.

Q. 32. What is the general nature of that memorandum?

A. It was in the nature of some records of certain car repairs which I had made while in the—while at the Hegewisch shop, at different times.

Q. 33. In whose writing were they?

A. In my own.

Q. 34. In the form of a book?

A. Yes, sir.

Q. 35. Any other writings in the book?

A. Yes, sir.

Q. 36. What are they?

A. It was the record of the same kind of work that I was

102 doing.

Q. 37. In whose writing?

A. I am not so sure about that—but I think it was Mr. Emerick's writing—at least the books were turned over to me by him.

Q. 40. I hand you herewith memorandum book marked Special Repairs, also marked Plaintiff's Exhibit F, Symington vs. Miner, 30700. Please look at this and tell whether it is the memorandum to which you refer.

Mr. Haight: Objected to as incompetent and no proper foundation for it.

A. (Exhibit marked Defendant's Exhibit B, List of Repairs.)

Mr. Haight: I object to the offer on the ground that no proper foundation has been laid therefor and it is also incompetent.

A. This is the book in which I made the record of the distribution of repairs to the cars.

Q. 41. What is the date of your first entry in this book?

Mr. Haight: Objected to as not the best evidence and for the reasons heretofore given.

A. The first record which I identify in the book is of the first half of September, 1899, under the head of "Pay Roll No. 12."

Q. 42. Is this in your handwriting?

A. Yes, sir, it is.

Q. 43. You have related various circumstances which show that you first arrived at the Hegewisch shops in the spring. In view of these various circumstances, are you absolutely sure that you did go there at that time as related in your previous testimony?

A. Yes, sir, I am.

Q. 44. You are likewise sure of the other dates that you have given as to your meeting with Mr. Emerick and Mr. Wright and the place and nature of their employment as above testified?

A. Yes, sir, I am.

103 Q. 45. Have you ever testified to these facts before?

A. I have testified to at least some of them, I don't know whether all of them or not.

Q. 46. Under what circumstances and in what case?

A. Symington vs. Miner.

Q. 47. I hand you herewith a printed copy of United States patent to Emerick No. 693,643. As a witness to the specifications there appears the name C. S. Darrach. Please look at the drawings and specifications and tell whether you are the witness who signed the specification.

A. Yes, sir, I am.

Q. 48. According to your understanding, please tell whether the invention which you have described is the same one which was described in the specification which you signed and which is now embodied in the patent.

Mr. Haight: Objected to as incompetent, irrelevant and immaterial, calling for a comparison, and also for a conclusion, and no proper foundation has been laid.

A. As far as I remember, this is the same draft rigging as the one which I have previously described.

Q. 40. Did you ever witness any other patent application for Mr. Emerick?

A. This is the only one that I ever witnessed.

Q. 50. Did you understand at the time you witnessed the specification that Emerick was making application for a patent on the device on which he had been talking to you from time to time and which you have just described?

Mr. Haight: Objected to as incompetent, irrelevant and immaterial, it calls for a conclusion and embodies assumptions for which there are no foundations.

A. The application for patent which I witnessed was for the draft rigging about which he had so frequently talked to me, which represented his completed model.

104 Q. 51. Did Mr. Emerick ever say anything to you about making an application for patent at the time of these earlier conversations?

A. He spoke to me several times of having completed his draft rigging model and that he intended to get a patent on it as soon as he had accumulated enough money to do it.

Q. 52. Was there any expense involved in this in addition to the lawyer's fee?

A. He told me of some expense he had had in having the model made.

Q. 53. Have you any idea of the amount of this expense?

A. No, sir, I have not.

Q. 54. Did he seem to be continuously interested in the invention from the time you first knew him until he made application for the patent?

Mr. Haight: Objected to as incompetent, irrelevant and immaterial.

A. He had spoken to me a great many times about his ideas of what a proper draft rigging should be and told me that he had one which would revolutionize draft rigging expense and convenience as to repairs on same.

(Direct examination closed.)

Cross-examination by Mr. Haight:

X.Q. 56. Mr. Darrach, in February, 1914, you testified, did you not, in the case of T. H. Symington vs. W. H. Miner, tried before Judge Sanborn, United States District Court sitting at Chicago?

A. I did, yes, sir.

X.Q. 57. Is your recollection of your conversations with Mr. Emerick better now than it was then?

A. I don't know as it is.

X.Q. 58. Where did you have your first talk with Mr. Emerick in regard to draft rigging for railroad cars?

A. Why, it was up in Chicago.

105 X.Q. 59. Where in Chicago?

A. I think the first place I ever saw Mr. Emerick was in my office in Monadnock.

X Q. 60. And was it there that you had the first talk with Mr. Emerick relative to draft rigging?

A. I think so.

X.Q. 61. Where did you first see the model to which you have referred?

A. If I remember correctly, the first model he showed me was a rude model which he had made out of some rough material himself. The next model he showed me was the one for which I witnessed the application for a patent.

X.Q. 62. Was the first model first seen by you at the office of the Commerce Despatch Company in the Monadnock Building or at the shops of that company at Hegewisch?

A. I think it was out at Hegewisch where I saw the first model.

X.Q. 63. And did you see this model in Mr. Emerick's office at Hegewisch?

A. I don't remember. It seems to me, though, that I saw it somewhere around the shops there.

X.Q. 64. When did you enter your employment with the Commerce Despatch Company?

A. In the fall of 1898.

X.Q. 65. And in what capacity did you first enter their employment?

A. As a stenographer.

X.Q. 66. And how long did you continue in that capacity?

A. Well, we moved our offices to Chicago in the spring of 1899, and I think I worked as stenographer for a few months, and then I was promoted to an official capacity. We left Chicago in the February of 1902, and I continued in my capacity as Superintendent of Car Service until the Commerce Despatch Line had wound up its affairs; which was a few months after we came to East St.

106 Louis. At the same time I was working for the East St. Louis & Suburban Railroad Company and the St. Louis & Belleville Electric Company.

X.Q. 67. Where was the Commerce Despatch Line Company located prior to the spring of 1899?

A. Immediately prior to the spring of 1899, they were located, I think, at Indianapolis, Ind.

X.Q. 68. Now, when in the spring of 1899, did the Commerce Despatch locate in Chicago?

A. It was—I don't remember exactly, but it was early in the spring.

X.Q. 69. What was the official capacity to which you were promoted following your service as stenographer?

A. I was made Superintendent of Car Service.

X.Q. 70. Did you come in contact with Mr. Emerick prior to the time you were made Superintendent of Car Service?

A. Yes, sir, I did.

X.Q. 71. Did you ever talk with him at the shops of that company prior to the time you became superintendent of car service?

A. Yes, sir, I did.

X.Q. 72. Did you ever talk with him in the office before you had the talk at the shops concerning his invention?

A. Yes, sir, he had spoken to me about working on his new draft rigging.

X.Q. 73. And was that while you were still acting as a stenographer?

A. I think so.

X.Q. 74. And while you were a stenographer and on the first occasion that you ever saw Mr. Emerick he told you about his invention, did he?

A. About the first time I think I ever saw Mr. Emerick, he spoke to me in the course of some conversation which we had about our expense at the shops for equipping our old equipment with automatic couplers and told me that when he got his draft rigging com-
107 pleted that the cost of repairs on draft rigging would be very materially reduced. I was interested in the repairs which were being made to the cars and he naturally, without revealing just what his invention would be, told me as above stated. I had heard of Mr. Emerick some time before I had met him and had more or less correspondence with him.

X.Q. 75. Then in none of these early conversations did Mr. Emerick tell you what his invention was. Is that right?

A. He told me that the chief features of his invention would be in the line which would admit of the drawbars being replaced and the draft springs and followers taken out without the necessity of cutting or shearing off rivets, and that his methods to be used were in the nature of removable keys. He also mentioned certain appliances which he was going to put on the side, known as cheek plates, and a horizontal yoke.

X.Q. 76. Did he tell you all that the first time you ever saw him?

A. No, sir.

X.Q. 77. Did he tell you what you have just related before or after you became the superintendent of car service?

A. I don't remember that.

X.Q. 78. In your direct examination, you referred to a book, Special Repair Record, Defendant's Exhibit B, and to a certain entry therein headed "Pay Roll No. 12, first half September, 1899," and you use this to fix some date. What date did you refer to?

A. The first half of September, 1899.

X.Q. 79. What event does this entry recall to your mind?

A. That recalls my presence at the shops and that Mr. Emerick was out there.

X.Q. 80. Do you by this fix the first date that you talked to Mr. Emerick at the shops?

A. No, sir. I had met Mr. Emerick at the shop on other occasions before I went out there to make these records.

108 X.Q. 81. In whose handwriting is the entry "Pay Roll No. 12, First half September, 1899," and the items following on the same page?

A. The entry is in my handwriting.

X.Q. 82. Was the making of these entries a part of your duty as superintendent of car repairs?

A. Yes, sir .

X.Q. 83. Are there any entries in this book prior to the one just referred to that were made by you?

A. I don't find any others here.

X.Q. 84. Does that fact refresh your recollection in any way as to when you first became superintendent of car repairs?

A. Well, the date—I was up there all the time. I can't remember the capacity—I don't remember just when I ceased to be a stenographer and took charge of equipment as superintendent of car service, but I was there in one capacity or the other.

X.Q. 85. Did Mr. Emerick talk to you about an invention any length of time before he showed you the first model?

A. It was not a great time from the time I first met Mr. Emerick until I went out to the shops, and I do not remember whether it was the first occasion or the second occasion that he showed me some model.

X.Q. 86. Do you remember that model now?

A. I remember it only as to the manner which I have previously described.

X.Q. 87. Have you between February of this year and now read, or have you heard read, the testimony which you gave in the suit of Symington vs. Miner?

A. I have not read it nor have I heard it read.

X.Q. 88. Have you discussed that testimony in any way at any time?

A. I have not, I do not even know the outcome of the suit. Perhaps my bearings might be better if I had paid more attention to it.

109 X.Q. 89. Have you any interest in this case of any kind?

A. Absolutely none, in any respect whatever, either directly or indirectly.

X.Q. 90. Did you discuss your testimony as you expected to give it before taking the stand today with anybody?

A. No, sir.

X.Q. 91. Can you now describe in detail the model which Mr. Emerick showed you first?

A. I can only describe it so far as I have already stated.

X.Q. 92. And the things that you have said today are recollections both of what Mr. Emerick told you and of the model, are they not?

A. Yes, sir, they are my recollections.

X.Q. 93. And which of those things you recall from having seen the model and which you recall from talks with Mr. Emerick you cannot now say, can you?

A. I can't tell any more about it than I have already told.

X.Q. 94. In the suit of Symington vs. Miner, already identified, were you asked the following questions and did you give the answer following?

X.Q. Can you describe the model in a general way?

A. I can't describe it in detail except it was a model which consisted of removable keys with castings or side cheek plates as they were called, which enabled the removal of the coupler, also the yoke and the springs in an easy manner which facilitated the repairs to the draft rigging.

Mr. Samuels: I object to the question, as outside of the scope of the direct examination, no reference having been made to the questions and answers in the record referred to.

A. If that is the record, I evidently testified to it.

X.Q. 95. Do you remember how many keys that first model had?

A. I don't remember.

110 X.Q. 96. Do you remember how many springs it had, if any.

A. It had two springs.

X.Q. 97. Were they side by side?

A. I don't remember whether they were tandem springs or twin springs.

X.Q. 98. You saw the second model at the time that Emerick's patent application was made, did you not?

A. Yes, sir.

X.Q. 99. What was the difference between the second model and the first model which you saw?

A. I do not remember.

X.Q. 100. When on your direct examination, in answer to question 28, in which you were interrogated as to when you first met Mr. Wright, you answered that you first saw Mr. Wright at the Hegewisch shops. Had you ever seen him at the office in the Monadnock Building prior to that time?

A. I don't think so.

X.Q. 101. In answer to Q. 31 of the direct examination today, you said that you did have a written memorandum showing the date of your connection with the Hegewisch shops. Was that memorandum Defendant's Exhibit B?

A. This is the book that was given to me to identify.

X.Q. 102. Referring now to the copy of the Emerick patent 693,643, I ask you if you ever read the specification thereof.

A. I remember reading it at the time but do not think I have read it since.

X.Q. 103. Do you know the contents of this patent now?

A. I do not know all the contents of this application.

X.Q. 104. Then, how do you know that what is described in here is the same thing as you had previously described as having

111 been related to you by Mr. Emerick?

A. Because at that time I was more familiar with the important features of Mr. Emerick's model and the application for patent represented, in so far as I knew, the model about which he had spoken to me and which he had shown me.

X.Q. 105. You say, Mr. Darrach, as far as you know. Do you know whether it is the same or not?

A. I knew at the time I signed that application that it was the same model about which Mr. Emerick had previously spoken to me.

X.Q. 106. And was that the second model.

A. Yes, sir. The model used in this application for patent was the completed model which Mr. Emerick had had made for this application.

X.Q. 107. But you don't know, Mr. Darrach, of your own knowledge whether the structure embodied in this patent is the same structure embodied in the first model or not, do you?

A. I know that the model which is used in this application embodied the important features of the other model which Mr. Emerick had shown me. These important features were the ones which I have given in previous testimony here.

X.Q. 108. How many different structures are shown in the drawings of the Emerick patent?

A. I don't know.

X.Q. 109. Do you remember whether the second model of Mr. Emerick's had followers or not?

A. I presume it did.

X.Q. 110. Do you have a recollection now on that subject?

Mr. Samuels: The question is objected to as outside of the scope of direct examination, and these models were not discussed.

A. I do not remember the details as to the various parts contained in this model, but I am quite sure that as the purpose of the
112 advantages of this model was for the convenience of removing the draft springs and the followers that the model surely must have had the followers and the springs.

X.Q. 111. Do you know how, in the second model, the springs were held in position?

A. No sir, I do not remember that detail.

Mr. Samuels: Same objection.

X.Q. 112. Do you remember how, in the second model, the springs were removed?

Mr. Samuels: Same objection.

A. They were removed by taking out the key which released the springs and the followers.

X.Q. 113. How many keys were there?

Mr. Samuels: Same objection. I would also like to have counsel for plaintiffs state to just what structure he refers.

Mr. Haight: Counsel for plaintiff states it is obvious that the witness does not know the details of any of the models and counsel is therefore unable to describe the structure concerning which interrogation is being made.

Mr. Samuels: Witness is instructed that he need not answer, as counsel has made the question so indefinite that it cannot be understood.

X.Q. 114. How many keys of the character just described by you were there in the model that you saw at the time the patent application was made by Mr. Emerick?

Mr. Samuels: Objection is made on the ground that the question is outside of the scope of the direct examination, and second on the ground that no particular one of the models offered at the time the application was made has been identified. There were, in fact, two such models and no attempt has been made to distinguish them.

Mr. Haight: I ask for an answer.

A. I do not know.

X.Q. 115. Have you ever heard of a patent to one Jacob
113 J. Byers?

A. No, sir.

(Cross-examination closed.)

Re-direct examination by Mr. Samuels.

R. D. Q. 116. You have stated that before becoming superintendent of car service you were a short time stenographer for the Commerce Despatch Company. Now presumably you were not entirely unfamiliar with the duties of the new position when you entered into it. Please explain this and tell how you became suited for superintendent of car service.

Mr. Haight: Objected to as leading and immaterial.

A. In my capacity as a stenographer for the Commerce Despatch Company it was also my duty to check up car repairs and to make up car repair bills from the data which I received from the foreman of the shops at Hegewisch, Ill. This work I had been doing almost all the time I was employed by the Commerce Despatch Line and at a subsequent date when I was made Superintendent of Car Service my duties were increased to the extent that the operation of the equipment was entrusted to me. In other words, I had charge of the operation of the cars in actual railroad service.

R. D. Q. 117. In other words, you were fully in touch with the car service of your company when you first became acquainted with Mr. Emerick?

Mr. Haight: Objected to as leading.

A. I can't say that I was fully conversant with the operation of the cars, but my knowledge of affairs increased by reason of having worked in a subordinate position.

R. D. Q. 118. Then, you were fairly familiar with the duties of the office when you entered it?

A. Yes, sir.

R. D. Q. 119. Mr. Haight has referred to certain later
114 models made about the time Emerick applied for his patent. Did you ever become familiar with these?

A. Only to the extent of the important features of his models.

R. D. Q. 120. Your statements indicate that you were more fully acquainted with the subject of the Emerick patent at the time you witnessed the application than you are at present. Please tell your position in this regard.

Mr. Haight: Objected to as argumentative and immaterial.

A. After a lapse of about 14 or 15 years it is hardly to be expected that any one's memory would be as fresh as to details as it was at the time the application was signed.

(Re-direct examination closed.)

(Signed.) CHARLES S. DARRACH.

115 In the United States District Court, District of Maine.

In Equity. No. 705.

On Patent No. 673,419.

THE NATIONAL MALLEABLE CASTINGS COMPANY and JACOB J. BYERS, Plaintiffs,

vs.

THE T. H. SYMINGTON COMPANY, Defendant.

STATE OF MISSOURI,
City of St. Louis, ss:

I, Martha A. Shelton, a Notary Public in and for the City of St. Louis and State of Missouri, duly commissioned, qualified and authorized to administer oaths and to take and certify depositions, Do hereby certify that the foregoing depositions of W. Scott Wright and Charles S. Darrach, were taken before me on behalf of The T. H. Symington Company, defendant, on the 19th and 20th of November, 1914, at the offices of Messrs. Carr & Carr, 510 Pine Street, St. Louis, Missouri, pursuant to the notice and by agreement of counsel.

I further certify that on said days I was attended by George I. Haight of Counsel for the National Malleable Castings Company and Jacob J. Byers; and by Edwin F. Samuels of Counsel for The T. H. Symington Company; also that I was attended by the said witnesses who were of sound mind, and who were by me first carefully examined and sworn to testify the truth, the whole truth and nothing but the truth; that the depositions of said witnesses were reduced to writing in the presence of said witnesses respectively from their statements, and in the presence of said Counsel, and
116 that after the depositions had been reduced to writing, they were read by the witnesses and signed in my presence.

I further certify that I have marked the exhibits introduced and signed the same with my name.

I further certify that the testimony of said witnesses is material

and necessary for the T. H. Symington Company in the proceedings in the caption of said depositions named.

I further certify that I have retained said depositions in my possesion for the purpose of sealing up and directing same, and the certificate, with my hand and sending the same to and filing the same in the United States District Court, District of Maine.

And I do further certify that I am not of counsel nor attorney for either of the parties to this suit, nor related to either of said parties by blood or marriage, nor in any way interested in the event of this controversy.

In witness whereof, I have hereunto set my hand and affixed my seal of office, this 11th day of December, 1914. My Commission expires October 25, 1918.

[SEAL.] MARTHA A. SHELTON.
Notary Public.

117 In the United States District Court, District of Maine.

THE NATIONAL MALLEABLE CASTINGS COMPANY and JACOB J. BYERS, Plaintiffs,

vs.

THE T. H. SYMINGTON COMPANY, Defendant.

Deposition of W. H. Emerick, taken before me, Ida M. Walters, a Notary Public within and for the County of Douglas, in the State of Nebraska, on the 21st day of November, in the year 1914, between the hours of 9 A. M. and 6 P. M., at Room 815, Omaha National Bank Building, in said county, pursuant to the annexed stipulation, to be read in evidence on behalf of the defendant in an action pending in the United States District Court, District of Maine, in which The National Malleable Castings Company, et al., are plaintiffs, and The T. H. Symington Company, are defendants.

Appearances:

Mr. George I. Haight, of Chicago, Ill., for the Plaintiffs.
Mr. Edwin F. Samuels, of Baltimore, Md., for the defendant.

W. H. EMERICK, of lawful age, being by me first duly examined, cautioned and solemnly sworn, as hereinafter certified, deposeth and sayeth as follows, viz:

Examined in chief by Mr. Samuels:

Q. 1. Witness please state his name, age, residence and occupation.
A. W. H. Emerick, Omaha, Nebraska. General Traveling Inspector, Pacific Fruit Express Company.

118 Q. 2. Are you the William H. Emerick who is the patentee in Emerick patent No. 693,643, copy of which marked Plaintiff's Exhibit "I" I now hand to you?

A. I am.
Q. 3. When did you make this invention?
A. I conceived the idea of this invention along about 1899.
Q. 4. What part of the year?
A. I should say along about the first part of the year.
Q. 5. Did you ever make a model of it prior to applying for the patent?
A. I did.
Q. 6. What kind of a model?
A. I made three models. I made one small, rough model, myself, from which two models were made later, which were handed to patent attorneys to make application for this draft rigging.
Q. 7. When did you make that first model as near as you can tell?
A. Well, I made the first model in Hegewisch, Illinois.
Q. 8. Tell whether this model was fully illustrative of your invention.

Mr. Haight: We object to the question as calling for a conclusion, also on the ground of irrelevancy and immateriality.

A. I think the model was.
Q. 9. Did you ever show it to any one?
A. Yes, sir.
Q. 10. To whom?
A. I showed the model to Mr. C. S. Darrach and Mr. W. S. Wright.
Q. 11. Where?
A. Hegewisch.
Q. 12. When?
A. About March or April, 1899.
119 Q. 13. Who are Mr. Wright and Mr. Darrach to whom you refer?
A. Mr. Darrach was car service agent with the Commerce Dispatch Line; Mr. Wright was my foreman.
Q. 14. How did you happen to be at Hegewisch?
A. I was master mechanic for the Commerce Despatch Line.
Q. 15. I hand you an account book marked Defendant's Exhibit "E," please tell what it is.

Mr. Haight: Object to the question; the book itself, if admissible, is the best evidence of what it is.

A. This book is a time book which I used to keep the names of employees working for the Commerce Dispatch Line.
Q. 16. Who made the entries in the book?
A. The writing is in my handwriting.
Q. 17. You have said that Mr. Wright was foreman under you. When was he first employed in that position? You may refresh your memory by reference to your memoranda.

Mr. Haight: I object to the witness refreshing his recollection unless there is a showing that his recollection needs refreshing, and that the matter to which he refers does in fact refresh and give an independent recollection.

A. The time book shows that Mr. Wright was in the employ of the Commerce Dispatch Line in April, 1899.

Mr. Haight: Move that the answer be stricken out as not responsive.

Q. 18. Why do you say that he was there in April?

Mr. Haight: Object to that question as immaterial.

A. Because his name appears on the time book and the name is written by myself.

Q. 19. Is there any date in the book in connection with Mr. Wright's name which helped you in reaching this conclusion?

Mr. Haight: Object to the question as immaterial.

A. Yes, sir, the time book. The time book shows that Mr. Wright went to work on the 3rd of April. I employed Mr. Wright at this time to act as my foreman.

120 Q. 20. Is there anything there to indicate the nature of the work he was doing at that time?

A. Yes, sir, to me.

Q. 21. Tell what it means to you and what it is.

A. At the particular time that I hired Mr. Wright the Commerce Dispatch Line were erecting shops. Mr. Wright was employed as car foreman, and had charge of the car works. Mr. Wright was employed and had charge of the car works, car repair work. There are certain marks in the book here which show work performed on cars and work performed on the construction of the building.

Q. 22. Does this indicate to you that Mr. Wright was doing car work?

Mr. Haight: Objected to as leading.

A. It does.

Q. 23. You have said that you disclosed your invention to Mr. Wright. When did you disclose it to him?

A. Soon after he went to work for me.

Q. 24. You say that he first went to work for you on the 3rd of April?

A. Yes, sir.

Q. 25. In what month did you disclose the invention to him?

A. I probably talked to him about this invention in April.

Q. 26. Do you think he understood the invention fully?

Mr. Haight: Objected to as immaterial, calling for a conclusion of the witness on a matter of which he can have no knowledge.

A. I do; being a practical car man he would understand the invention.

Q. 27. What was the manner of your disclosure? How did you make him acquainted with it?

A. By showing him a model which I had; also talking to him, as well as drawing sketches of the device.

121 Q. 28. When did you show him the model?

A. Probably showed him the model when I first commenced to talk to him about it.

Q. 29. What do you think caused you to discuss this invention with Mr. Wright?

Mr. Haight: Objected to as immaterial.

A. Mr. Wright being a practical car man it was natural that I would talk to him about the device, and especially since we were both vitally interested in draft gear.

Q. 30. Of what did this car repair work which Mr. Wright had in charge, consist?

A. Everything pertaining to repairs to cars, viz: roof repairs, side repairs, sill repairs and draft rigging repairs.

Q. 31. How large a proportion of this related to draft rigging?

A. Well, I should say that the particular class of cars we were working on that at least fifty per cent of the work would be draft rigging work.

Q. 32. Did Mr. Wright ever discuss any particular difficulties that he had with draft rigging, with you?

A. Yes, sir.

Q. 33. What were they?

A. The trouble we were having with draft rigging which were in the cars that we had to repair.

Q. 34. What kind of draft rigging was that?

A. The draft rigging known as the American Continuous.

Q. 35. Is there any relation between these discussions of the difficulty of the American Continuous draft gear and the disclosure of your invention to Mr. Wright?

A. The American Continuous draft rigging, one of my greatest troubles, was responsible for the invention which I made. In talking to Mr. Wright, he could very easily see the advantage in my draft rigging over the American Continuous. My idea in this invention was to perfect a draft rigging which could be easily main-

122 tained as well as to the repairs. For instance, my coupler, could be removed by slipping out a key without disturbing the rest of the draft rigging. Also in case of broken springs or followers, same could be removed without disturbing the rest of the draft rigging. My draft rigging contained a horizontal yoke made to fit in the sides of the casting, connected to the coupler with a key passing through slots through the horizontal yoke into the coupler.

Q. 36. How did you remove the springs and followers?

A. By the removal of the small plate on the bottom of the casting, commonly called a "follower" or "spring strap."

Q. 37. Were these features all in the model that you showed Mr. Wright?

A. Yes, sir.

Q. 38. Are these the features you discussed with Mr. Wright?

Mr. Haight: Object as calling for a conclusion.

A. Yes, sir.

Q. 39. Now, in what connection did you make this disclosure to Mr. Wright? Did it have anything to do with your discussion of the American Continuous?

A. It certainly did, as that was one of our greatest troubles, and this device would eliminate this trouble.

Q. 40. You have said that you disclosed the invention to Mr. Wright very soon after he came in as your assistant at Hegewisch shops and in connection with your difficulties with the American Continuous draft gear. Have you any doubt that these events took place very early in the period of his employment, particularly in the months of April or May, 1899?

A. No, sir.

Q. 41. When was this business in Hegewisch started?

A. When the Commerce Dispatch Line started to erect shops at Hegewisch, it was about the first of the year, 1899.

123 Q. 42. When did you first begin to repair cars?

A. We probably started to repair cars about April.

Q. 43. Then when you first began to repair cars, I judge from what you have said, that you encountered great difficulties with the American Continuous draft gear, discussed them with Mr. Wright, and in this connection disclosed your draft gear invention to him. Have you now any doubt at all as to the date of these events?

A. No, sir.

Q. 44. What kind of a model was this first one which you made and have just partially described? What was it made of?

A. Mostly of wood, except the coupler yoke.

Q. 45. What was the yoke made of?

A. Piece of thin iron.

Q. 46. Was the iron in its natural condition or coated with tin?

Mr. Haight: Objected to as leading.

A. The coupler yoke was made of thin iron. It was bright, I don't remember now whether it was of tin or galvanized iron.

Q. 47. How was the yoke placed?

A. Horizontally.

Q. 48. Meaning that the openings were in a vertical direction?

A. The yoke was placed around the side of the casting.

Q. 49. You mean around the inside?

A. Yes, sir.

Mr. Samuels: Put that all in.

Mr. Haight: I suggest that the witness be permitted to explain what he means without the constant suggestions of counsel.

Q. 50. What other elements were embodied in this model?

A. Practically all except not being finished as well as the models which were given to the attorney from which the patent was drawn up.

124 Q. 51. You have referred to side castings, how were these constructed and where were they placed?

A. Side castings were constructed to sit along side of the draft

timbers, fastened thereto with bolts. The inside of the castings or working face were constructed with lug stops.

Q. 52. How was the yoke situated relatively to the stops?

A. The yoke rested between the top and bottom lugs in a recess made to receive the coupler yoke.

Q. 53. Were these features all embodied in the model?

A. Yes, sir.

Q. 54. Did you show the model to anybody else about the time that you discussed it with Mr. Wright?

A. Mr. Darrach.

Q. 55. Who is Mr. Darrach?

A. Mr. Darrach was car service agent of the Commerce Dispatch Line.

Q. 56. What were your relations with him?

A. My relations were very close to him.

Q. 57. At what time?

A. From the time he went to work for the Commerce Dispatch Line until I left the company.

Q. 58. When did he go to the Commerce Dispatch Line?

A. I think Mr. Darrach started to work for the Commerce Dispatch Line in February or March.

Q. 59. What year?

A. 1899.

Q. 60. Have you any doubt as to the date when Mr. Darrach was associated with you or whether it included the months of May or April 1899?

A. Why, I don't have any doubt, it might have been February, it might have been March, it might have been May, just right along in their at the time we were erecting the shops.

125 Q. 61. When, as near as you can tell, did you show him the model and discuss the invention with him as you have stated you did?

A. I probably showed him the model and discussed the proposition with him along about March or April, 1899.

Q. 62. Some time in the spring of 1899?

A. That would be spring.

Q. 63. Did you discuss this with Mr. Darrach frequently?

A. Quite often.

Q. 64. Do you think he understood the invention fully?

A. I do.

Q. 65. There could be no question but what it was a familiar topic with him at the time?

A. None whatever.

Q. 66. In these various discussions of your invention did you say anything about making applications for patent?

Mr. Haight: Objected to as leading and immaterial.

A. I did.

Q. 67. What did you say?

Mr. Haight: Object to the question as leading and immaterial.

A. I said that I was going to take out a patent on the drafting rigging.

Q. 68. Anything else?

A. No, I guess not.

Q. 69. Why did you not do so immediately?

A. To the best of my recollection I was financially embarrassed.

Q. 70. Did this financial difficulty seem to you at the time to be an absolute bar to any steps you might take in applying for patent?

Mr. Haight: Objected to as immaterial; how it seemed to the witness is of no consequence.

126 A. Only so far as I was not in position to take out a patent at that particular time.

Q. 71. You knew of no way of accomplishing it?

A. Not without money.

Q. 72. And I understand you correctly to say that you did not have any money?

Mr. Haight: Objected to as leading and suggestive.

A. I did not.

Q. 73. Did you ever know one Jacob J. Byers?

A. No, sir.

Q. 74. Did you ever hear of him at the time you made your invention?

A. No, sir.

Q. 75. Ever see any draft gear with a horizontal yoke before you applied for your patent?

A. No, sir.

Q. 76. Did you ever hear of one before that time?

A. No, sir.

Q. 77. Then, so far as you knew, at the time you applied for the patent the horizontal yoke was original with you?

Mr. Haight: Objected to as immaterial.

A. Yes, sir.

Q. 78. You have referred to certain later models of your invention made shortly before you applied for a patent. Did I understand you correctly to say that these were made from the original model?

A. The last two models which were made were made from the original model.

Q. 79. How closely did they resemble the original model?

Mr. Haight: Objected to as calling for a conclusion without the giving of facts.

A. Very closely, except the latter models were more mechanically finished.

127 Q. 80. How did you communicate the invention to the draftsman who made the patent office drawings?

Mr. Haight: Objected to as immaterial.

A. The last two models were taken to the patent attorney's draftsman.

Q. 81. Was he instructed to make the drawing according to these models?

A. The models were given to the draftsman to get up specifications and drawings for the patent.

Q. 82. You refer to the patent I showed you?

A. Yes, sir.

Q. 83. Are the patent drawings like the models?

A. I don't quite understand you, Mr. Samuels.

Q. 84. Do the drawings illustrate the later model?

A. Yes, sir.

Q. 85. Did you at any time abandon your interest in this invention before applying for a patent or afterwards?

Mr. Haight: Objected to as calling for a conclusion without any inquiry upon specific facts.

A. No, sir.

Q. 86. Have you any interest in the defendant company in this suit of The T. H. Symington Company?

A. None whatever.

Q. 87. Do you now retain any interest in the patent?

A. No, sir.

Q. 88. Then you have no interest in the outcome of this suit?

A. None whatever.

Cross-examination by Mr. Haight:

Q. 89. Mr. Emerick, you have, during your direct examination, been repeatedly asked relative to answers given by you concerning dates and conversations, whether you had any doubt about the matter concerning which you were interrogated. I now ask you if
128 you have any doubt about anything that you assert?

A. No, sir.

Q. 90. Is there any doubt in your mind, Mr. Emerick, that in the rotation of the seasons the summer follows the spring?

A. I don't quite get your idea, Mr. Haight.

Q. 91. Then if you do not understand so simple a question I will ask you if in your understanding spring comes before summer or summer comes before spring in the rotation of the seasons.

A. In my understanding of the rotation of the seasons, spring comes before summer.

Q. 92. And how long has that been your understanding?

A. It has been my understanding a great many years.

Q. 93. At least for more than a year last past.

A. Oh, yes.

Q. 94. You testified, did you not, in the suit of T. H. Symington Company vs. Miner, in Chicago, and heard before Judge Sanborn, in the District Court of United States, on or about the 19th day of February, 1914?

A. I did.

Q. 95. Was your memory as to when you conceived the invention as good then as it is now?

A. I don't know that my memory was affected any more so then than it is now. It is as good now as it was then.

Q. 96. As a matter of fact, Mr. Emerick, you did not disclose your invention to Mr. Darrach, or Mr. Wright, and you did not show them a model of the invention prior to the time you conceived it, did you? That would be obviously impossible, wouldn't it?

A. I will answer the question in this way: That while I was conceiving the idea I disclosed the invention to them.

129 Q. 97. Then what you disclosed to them was not a complete idea of any invention, was it?

A. Yes, sir.

Q. 98. You said on your direct examination that you showed your first model to Mr. Darrach and Mr. Wright about March or April, 1899.

A. That is right.

Q. 99. You also said in answer to question 23, that you disclosed the invention to Mr. Wright soon after he went to work for you?

A. Yes, sir.

Q. 100. Now, Mr. Emerick, I will ask you if when you testified in the case of Symington vs. Miner, above identified, when you were under direct examination by Mr. Samuels, you were asked the following questions, and did you give the following answers: Q. "Are you the William H. Emerick who is the patentee in the Emerick patent No. 693,643?" A. "I am." Q. "When, to the best of your recollection did you make the invention described in the patent?" Then the question continued by Mr. Samuels, the question refers to the invention in patent No. 693,643, and then by the court. The question is: "When you invented this." Then the question by Mr. Samuels: "When did you first conceive of this invention," and did you answer, "I first conceived the idea of that invention in the summer of 1899?" Did you so testify?

A. If it is in the book that way I presume it must be right.

Q. 101. Do you wish to look?

(Witness examines book.)

Q. What do you say? Did you so testify?

A. I must have testified as they have it there in the testimony.

Q. 102. In view of that testimony, then, how do you explain your statement today in answer to question 4 in which you said

130 that you conceived this invention the first part of the year?

A. If I testified, Mr. Haight, as shown there in the testimony in the summer, I couldn't have understood the question right. I don't doubt but what I said that there, but I didn't understand the question right, because Mr. Wright and Mr. Darrach both went to work for the Commerce Despatch Line before summer, and I conceived this idea before they went to work for the Commerce Despatch Line.

Q. 103. What was there about the question as to when you conceived the invention in Emerick patent 693,643, that you did not understand?

A. Being almost a year past, Mr. Haight, I am hardly able to answer that question.

Q. 104. So when you say now you didn't understand the question?

A. I evidently didn't understand the question because in my testimony of over a year ago in most all my answers I speak of the spring, I speak of March or April or May, and of Mr. Darrach and Mr. Wright going to work for the Commerce Despatch Line along about that time.

Q. 105. Now, Mr. Emerick, when did you make this first model to which you have referred?

A. I made this first model along about, oh, February or March, 1899.

Q. 106. Did you make that before or after you conceived the invention which we have been discussing?

A. I must have made it after I conceived the idea because I couldn't make it before I conceived it.

Q. 107. Where did you make it?

A. At Hegewisch, Illinois.

Q. 108. Whereabouts at Hegewisch?

A. It would be around the shops, possibly some of it up in my room.

131 Q. 109. Do you remember, as a matter of fact, Mr. Emerick, where you made it?

A. Yes, sir.

Q. 110. Then tell us.

A. I have already told you that I made it around the shops or in my room, I may not have made it all in one day or in one place.

Q. 111. Did you have this model completed before either Mr. Darrach or Mr. Wright were employed by the Commerce Despatch Line?

A. Yes, sir.

Q. 112. And had you fully conceived your invention at the time they entered that employment?

A. Yes, sir.

Q. 113. Then what did you mean in your answer to question 96 just asked you, in which you said that "while I was conceiving the idea I disclosed the invention to them?"

A. That wouldn't be anything unusual to disclose the invention to them while I was working on it.

Q. 114. But what do you mean by disclosing it to them while you were conceiving it?

A. I mean by "conceiving" it I talked to them about it.

Mr. Samuels: You mean you talked to them about it while you were conceiving it.

A. I am a Dutchman, I don't always get things as I should.

Q. 115. You say that Mr. Wright understood the invention fully. Did he understand it as fully as you did at the time you talked to him?

A. He understood it after I explained the draft rigging to him.

Q. 116. And if Mr. Wright as a practical draft rigging man found

that your device wouldn't work, would you be inclined to rely on his judgment?

A. If the draft rigging wouldn't work, I understand you to say?

132 Q. 117. Yes, sir.

A. Mr. Wright being a practical draft rigging man, if there were any slight defects in the model or my ideas which I disclosed to him, he would be perfectly competent to see through any defects which I might have presented to him.

Q. 118. In your talks with Mr. Wright did he give any ideas to you that were embodied in your invention?

A. None whatever.

Q. 113. You said in answer to question 50 that practically all the elements of your invention were embodied in the first model. Did you make any reservation by using the word "practically"?

A. I don't quite get your meaning. I might answer in this way, Mr. Haight, yes, there might be something in the first model that would not be embodied in the later model, for instance, my first model might have shown it applied or secured to draft timbers by two or more bolts, while the later models might show it secured by more than two or four bolts; as the application to the draft timbers would have no bearing on the improved features of the draft castings, the difference in the two models would make no difference.

Q. 114. But there were other differences other than the one you have just mentioned in regard to the number of bolts, were there not?

A. In what way do you mean, Mr. Haight?

Q. 115. I refer to any differences.

A. The general design and construction of the models were practically the same.

Q. 116. Why do you again use the word "practically"?

A. Because the application of one or two bolts would make no difference in the construction of the draft rigging.

133 Q. 117. The second and third models that you had when your patent application was filed are in existence, are they not?

A. Not that I know of. You mean at the present time?

Q. 118. Yes.

A. Not that I know of at the present time. I wish they were.

Q. 119. You say that they were the same as your patent drawing, is that correct?

A. To the best of my recollection.

Q. 120. You are not positive about that, are you?

A. I turned the models over to whom I supposed was a first-class practical draftsman and patent attorney.

Q. 121. The question is, are you positive that the structure represented in your patent drawing is the same as the structure represented in your last model?

A. To the best of my recollection now.

Q. 122. But you are not positive, are you?

A. It has been 10 or 12 years now, I don't remember. It was at the time the models were given to the patent attorney.

Q. 123. That is something you don't remember, do you?

A. My models were correct. You ask me if my models were the same.

Q. 124. My question was merely as to your positiveness in remembering that the patent drawings in your patent 693,643 represented the same identical structure as the models that you gave to the patent attorney when your patent application was filed?

A. To the best of my knowledge, although I didn't check the patent drawings and specification on the model.

Q. 125. You invented this device the year before you left the Commerce Despatch Line, did you not?

A. You mean filed the application?

134 Q. 126. No, I will change the question. You conceived this invention, did you not, during the year prior to the year in which you left the Commerce Despatch Line, did you not?

Mr. Samuels: Objected to as irrelevant, immaterial.

A. I conceived this idea in 1899.

Q. 127. But it was the year before you left the Commerce Despatch Line, was it not?

A. Yes, it was more than a year.

Q. 128. How much more than a year?

Mr. Samuels: Objected to as irrelevant, immaterial, calling for a matter of mental arithmetic which has no bearing on the case.

A. Mr. Haight, to the best of my recollection, I think it was possibly fifteen or eighteen months, something like that I wouldn't say positively as to that.

Q. 129. And you left the Commerce Despatch Line in 1901, did you not?

A. I would have to refresh my memory now. I would like to have one of the time books to refresh my memory.

Q. 130. Then Mr. Emerick you have no recollection of these dates except as you gather it from some source other than your own memory, is that true?

A. No, sir.

Q. 131. Now what book do you want with which to refresh your recollection?

A. The time book.

Q. 132. What time book?

A. You have two, I would like to have both of them to be sure of it.

Q. 133. Without those time books can you answer the question I have asked you?

A. Yes, sir, I believe I can.

Q. 134. Well then answer it.

A. To the best of my recollection I left the employ of the Commerce Despatch Line in 1901.

135 Q. 135. Do you remember the month in 1901?

A. I think it was along about the 1st of the year, it might have been in January or February.

Q. 136. Wasn't it nearer July, 1901?

A. No, sir, I hardly think so unless I had some specific dates to go by.

Q. 137. I am handing you, Mr. Emerick, defendant's Exhibit "C" being the time book, and ask you if that is the book with which you refreshed your recollection.

A. That is one of them, and shows that my last figures in here are in July, 1900. This other is Mr. Wright's handwriting.

Q. 138. Is this Mr. Wright's handwriting that is headed "Piece work, November 30, 1901?"

A. I think it is.

Q. 139. Is your recollection the same as to when you left the Commerce Despatch Line now as it was a few moments ago?

A. Yes, sir.

Q. 140. And after looking at that time book you still insist that you left the Commerce Despatch Line in 1901, do you?

A. Yes, sir.

Q. 141. Now, will you look at the other book and further refresh your recollection, said other book being defendant's Exhibit "E."

A. This book is the same as the other, doesn't show the time that I left the employ of the Commerce Despatch Line.

Q. 142. Is that first rough model that you made still in existence?

A. Not to my knowledge.

Q. 143. Do you know of your own knowledge what became of it?

A. No, sir, I couldn't say positively, it has been lost or misplaced in some way, at least, I have been unable to find it, amongst any of my effects.

136 Q. 144. Now there is not any doubt in your mind, is there, Mr. Emerick, as to the dates you have just given me on cross-examination, of your leaving the Commerce Despatch Line, for instance?

A. No, I think not, to the best of my recollection.

Q. 145. In this first model I believe you said the yoke rested between top and bottom lugs on the side castings.

A. It may have rested there.

Q. 146. And was the groove in which the yoke operated formed by those lugs or was it otherwise formed?

A. Otherwise formed.

Q. 147. Was the first model any different in that respect from the two models that were given the patent attorney?

A. No, I wouldn't say it was.

Q. 148. Can you point out that groove in the drawings of Emerick patent 693,643?

A. I don't know as I can, I never looked for it there. It don't make any difference whether it was on here or not, it was in the drawings of the casting that I made.

Q. 149. Examine the said Emerick patent, copy of which you now

hold in your hand, and mark said grooves if you can find them in said drawings, and if you cannot find them, so state.

Mr. Samuels: Objected to as incompetent, irrelevant, immaterial, and calling for the construction of a patent by the witness who is not qualified as a patent expert or a person skilled in drawings.

A. I cannot, according to the patent drawings here, pick out any seat or way for the yoke. However, this seat or way was in the model. The models were also given to a patent maker, from which draft castings were made.

137 Q. 150. When, Mr. Emerick, did you give these models to a patent maker?

A. Sometime between 1902 and 1903.

Q. 151. It was not until after your patent 693,643 had been issued?

A. No, sir.

Q. 152. Prior to the time that those patterns were made had any structure capable of use been made by you embodying the invention that you have been discussing?

A. There had been none made for use.

Q. 153. And none had been made by you or by any one for you?

A. None.

Q. 154. You have stated, Mr. Emerick, that the reason you did not file an application for a patent sooner than you did was because you were financially embarrassed. You were at that time the master mechanic of the Commerce Despatch Lines, were you not?

A. Yes, sir.

Q. 155. And in that employment what salary did you receive?

A. I object to answering that question. I received a salary, of course, and don't know as that matter has any bearing on the case whatever. However, I will answer, this question, my salary was $90.00 per month.

Q. 156. Were you married at that time?

A. No, sir.

Q. 157. You roomed and boarded somewhere?

A. Yes, sir.

Q. 158. Did you apply for any other patent during that period of time?

A. No, sir, not at that period.

Q. 159. It would have taken less than a month's salary to have obtained a patent, wouldn't it?

A. It might have taken less than a month's salary to obtain this patent, but I had other necessary expenses to meet. In other words I had a sister to take care of.

138 Q. 160. How much of your income was spent for your sister each month?

A. I practically paid all of her expenses, living expenses, clothing and everything.

Q. 161. Can you recall what portion of your salary that would require?

A. I should judge it would take about $40 per month.

Q. 162. And your own room and board cost you about how much?

A. About the same.

Q. 163. Who were the officers of the Commerce Despatch Line during the time you were employed there?

A. Mr. L. C. Haynes was the vice-president and general manager. Mr. C. S. Darrach was car service agent. Those were the two gentlemen that I was directly under.

Q. 164. From whom, that is, what individual, did you receive your salary?

A. From the Commerce Despatch Line Company.

Q. 165. What agent or servant of the Commerce Despatch Line paid you your salary from month to month.

A. It was handed to me by either Mr. Haynes or Mr. Darrach as the case might be.

Q. 166. Do you remember who the bookkeeper was during that time?

A. No, I couldn't recall. They had numerous clerks in the office, but I had no business with any of them except Mr. Darrach or Mr. Haynes.

Q. 167. You did not fail to apply for a patent before you did because your invention was not complete until you filed, did you?

A. No, sir.

Q. 168. The only reason you did not file was because you did not feel that you could spare the money, is that right?

A. Yes, sir.

139 Redirect examination by Mr. Samuels:

Q. 169. Did you make any effort to find the model, the first model referred to?

A. Yes, sir, I made several efforts to find not only the first but the last two?

Q. 170. Do you or do you not think that you exhausted the possibilities in this line?

A. I do. I don't know what has become of them. I wish I did.

Q. 171. Do you think there is any difference in the elements of your invention between the first model, the two subsequent models and the specifications and drawings of the patent, with the possible exception of the groove between the lugs?

Mr. Haight: Objected to as calling for a conclusion and for an opinion from the witness, for which no proper foundation has been laid.

A. There should not be.

Q. 172. Is there any question but what the two later models were made from the first model and the patent office drawings from these?

A. There should not be.

Q. 173. Are you or are you not positive on this point? I am not

asking you if they were exactly alike, but if they were made one from the other.

A. The drawings were supposed to be made from the model which I furnished the patent draftsman.

Q. 174. And did these models embody the features of the first model?

Mr. Haight: Object as calling for a conclusion and the record already shows that they were different.

A. They did.

Q. 175. In the financial condition you described, were you able to save any money over your actual necessary expenses?

Mr. Haight: Objected to as calling for a conclusion.

A. No.

WM. H. EMERICK.

140 STATE OF NEBRASKA,
Douglas County, ss:

I, Ida M. Walters, a Notary Public, duly commissioned within and for said County and State, do hereby certify that W. H. Emerick was by me first duly sworn to testify the truth, the whole truth and nothing but the truth, and that the deposition by him subscribed as above set forth, was reduced to writing by myself in the presence of the witness, and was subscribed by the said witness in my presence; that said deposition was taken on the 21st of November, following an adjournment from the 20th of November from the offices of Messrs. Montgomery, Hall & Young, Omaha National Bank Buildings, and were taken at Room 815 Omaha National Bank Building, as per attached stipulation. That I am not counsel, attorney or relative of either party or otherwise interested in the event of this suit.

In witness whereof I have hereunto set my hand and affixed my seal this 21st day of November, 1914.

IDA M. WALTERS,
Notary Public.

Defense.

DELBERT H. DECKER, called by the defendant, sworn, testified as follows:

By Mr. Samuels:

The Court: Your name and residence?

A. Delbert H. Decker, Millerton, N. Y.

Q. 1. Mr. Decker, please state your qualifications as an expert.

The Court: What is he, a patent expert?

Mr. Samuels: He is produced as a patent expert.

A. I am a graduate of Cornell University. After graduation I

entered the office of a patent attorney as a clerk and drafts-
141 man in Washington, D. C. In about two years later, that is, in 1886, I was appointed as assistant examiner in the United States Patent Office. As an examiner in the Patent Office, it was my duty to examine applications for patents, comparing their specifications with the drawings submitted; then to make search through prior patents of the United States and of foreign countries, and occasionally through publications on subjects in the particular art to which the applications for patents related. It was then my duty to compare the application for a patent with such prior devices relating thereto as I had discovered and to determine what there might be in the application that was patentable. As Examiner we were also required to keep ourselves posted as to the decisions of the higher tribunals of the Patent Office and of the Courts relating to questions of patentability, structure of claims, and so forth; also to compare applications on like subject matter, and to determine whether or not there might exist interference between the inventions. At about seven years time from my entrance into the Patent Office I resigned therefrom and went into the practice of patent law in New York City. That was in 1893. I have continued in the practice of patent law, and during the past eight years have been serving as expert witness in patent causes. A portion of that time, extending back for six years, I have served as such witness in several instances for the United States Government, being retained by the Attorney General to assist in the defense against suits brought before the Court of Claims involving the question of infringement of patents by the Government. I have testified in a number of cases for individuals in various arts, and for the past two years or a little more I have had occasion to familiarize myself with the art of draft rigging for cars.

Q. 2. Have you ever testified previously in any suit on the subject of railway draft gears?

A. I have.

142 Q. 3. In what cause? Who were the parties?

A. In the cause of T. H. Symington Company vs. Miner, tried last February in Chicago.

Q. 4. Please examine the patent in suit, to Byers, No. 673,419, and tell what it shows and describes?

The Court: You are calling attention to the Byers Patent?
Mr. Samuels: Yes, your Honor.

A. Said Byers Patent illustrates and describes a draft rigging for freight cars. It shows a typical form, and modifications of that form. In the form illustrated in Figures 1, 2, 3 and 5—you may say 1 to 5,—1-5, there is what is termed in the specifications an integral—strike out "what is termed in the specifications" and what follows. There is a pocket referred to by the numeral "3," consisting of a casting in one integral part, having sides which are attachable to the draft sills of a car; ends 5, which are termed in the specification as "lugs," extending from side to side of the pocket, which ends of the pocket serve as bearing surfaces for the upper and lower ends of the

follower plates 6, 6'. Entering one end of the pocket is shown the rear end of the draw-bar in the figures of the drawing referred to.

The Court: Which drawings are you referring to?

A. Sheet 1, comprising figures 1 to 5. The ends of a yoke, 2'. These yoke ends are riveted securely to the sides of the draw-bar. The yoke extends back into the pocket 3 and surrounds the followers 6, 6'. Between the followers are located springs, 7, and on the face of the followers projecting towards one another are distance or stop projections—say distance pieces or stop projections 8 to limit the amount of pressure that may be applied to the springs, and to separate the springs from one another, the springs being arranged one vertically above the other, and constitute what is termed "twin springs." To the lower side of this integral casting, or pocket 3, a plate 9 is removably attached. By removing this plate, the
143 followers and the springs between them may be taken from the pocket in a downward vertical direction.

On sheet 2 of the drawings, comprising figures 6-9, there is shown a modified form of the structure just described by me. One feature that is modified is that of the means for rigidly connecting the forward ends of the yoke 2' to the draw-bar 2. The connection is effected in this instance by a broad rivet, 11, whose ends are upset, as shown clearly in Figure 7 and Figure 8.

In these figures on sheet 2 a distance piece, 12, seen in end view in Figure 9, is shown, which differs from the distance stops 8 of the previous sheet, in that it is entirely separate from the followers 6, 6'. The remaining two sheets of drawing in this patent, comprising Figures 10 to 12, illustrate the integral casting or pocket provided with extensions at the sides in alignment with the draft sills 14. The draft sills 14 appear in Figure 10 more clearly. One of them is shown slightly in Figure 11.

The Court: Draft sills numbered what?

A. 14. The extensions of the draft sills to which I have referred are numbered 13. The illustration in these Figures 10 to 12 is for the purpose of showing how this integral casting would be modified to adapt it to what is known as the American Continuous System of draft gear.

In this modification the pin 17 provided for attachment of the long rods 19 to the draw-bar and to the yoke is extended through slots in the sides of this casting, 13—sides of this casting, strike out "13;" that is to say, through the extensions, 13.

In Figure 11 it will be noticed there is a large slot provided in the arm for the passage of this key 17.

The Court: What slot is that?

(Witness indicates.)

The Witness: It will also be noticed in Figure 10 that the forward ends of the yoke 2' have been doubled back upon themselves
144 to make a firmer bearing for the yoke upon this key 17.

The Court: To make a firmer bearing?

A. Yes, the connection of the yoke to the draw-bar in this last form, which is shown in Figures 10 to 12, so far as disclosed in the

specification, is as rigid as in the previous illustrations of the drawings.

The Court: Say that again, please. What is as rigid?

The Witness: The connection of the yoke to the sides of the drawbar. In Figures 10 to 12 the distance piece 12, which appear in Figures 6 to 9, and are shown in end view in Figure 9, appear, and in addition thereto are additional distance pieces cylindrical in form occupying the axes of the springs 7. These are shown more clearly in Figure 12. The specification clearly discloses that the object of forming the pocket casting 3, as illustrated in the drawings, with its removable bottom, 9, is for the purpose of permitting the removal downward, in a vertical direction, of the followers 6, 6', together with the interposed springs 7.

Q. 5. Referring now to page 1 of the specification, line 36, and also to the same page, line 96 et seq., tell what you gather from the specification to be the intent of the patentee in regard to the pocket, its construction and nature and function?

A. One purpose is to provide for the followers a continuous bearing across their ends from one side of the pocket to the other. That is true in all the forms shown in the several figures of the drawings.

Q. 6. Is there anything to indicate in the patent, any possibility or intent of making the casting in more than one piece?

A. There is nothing in the specifications or in the drawings to indicate such an intent. They do not make any statement that the pocket is to be formed in any other manner than in a single piece, or—that is to say, that it shall be anything else than an integral whole.

The Court: Do you mean that although it is stated that
145 the pocket may be cast in a single piece, still the tenor of the specifications, as shown in the various parts, is that the various instrumentalities are to be cast integrally with each other into a pocket?

A. Yes.

The Court: As you say, showing an intention to have everything cast integrally with the pocket, making that one thing?

A. That is my understanding of the specifications and the illustrations.

The Court: Even though it does use the expression "may?"

A. It does use the word "may," and states in line 36—"the pocket may be cast in a single piece." That simply shows a preference; but it does not say that when made of more than one piece it shall have any different appearance, so far as the entity goes, or the intent of "integrality," if I may use that word.

The Court: I get your idea exactly. And you give force, do you, to the expression even occurring in the specifications that the different instrumentalities may be cast integrally with each other in the pocket?

A. I do.

The Court: Showing the tendency to what you call "integrality?"

A. Yes. And I am impressed with that still more from the

showing in Figs. 10 and 12, where the inventor goes so far as to add to what is already a cumbersome, heavy casting the extensions 13—extension arms 13.

The Court: I do not think I have that in mind. State that again. Where do you find that? Where do you find it referred to in the specifications? I thought you were giving me the impression you got from that.

The Witness: In the illustrations. I said they gave me that impression.

The Court: Give me the impression that you got again.

146 A. The impression that the intent of the inventor was to make all the parts relating to the pocket one integral whole, and is carried out in this structure here—this structure shown in Fig. 10 particularly, where he goes so far as to add to what is already a cumbersone casting, the pocket, these arms 13, which form extensions of the draft sills.

The Court: Yes, And emphasizing, as you claim, the element for which you coin the word "Integrality?"

A. Yes.

The Court: Or "wholeness," in one thing.

A. Yes.

Q. 7. Referring again to the specifications, line 37, page 1, what can you say of the feasibility of constructing such a pocket of more than one piece, with the horizontal lugs extending across the pocket?

A. The effect would depend entirely upon how the features of the pocket were separated in making it in more than one piece.

The Court: Read the answer.

(Answer read.)

The Court: The question is, how could they be separated if the lugs go across the pocket? Isn't that your idea?

Mr. Samuels: Yes.

The Court: What have you to say to that?

Q. 8. In what way could it be separated, and in what way could it not be separated? I think that will clear that answer up.

A. I conceive how in making this casting in several pieces, the top might be made to screw on to the sides and ends of the casting in a manner similar to which the bottom is screwed on.

The Court: Yes, I see what you mean.

The Witness: I can conceive also that the pocket—box is more descriptive than pocket—might be divided longitudinally by

147 a vertical plane separating it into lateral halves. The difficulty there—that is, resulting from such a division, would be that in the attachment of these halves to their respective sills on the car, the cross lugs, as they are termed in the specifications and lettered 5, which really form the ends of the pocket might not, and in most cases would not, register.

The Court: What do you mean by that?

A. The lugs now are a continuous surface at right angles, we will say, to the sills of the car, or to the sides of the pocket.

The Court: Constituting the ends of the box?

A. Yes. Now, if the box is cut longitudinally in the middle by a vertical plane making lateral halves, and each half bolted independently to the sills of the car, whether they be draft sills or whether they be the regular car sills, the center sills, which sills are punched to receive the rivets or bolts for securing those halves thereto, the cross lugs being divided in the middle might not—each half lug might not register with the other half; in which instance we have the vertically extending follower bearing against simply one side of the ends.

The Court: Yes, I see.

The Witness: Which would result in a very unsatisfactory bearing for the followers upon the ends of the pocket.

Q. 9. In lines 42 and 43, page 1 of the specifications, the statement is found—"7 7′ are the springs, placed, preferably one above the other." What do you understand by this statement?

A. I understand this statement to refer to the fact that the springs 7 7′, as clearly shown for instance in Figs. 1 and 3, are placed one above the other with the axes parallel and horizontal.

The Court: By the way, that expression—"one above the other and between the followers"—now comes the clause—"and to hold them in place," that must mean not the springs to hold the
148 followers in place, but the followers to hold the springs in place, doesn't it?

A. "And to hold them in place, as well as to limit the approach of the followers," the inventor provides the latter with projecting stops 8 in the middle of the followers.

The Court: Oh yes, I see that.

The Witness: These projecting stops help that.

The Court: "And to hold them in place, as well as to limit the approach of the followers, I may provide the latter with projecting stops." It would be plainer if you put a semi-colon after "followers."

The Witness: Yes, it would.

Q. 10. Why does the patentee say "preferably?"

A. In line 43 he states that the springs are preferably placed one above the other.

The Court: Now you are asked why he said "preferably."

The Witness: Oh, I thought you said "where" he said it. "Why" he says "preferably." I misunderstood the question? Of course, I cannot say why the specification writer said he would preferably place these springs one above the other, but he probably had in mind that there were various arrangements throughout this art for these springs. In some instances, they are placed as shown here, one above the other; in other instances, one at the side of the other; in some instances, in alignment axially, or in tandem, as the term is used; in other instances, as many as four springs are placed in different relations, one to the other, depending upon the design of the gearing—drafting rigging being developed. In this particular instance they prefer to use the arrangement illustrated in the drawings.

Q. 11. Do you find illustrated in the drawings of the patent a fol-

lower engaging the ends of both springs, and having at the
149 middle a stop projection which separates the springs? If so, tell in what figure you find it?

A. In figs. 1 to 5 there is illustrated the stop projection you describe. It bears the numeral "8" and projects from the middle of each follower separating the upper spring from the lower spring.

Q. 12. Do you find any alternative construction illustrated and if so, where?

A. In the remaining figures of the drawing I find the alternative structure consisting of a detached distance piece, bearing the numeral "12," which is shown in end view in Fig. 9, in plan view in Fig. 7, and in edge view in Fig. 6. This lies between the springs 7, and separates the upper one from the lower one.

Q. 13. Please take this model, marked for identification, Defendant's Exhibit C, and compare it to the patent drawings and specifications.

A. The model referred to clearly represents the Byers Patented structure illustrated in Figs. 6 to 9 of his drawings—of his patent rather. There has been added to this model the coupler end which was omitted in the drawing. The pocket of the model, which pocket bears the numeral "3", as in the drawings referred to, does not show provisions for bolts "4" illustrated in the drawings at Figs. 7 and 8. But otherwise the model represents the structure of said Figs. 6 to 9. It clearly discloses the distance pieces 12, which I note differs slightly from that shown in Fig. 9, in not having the ends cut out as in said Fig.

The Court: Merely for weight, isn't it? Does that add any force to it?

A. No force—simply to lighten the structure. Cutting out would be simply to lighten the structure. The springs shown in the model are in concentric pairs, instead of single springs as in the drawing.

The Court: What do you mean; each spring is a concentric spring?

150 A. Yes. Each spring is double in the model. That is a common feature in draft rigging, to put springs up in that way.

The Court: Also on the opposite side—each spring contains a concentric spring.

A. Yes. The model clearly shows the integral attachment of the yoke 2" to the sides of the draw-bar 2 by the key, or wide rivet—by means of the wide rivet 11. This rivet 11 is that by which the yoke is fixed on the side of the draw-bar, as stated in the specifications.

The Court: Now, what happens to the inner end of the yoke? How is that connected with the yoke on the other end of the car—with the instrumentalities of the same sort on the other end of the car?

A. In this form represented in the model, there is no provision for connecting it to the rigging on the other end of the car. This is the rigging which is intended to be used by itself on each end of

the car. It is only in what is known as the American Continuous, where a connection is made from one rigging to the other.

The Court: On the same car?

A. On the same car.

The Court: What is that for? What is the purpose of making it continuous? Of course, the rigid car itself forms a continuous system, does it not?

A. Yes.

The Court: My mind is not clear on this. I never studied this art before, and I am just getting it into my mind.

The Witness: If the Court please, the American Continuous System was devised when wooden cars were in vogue, and for the purpose of transmitting stress from one end of a long train to the other, through metal connections. Therefore, it extended in this instance shown in Figs. 10 to 12—they extended this long rivet through the sills, and put on to the ends of the rivet
151 long bars, nearly as long as the car, which extended from the individual draft rigging at one end of the car to the draft rigging at the other end of the car.

The Court: From here to the other end? (Indicating on model.)

A. To the other end. Then when the cars were coupled together, we had, as it were, a chain.

The Court: A metallic chain?

A. Yes, to the end of the car, on which the cars appear as beads, you might say.

The Court: Now, with the metallic car you get that without the rods?

A. Without the rods.

The Court: I see. My mind is just getting familiar with this art. What do you understand to be the basic element—what are draft riggings for, in other words?

A. Draft riggings are for the purpose of saving cars from destruction by the sudden starting and stopping of the train.

The Court: Exactly. If it were not for that, you would have one rigid bar—one rigid draw-bar running right straight through the car—through one car and another to connect that up to make one rigid bar.

The Witness: In the old form of cars the drawbars were fastened to the frame of the cars, and the link was put into the couplers that projected from the ends of the cars. This link was held by a pin to each coupler.

The Court: In other words, if it were not for the element imparted to the structure by the springs, you might as well have a draw-bar in your car—wouldn't you?

A. Yes. The springs take up the buffing stress, and the draft stress, and permit the car to get a start when the one ahead——

152 The Court: You save your machinery, and you save your passengers, too?

A. Yes. This model very clearly illustrates how the power from the draw-bar is transmitted to the spring interposed in the yoke

attached to the draw-bar, the springs holding—or being held in place by the followers, and the forward follower resting against the butt of the draw-bar, the rear follower resting against the rear end of the yoke (indicating on model). Then, as a train starts up, pressure is brought on the rear follower, the forward follower being held by whatever means are provided and attached to the car itself for resisting. And on the buffing, the receiving of pressure from cars coming together, the pressure is exerted against the back of the follower which rests against shoulders attached in some manner to the car.

Now, there are many ways of providing resistance for these followers. In the Byers Patent the way provided is to be found in this integral casting—this box, whose ends have faces—or whose ends receive the ends of the followers. Before I put these followers and springs into the pocket, I wish to call attention to the manner in which the distance piece 12 lies between the followers and between the springs for the purpose of preventing the crushing of the springs under undue stress.

The Court: The play, in the springs, keeps the machinery from getting all driven to pieces, which would happen from a rigid draw-bar?

A. Yes.

By Mr. Samuels:

Q. 14. Please tell the Court some of the difficulties incident to the American Continuous Draft Rigging.

By Mr. Haight: We cannot hear you, Mr. Samuels.

By Mr. Samuels:

Q. 15. Please explain to the Court some of the difficulties
153 incident to the use of the American Continuous rods, as shown in Figs. 10, 11 and 12, of the patent in suit.

A. Where a key, as long as that illustrated in Fig. 10, at 17 is used, and on its end are fastened the long rods 19 extending from one — of a car to the other end of the car, for attachment to a like key, there is a chance of disrupting the connection, because of the strains being unequally distributed along that long key.

By the Court: It says, "Key, and longitudinal rods"——

A. 19, yes; as can be readily seen.

By the Court: What do you mean by that? What sort of things are keys?

A. In this connection a key is that which joins the end of one rod 19 to its parallel rod.

By the Court: Let me see that model.

(Model shown to the Court.)

A. This model does not have anything——

By the Court: Do you merely mean that part of the instrumentality which connects one end of the structure to the other end?

A. The American Continuous, yes. (To Mr. Samuels:) Have we a model representing the American Continuous?

By the Court: That is what he is asking you. Now, how do you do that—longitudinal rods, connecting this structure with the——

A. In this way—by extending this key out through the draft sills, through the side, to each——

By the Court: Oh, yes.

A. As shown in Fig. 10 of the Byers drawings. Then on the ends of this key mount these rods, which have loops, to go over the end of the key. Then by putting—these rods 19, which have loopholes in—then by putting a pin vertically through each end of the key, 19, as shown in Fig. 10, but to which no numeral has been applied, the rods 19 are held to the end of the key; but there is a long
154 rectangle formed by the rods 19 and the key 17, and pressure or stress applied to this key in such a way as to change that rectangle, or to place the key in an oblique position, which would, of course, allow, at times, to shear these keys, and drop down, and buckle under the car, and, as I have been informed, throw cars—it has been known to have been the means for derailing a car. I have seen, myself, under freight cars, pins of the American Continuous so twisted and distorted as to be in dangerous position.

By the Court: Now, one of your answers suggested this, a moment ago—isn't it true that the modern metallic cars make substantially the American Continuous System?

A. They make an improvement on the American Continuous System, because there you have the center sills, rigid members of the car; and we mount the draft rigging in between those, in such a way that the effect upon one draft rigging, at one end of the car, does not effect the draft rigging at the other end of the car, as it would in the American Continuous.

By the Court: Now, of course, the basic notion of draft rigging is, as you say, to get this flexibility, in these springs. Now, when you have one of these instrumentalities on one end of a car and you haven't it on the other, if you want a continuous system, why not put a rigid rod in this, at this end, and in this, at the other end, as long as you have the flexibility by means of the spring? In other words, why not have a continuous draw-bar, mitigated by these springs?

A. Why those forms have not gone into use I am not prepared to say, but various forms of that sort have been devised, among the number of thousand of patents that have been devised along this line.

By the Court: What I mean to say is, what would be the objection, instead of the American Continuous System, to simply putting a rigid rod from one of these structures—from one end of the car to the other end of the car?

155 A. I conceive one objection, right off; and that would be because of the unnecessary weight added. That would have to be a very heavy rod, to prevent buckling.

By the Court: Yes.

A. Any buckling. Of course, any strains——

By the Court: In other words, they practically provide a very heavy draw-bar, by this appliance of the springs, in two parts of the car; and that, I suppose, as you say, would make a very heavy structure.

A. Yes.

By the Court: But I suppose not nearly as heavy as the metallic cars are. It would not add weight in any comparable way to what the all-steel cars weigh, would it?

A. No. The weight in proportion to the entire weight of the car would be small. But the weight——

By the Court: Well, you would not need them, in modern steel cars, of course, but in old wooden cars, it would not make an old wooden car anywhere like the weight of a steel car, would it?

A. No, but the weight of those things, when you come to handle them, in making repairs, would be objectionable, I can easily conceive.

Q. 16. What can you say of the difficulty incident to putting the American Continuous rods in position, after they have been removed, on the road, for the purpose of replacing any part of the draft gear, or otherwise, referring particularly to their flexibility, together with their weight?

A. These rods when applied must, of course, fit closely the pins or keys of the draft rigging at the ends of the car, so that when a rod was removed from the end of the pin it would sag down, being a long rod, and heavy, and it would be a difficult matter, in putting it up, to strain it back again; or, that is to say, to bring the hole in its end back into alignment with the end of the key, for replacing it on the key.

156 Q. 17. Then do you find any structure in the Byers patent in which the draw-bar itself may be conveniently removed and replaced?

A. I do not.

Q. 18. Counsel for defendant now introduces in evidence the illustrative model of the Byers structure, marked Exhibit G.

By the Court: I thought that had been——

By Mr. Samuels: That has not been formally introduced.

By the Court: Would it be too expensive an instrumentality to use, in getting up, in making a Continuous System?

A. And would not be strong enough.

By the Court: And would not be strong enough. You would have to make it very strong?

A. Steel or wrought iron.

By the Court: Or wrought iron. Are not draw-bars castings?

A. Yes; malleable castings. I do not know but some of them are forgings, but I think they are mainly castings.

By Mr. Samuels: Counsel for defendant offers in evidence the United States Patent to Perry, 228,385.

By the Court: Referred to in your answer, as to the prior art?

By Mr. Samuels: Yes, your Honor.

By the Court: You propose to examine as to this?

By Mr. Samuels: Yes, your Honor.

Q. 19. Please examine the patent, and tell what it shows, having particular reference to the spacer casting.

A. I have before me a copy of the said Perry Patent. In the draw-

ings Fig. 1 represents a section through a draft rigging taken in a vertical central longitudinal plane. Fig. 2 represents a vertical transverse section of said draft rigging; and Fig. 3 represents, in perspective, a distance stop to be used between the followers of this draft rigging. I have also before me a model illustrating the
157 draft rigging forming the subject of the Perry patent, and, if the Court please, I will explain the structure from the model.

By the Court: Do you have the model of the Perry Patent?

A. I have.

By Mr. Samuels: Please mark the model Defendant's Exhibit K, for identification.

By Mr. Phillips: And offer it in evidence.

By the Court: Is this—springs, or followers——

A. Followers, draw-bar, and what might be termed cheek plates for the provision of limiting means to the travel of the followers. And has all the elements, all the essential elements of the modern draft rigging, although, as you will notice, the patent was granted in 1880. The drawings represent a light construction, because at that time the cars were of light construction. In the model of this Perry device the—(Model shown to the Court).

By the Court: There is your stop, as it says. Leads, or partial leads, springs——

A. The floor of the car is represented in the drawing by the letter "A."

By the Court: It does not call it draft rigging. It simply called it "bumper."

A. If your Honor please, that might lead us into confusion, somewhat, because the bumpers used have generally been attached in a different manner to the car from what the draft rigging was attached, and are attached to cars today.

By the Court: Well, that obviously relates to the same art.

A. Oh, yes, to the easing of the strain, of cars, on trains.

By the Court: To the easing of stress on the draw-bar?

A. Yes; yes, of course, in the bumper, when there was no
158 spring attached to the draw-bar, there was no easing of the stress, in starting or hauling, but there was the compact, when the cars came together.

By the Court: Well, it doesn't make any difference what you call it, except it is obviously of the same art.

A. For the purpose of easing the stress of the cars, in a train. Now, in this model there is what is known in the art as a tail pin, instead of a yoke.

By the Court: Now let us see that; let us see that. Where is what you call a tail pin?

A. The tail pin is this part——

By Mr. Neave: Marked "*g*."

A. Marked "*g*."

By the Court: Mr. Livermore will be here tomorrow morning?

By Mr. Neave: Yes, your Honor.

A. "*g*" which is fastened to the rear of the draw-bar proper. The

followers and the spring are strung on that tail pin, and held in place on it by means of a key. The removal of that key permits the removal of the followers, and the spring, and gives you the tail pin attached to the draw bar.

By the Court: The tail pin is a part of the draw-bar?

A. Is an extension of the draw-bar.

By the Court: Is a part of the draw-bar?

A. Yes.

By the Court: It is a draw-bar, in one sense.

A. Yes, as may be seen by the model which I recently showed of the Byers structure, the draw bars of today are provided so that the tail pin can be used in connection with them if desired. The hole in the end of the draw-bar, 2, of the Byers structure, is for the reception of a tail pin, the tail pin then taking the place of the yoke. In the Perry structure we have the tail pin.

159 By the Court: Let us see how that takes the place of the yoke?

A. The yoke.

By the Court: Is that what the yoke is for?

A. The yoke holds the followers in place, with springs between. The tail pin receives the followers, with springs between, the whole thing—so far as the draw-bar is concerned.

By the Court: The tail pin does the same thing on the inside that the yoke does on the outside?

A. Exactly.

By the Court: I see.

A. In each instance we must provide on the car some means for limiting the movement of the followers. In the Perry structure that means for limiting the followers is found in these side pieces, which are lettered "B," which are cut away, or provided with shoulders against which the followers 10 may rest. On the under sides, or under edge, of the side pieces or cheek plates B are secured strips, *d*, by means of rivets or bolts to retain the followers and springs and draw-bar, to hold this tail pin in position. We have here, in this structure *c*, which serves the same purpose as the distance piece 12, of the Byers structure, but because of the tail pin the distance piece is divided into two parts, and set at the sides, instead of between.

By the Court: Set at the sides.

A. Yes.

By the Court: It operates——

A. The same purpose, exactly. It is an illustration of how the changes are being run on the former structures in draft rigging, just as in all patented—in all devices of the present day, forming the subject of patents.

By the Court: That Perry Patent was in 1880?

A. In 1880.

By the Court: The cars were pretty heavy, then?

A. But nothing like the size of today.

160 By the Court: Oh, no.

A. The great furniture vans have come in since then, the

automobile vans, and the heavy steel cars, and the cars generally have very much increased in weight and size.

By Mr. Samuels: Counsel for Defendant offers in evidence United States Patent to Hinson, No. 635,322.

By the Court: This is the Perry Patent. (Indicating.) Now you have the Hinson Patent. Now go right ahead, right along as fast as you conveniently can.

Q. 20. Please tell what the patent described and shows, having particular reference to the spacer block and followers.

A. This patent to Hinson——

By the Court: It says in 1899.

A. Of 1899—shows a spring mounted head block or buffer, which buffer has in it two springs H, and a limiting stop, *g*, attached to a plate, C, reference being made especially to Fig. 4 of Sheet 2 of the drawings, which distance piece, *g*, saves the springs, H, as do the distance piece to which I have already referred in the Byers patented structure, and in the Perry structure.

By the Court: Have you a model of that?

By Mr. Samuels: Counsel for defendant offers in evidence model of the follower and spacer block, marked Defendant's Exhibit L.

Q. 21. Please describe the model, and explain it, with reference to the patent.

By the Court: Briefly, I can see it.

A. The model is made after the representation in Fig. 4 of the Hinson patent; and in Fig. 1 we see this distance piece, *g*, with the plate, *c*, and behind the plate, *c*, are the springs, H, resting against the sill, the forward sill of the car. When the horn of the coupler, *a*, is driven back, it engages the plate, C, and compresses these springs; the horn of the coupler, A, is shown in side elevation in Fig 3.

161 By the Court: Oh, yes, I see it.

A. When it is driven back it strikes this plate C forcing it back against the spring H, until the distance piece *g*, strikes the plate on the face of B, and stops the motion and saves the spring.

By the Court: Yes, I see. That was in 1899.

Q. 22. Does this patent show two springs and a follower engaging the ends of both springs, and having at the middle a stop projection, which separates the springs?

A. It does.

By Mr. Samuels: I offer in evidence the United States Patent to Frost, No. 532,272. Please examine the patent and explain what it describes and shows.

By the Court: This is the Frost patent?

By Mr. Samuels: Yes.

By the Court: 1895?

By Mr. Samuels: 1895.

A. This patent shows a draft rigging, in which a spring, "26," Figs. 1, 2 and 5, is located between followers 23 and 24—no, 24 and 25.

By the Court: No; 23 and 24.

A. 23 refers to the end of the——

By the Court: Oh, yes, I see, 25.

A. That is a little uncertain there, because of two reference letters leading to that.

By the Court: 23 seems to be the same thing as——

A. 23 refers to an opening in the draw-bar.

By the Court: Oh, yes.

A. Followers 24 and 25 are located in the opening 23 in the yoke C of this draft rigging. This yoke is shown as formed integrally with the forward portion of the mechanism, which mechanism has a coupler, A, for the reception of a coupling link, through the hole 10, Fig. 2, that will pass through a link entering the slot 11, Fig. 2.

In case they choose to couple the cars by means of the old
162 system of link and pin, in the event of the structure breaking down, in the matter of automatic connection, provided by the other features of this device, with which we have no particular interest in the present instance.

By the Witness: I refer to this end A with its hole and slot to identify that as the coupling end of the device.

By the Court: A device as late as 1895 of link and pin?

A. That was simply an expedient; in case the automatic device broke down, we might resort to the link and pin system.

By the Court: In this instance——

A. In this instance the coupling device is of a peculiar and intricate nature, which I do not think it is necessary for me to go into at present because it doesn't have anything to do with the buffing mechanism comprised in the follower plates and spring and yoke to which I have already referred.

The rods, 27, which appear in section in Fig. 1 and in side elevation in Fig. 2, are connected to the car and serve as the limiting means for the followers 24 and 25. These followers 24 and 25, are called opposing slides. See line 41, page 2.

By the Court: Two opposing slides, 24 and 25.

By the Witness: I will read, if your Honor please, the paragraph in which the description of those parts occur.

By the Court: Commencing with line 30?

A. Line 30 to line 46. "The draw-head and coupling sections are practically one casting or forging at the rear of the coupler, and the raw-bar section C (large) is made usually integral with the united portions of the draw-head and coupling sections at one side of the latter, the draw-bar section being so located that a line drawn through the draw-bar center will likewise pass approximately centrally between the draw-head B and the coupling section A. The
163 draw-bar section is provided with a slot or opening 23, in which two opposing slides, 24 and 25, have movement, and spring 26 being located between said slides."

By the Court: Slides being what are called followers?

A. Yes, sir. "The coupler is usually affixed to the car through the medium of clips 27, located at its draw-bar section, or any equivalent thereof may be used."

By the Court: What are those clips?

A. I take it they are "U" shaped irons bolted to the car. Just how that may be done, how that was intended to be done, I do not know. It isn't disclosed in the patent, but the inventor says that they may be of—that any equivalent means for them may be used to furnish limiting stops for the followers.

Here is a construction wherein the spring 26 may be removed vertically from below and then the followers taken down through the slot which contained the spring and the followers. I have before me a model illustrating that part of the device to which I have especially referred.

By Mr. Samuels: The model is offered in evidence as Defendant's Exhibit M Frost's yoke and followers and spring.

(Whereupon said model was received in evidence and marked accordingly.)

By the Witness (continuing): The model is intended to show simply the feature of the yoke, followers and springs, and has the coupler head attached to it, to the draw-bar for convenience of illustration and identification.

By the Court: This is rigid.

A. This is rigid, as shown by the drawings, the stops being limited to their travel by means of a bar 27. We have the strain of hauling taken up on the front follower, and the buffing taken upon the rear follower. Then, if the spring breaks, we take it out. It may be taken out and a new one put in. If a follower
164 breaks, they may be taken out and new followers put in, the followers being swung to the slide and dropped out of the slot 23.

As will be seen, there is a close analogy between the Byers structure, as represented in the model, Defendant's Exhibit G, with this structure of the Frost patent. In the Frost patent there is simply one spring shown as applied between the follower plates, but Byers himself says he preferably uses two, reserving the right to use one if he chooses. In drawing, the front follower strikes the stop 27, and the strain is taken up, and in buffing the rear follower strikes the stop, 27. The stop takes these, the front and rear followers, respectively. This is called a pocket (indicating). It is common in the art. You can see the followers, and the spring in the yoke itself is often called a pocket. It is rather a loose use of terms all through this patent.

Q. 23. Is not the use of the term "pocket" in the Byers' patent a special use of that term?

A. So far as my knowledge goes, it is. I do not recall another patent.

By the Court: The Court may adjourn until half past nine tomorrow morning.

(Whereupon an adjournment was taken to Friday, January 8th, 1915, at the hour of 9.30 o'clock A. M.)

THE NATIONAL MALLEABLE CASTINGS COMPANY et al.

vs.

THE T. H. SYMINGTON COMPANY.

January 8, 1915, 9.30 a. m.

Court met pursuant to adjournment.
Present, as before.

DELEBERT H. DECKER resumed the stand on behalf of Defendant and further testified as follows:

165 Direct examination (resumed) by Mr. Samuels:

Q. 24. Referring to the paragraph which begins on line 44 of page 1 of the specification of the Frost Patent, No. 532,272, which we were discussing, read the brief description of Figures 1, 2 and 5, and explain to the Court what these descriptions mean to you, in regard to the position of the yoke?

A. Figure 1 is a plan view of the improved coupler. Fig. 2 is a side elevation thereof, a portion of the side being broken away. Fig. 5 is a plan view of two of the draw-bars.

By the Court: What patent is this?

A. The Frost.

By Mr. Samuels: This is the same patent, your Honor, that we were discussing when we adjourned.

By the Court: The Frost Patent.

A. "Fig. 5 is a plan view of two of the draw-bars coupled, one coupling being at an angle to the other, the coupling out of alignment, being shown in straight position, in dotted lines."

The parts just quoted from the specification signify that the coupler shown in Fig. 1 has its draft rigging portion so located that the yoke portion is in a horizontal plane, the opening through the yoke being a vertical opening. Fig. 2, being a side elevation of the structure of Fig. 1, gives us a view of the side of the yoke portion C, in which the spring 26 and the followers 24 and 25 are located. In Fig. 5 we have the horizontal relation of these same parts as referred to in Fig. 1.

By Mr. Samuels:

25. Do you then find the Frost Patent to disclose a draft rigging in which the arms of the yoke are connected to the sides of the draw-bar, the followers arranged between the arms of the
166 yoke, said springs and followers being removable from below, independently of the draw bar?

A. I do find that construction in this patent. In this instance the yoke C is shown as formed integrally with the draw-bar portion of the device.

By the Court: What do you call the coupling dog, in this claim?

A. The coupling dog is marked 14; it appears on Sheet 1, in the several figures there.

By the Court: Fourteen, you say?

A. Yes, sir.

By the Court: I do not see it.

(Witness indicates to the Court.)

By the Court: Take the fixed plate, in the drawing, the end——

A. The coupling dog is at the end of the draw-bar, and is located so that the corresponding—or, the counterpart in the co-acting coupler shall be engaged with it, when the cars are coupled together. This is illustrated in Fig. 5 of the drawings, which shows the two couplers in engagement.

By the Court: Yes.

A. The end A of one coupler entering the part B, which is termed draw-head section, of the other coupler.

Q. 26. Referring to the line 43 to 46, page 2 of the specification, tell what you would understand to be any reasonable equivalent of the clips 27.

A. Stop plates secured to the car sills would be equivalent to the clips 27; or cheek plates provided with stops, in the usual manner, when cheek plates are provided, would also serve that purpose, of limiting the movement of the follower plates 24 and 25, taking the place of the rods shown in the patent at 27.

Q. 27. Is that your understanding of the meaning of the language of the patent? Why was this phrase introduced?

A. I understand the phrase in line 45 of page 2, "or any equivalent thereon," to mean that in place of the rods, or so-called
167 clips, they may be replaced by any of the usual devices for limiting the backward and forward movement of the front and rear followers, respectively.

Q. 28. Such cheek plates, which were intended to be used in this way, were well known at that time, were they not?

A. They were.

By Mr. Samuels: I offer in evidence a copy of the United States Patent to Frost, No. 510,854.

Q. 29. Please examine the patent, and tell what it discloses.

By the Court: That is another patent?

By Mr. Samuels: Yes, your Honor; it is almost the same thing.

By the Court: This was previous to the last patent. This is 1893. The last one was 1895.

A. This is another patent, to the same inventor, Cerman Frost, and shows modifications—Strike out "modifications,"—And shows a structure with respect to which his patent, previously referred to, presented modifications.

In this patent I have in hand, Frost 510,584, we have shown, in the several figures, at A, a draft rigging feature, comprising a yoke placed in a horizontal position—that is, the arms of the yoke being in the same horizontal plane, and within this yoke a spring, 26, and followers, 25. The limiting stops for the followers 25 are indicated at 24. In this construction, as in the patent to Frost previ-

ously referred to, the spring and followers are removable in a vertical direction from below, in the manner described by me in connection with the earlier Frost patent. In one form of the follower shown in this patent to Frost bosses project from the inner faces of the followers, for holding the spring 26 in position. This appears in Fig. 6—also indicated in Fig. 5,—of the Frost patent. There might be some difficulty in removing this spring, and its associate followers, with the projecting bosses, but in the structure shown in Figs.
168 1 and 2, where no bosses appear, the spring would be readily removable from below and the followers removable, after the spring had been removed, as described by me with respect to the patent previously referred to.

Q. 30. Does this patent show a draw-bar, a yoke, the arms of which are connected to the sides of the draw-bar, followers between the arms of the yoke, springs between the followers, these springs and followers being removable from below independently of the draw-bar?

A. It does.

By the Court: Are followers alluded to as slides.

By Mr. Samuels: They are called buffing slides, in this patent.

A. On page 2 of the patent the followers 25 and 26 are referred to in the following terms: "Between the yokes two buffing slides 25 are located, separated by a spring 26, the said slides and spring being adapted to take up and receive the buffing strain from the coupler."

By the Court: In the claim they are referred to as slides?

A. In the claim these followers are referred to as slides.

Note particularly line 4 of claim 3.

By Mr. Samuels: I offer in evidence a copy of the patent to Reagan, No. 491,785, Feb. 14, 1893.

Q. 31. Please examine the patent, and tell what it discloses.

By the Court: Have you a copy of this patent?

(Paper handed to the Court.)

A. Said patent to Reagan illustrates, in plain view, partially sectionized, in Figs. 1 and 2, draft sills B, on the opposed faces of which are bolted cheek plates A; these cheek plates are provided with inwardly extending stops "*r*"; resting against these stops and extending across from one cheek plate to the other are the front and back follower plates, "*l*," "*l'*." Between the follower plates is located the spring B. Embracing the follower plates and the
169 spring is a yoke D', shown in vertical section in Fig. 3 of page 1 of the drawings. This yoke D' is joined to the sides of the draw-bar B', by means of the key E, which key extends through slots in the end of the draw-bar and in the ends of the yoke, and is held in place by a cotter, "*x*". The forward ends of the yoke D' are turned back upon themselves at "*w*", to form shoulders for the ends of the key E.

On Sheet 2 of the drawings are several views of the cheek plates, which cheek plates are counterpart castings. We have a face view of one in Fig. 4, showing at the right and left ends the projecting

stops, "*r*", against which the ends of the followers are to rest when the parts are assembled.

To retain the spring in place, as well as to join the two cheek plates at the bottom, a plate C is provided.

By the Court: What would be called a tie-plate?

A. Yes, termed a tie-plate, which has tenone-"*o'*" at its forward end, for insertion in mortices or recesses, "*o*", in the end of the cheek plates A. At the other end of the cheek plates are lugs "*n*" which pass through holes in the end of the tie-plate C, lettered *n'*, a bolt being inserted through the lug *n*, to hold the plate up in place.

The object of the invention, as stated in lines 12-15, page 1, is to afford convenience "in separating the parts, and in their adjustment, as in removing a broken draft spring and inserting a perfect one in its place."

By the Court: I do not quite see how that tie-plate works, or what its place is.

(Witness indicates to the court.)

By the Court: Oh, yes.

By the Witness: There is. (Indicating.)

By the Court: There is the tie-plate, in Fig. 7. Now, there is a description—in Fig. 2—how does that work?

A. In Fig. 2 the tie-plate is shown in the plan, on the lower edge of the cheek plates, which appear in said figure, in section, at A.

170 By the Court: Yes.

A. The forward ends of the bifurcated tie-plate enter the sockets at the lower edge of the cheek plates, and at the rear lower edge of the cheek plates the lugs thereon enter the holes in the bifurcated rear end of the tie-plates.

By the Court: What is this? (Indicating.)

A. In this manner the two plates are in a sense tied together at their lower edge.

Another object of the invention is stated in lines 100-104, page 1, which read, "The separation of the parts may be readily accomplished without disturbing the draw-bar by simply withdrawing them backward after removing the pins referred to as sustaining the tie-plates."

Another statement to the same effect occurs in lines 24-26, of page 2, which read, "separation of the parts of the draft rigging may be readily accomplished without requiring the draw-bar to be disturbed." When these parts are removed, the draw-bar is maintained in place on what is known as the carrier plate, which appears in plan view in Figs. 1 and 2, being shown under the draw-bar in Fig. 1—draw-bar not appearing in Fig. 2.

The separation of parts referred to is effected by removing the cotter, "*x*", and the pin, "*e*" from below, then by drawing back the yoke D, it may be removed, and by taking down the plate C the spring may be removed vertically from below, and then the follower plates, "*l*" and "*l'*" may be swung free from the lower ribs, 4, on the cheek plates, and taken down from below. Does the Reagan Patent show a draft rigging having springs, followers, a yoke, be-

tween the sides of which the springs and followers are set, said springs and followers being removable vertically from below, independently of the draw-bar?

A. It does, with the one exception that it shows a single spring, instead of springs, the number of the springs being deter-
171 mined by the design of the draft rigging and by the strains which are to be sustained.

Q. 33. That is a question of capacity, is it not, of the springs?

A. A question of capacity.

By Mr. Samuels: Counsel for defendant offers in evidence the United States Patent to Simons, No. 627,540.

Q. 34. Please examine the patent, and tell what it shows and describes.

A. Said patent to Simons shows a draft rigging in which there are twin springs, located side by side, in a horizontal plane, twin followers, located in the same plane, and the followers and springs located in the cavity of the yoke, which is arranged in a vertical plane. This appears in the partially sectionized view of Fig. 1, where the yoke is represented in the vertical plane, and in the partially sectionized plan view of Fig. 2, where the springs and followers are located in the horizontal plane.

Fig. 3 is a vertical transverse section through the structure, showing the springs and followers and yoke in their relation to the draft sills, *l*, *l*, or in this instance, the draft sills are really the center sills of the car, it being a steel car structure, represented in this patent. To accommodate this draft rigging, the sills, *l*, *l*, have holes cut through them, that is through the web 9, of each sill, and in these slots are located the ends of the followers 3, 3′.

To furnish adequate bearing surfaces for the ends of the followers 3, 3′ angle bars 11 are bolted to the outside of the web 9 of the I-beams, and other angle irons 13 are bolted to the angle irons 11 to retain the followers in position, to prevent longitudinal movement of them, that is, such longitudinal, movement of them as would displace them from their working position. The yoke 15, it will be noticed, embraces the followers, and is riveted—or, is bolted to the end of the draw-bar 14, by bolts 16.

172 To remove the followers and springs from this form of draft rigging the angle 13 may be removed from one side, and the followers and interposed springs together taken from their position in the rigging, in a horizontal direction.

The parts would be replaced in reverse order, reversed manner, and the plates 13 bolted in place, completing the structure. Please take this model, and tell what it is. (Handing same to the witness.)

I have before me a model structure of the Simons Patent.

By Mr. Samuels: The model is now offered in evidence as Defendant's Exhibit N.

A. (Continuing)—which shows the two I-beams, *l*, *l*, with the registering slots through the web 9, and located in these slots are the follower plates, 3, 3′, and the interposed springs.

(Showing to the Court and indicating.) The follower plates have, on their opposing faces, bosses, which are extended, and by coming together would prevent the crushing of the springs.

By the Court: Thus taking the place, as far as they go, of what is called, in other patents, the——

A. The distance stop.

By the Court: The distance stop, yes.

A. They are, in effect, distance stops, on the faces of the followers, and are formed integrally, or are shown as bolted or riveted to the followers, in the patent.

By the Court: These? (Indicating.)

A. Bosses.

By the Court: Boss, right on the structure.

A. The draw-bar with its yoke, I have removed, and it shows the recess in which the followers and their springs may be inserted. The angles that I have referred to are shown in place on one side of the model, as illustrated in Fig. 2 of the drawings, which I have removed the angles 13 from one side of the model, in order to withdraw the followers and springs.

173 By the Court: Figure 3 is what?

A. Figure 3 is a vertical transverse section.

By the Court: Looked at in that manner. (Indicating.)

A. Yes.

By the Court: I see.

A. As though this were inserted in this. (Indicating.)

By the Court: Yes.

A. In the drawings there is a feature which is not on the model; that is to say, the T-beams 17, Fig. 3, which are, as the inventor states in his specifications, applied to give strength to the I-beams, to make up for any loss of strength due to cutting through the web 9.

By the Court: The webs? Show me those.

A. The webs of an I-beam are—the web of an I-beam is the thin portion extending from the upper ledge to the lower.

By the Court: Yes.

A. The resistance to draft strains and buffing strains is the same in this structure as in several of the others which we have discussed.

By the Court: That is a patent in 1899.

—. Patented, 1899. Simons Patent.

By the Court: Simons.

—. Simons Patent. The inversion of this mechanism from the horizontal position shown in the drawings, to that of 90 degrees thereto, gives, in effect, the Byers structure, so far as the vertical arrangement of the followers and the springs one above the other are concerned (Illustrating) and the horizontal relation, or the horizontal position of the yoke. If we were to rotate this device, through an angle of 45 degrees, above its longitudinal axis, we then remove the followers and their springs, from below, as we did in the model of the Byers structure, move it from below in that plane (indicating). Taking them out from the cavity, between the sides of the yoke.

174 By the Court: Not showing the same combination as the other,—in the precise manner?

A. It does not show the pocket, or box. It shows these, which are in a sense common property, because furnished by the different railway companies, and car shops, for insertion in the yokes of the various structures, made to receive the strains. They are, as is seen,—the followers and springs are removable vertically from below, without disturbing the position of the drawbar, when we have placed it in the position thus referred to (indicating) the draw-bar remaining in its place.

Q. 36. Take the model, Defendant's Exhibit G, remove the springs, followers and yoke from this model, and the model that you have, and compare them?

A. I have in my hand now Defendant's Exhibit G, the model representing the Byers' structure, and am holding it in the position which it occupied when placed upon the car; and have removed the lower plate 9, which holds the followers and springs in place.

I will now remove the follower plates and the springs from below in a vertical direction, and then withdraw the yoke from the box 3, which yoke is rigidly attached to the sides of the draw-bar. Now, I will take the model representing the Simons structure and rotate it through an angle of 90 degrees, along its longitudinal axes, and having removed the angles 13 from the then lower side——

By the Court: The angles?

By the Witness: The angles 13, which are—the angle bars 13——

By the Court: The angle bars, yes.

By the Witness: ——which hold up the follower plates in that position (indicating on model), or retain the follower plates in their place.

By the Court: Yes, I see.

By the Witness: And I will now remove from below the follower plates with their interposed springs in the same manner as with the other model.

175 I will now withdraw the yoke and draw-bar and place it by the side of that withdrawn from the Byers' model. Both show the yoke rigidly connected to the sides of the draw bar and the yoke arms in a horizontal position. In the Byers' structure we have between the springs the distance block 12, which is one form of distance stop described in the Byers' patent; while in the Simons structure we have the other forms of distance stop attached rigidly—or attached to the follower plate——

By the Court: The bosses?

By the Witnesses: Yes. These consist of the two bosses about which the ends of the springs are placed.

Q. 37. Then by merely turning the Simons patent—or rather the model of the Simons device—at an angle of 90 degrees, you have a draft-rigging having in combination with the drawbar a yoke, the arms of which are connected to the sides of the draw-bar, springs arranged one above the other within the yoke, and followers also arranged between the arms of the yoke, said springs and followers being removable from below independently of the draw-bar?

A. We have.

Q. 38. There is no question as to the possibility of removing them, the springs and followers, as shown in the Simons patent, is there?

A. None, that I see.

Q. 39. How are the connections with the angles 13 to the fixed parts of the draft gear described?

A. Referring to lines 63, 65, page 1 of the specifications, I find the words "secured to said angle irons 11 by means of bolts 12 are the guides 13 13 for the follower plates 3 3 prime."

Q. 40. Referring to the question of removability of this, how do you regard this description and the illustration?

A. The description and illustration show how the follower plates and springs may be removed from their position in the yoke,
176 wholly independent of the draw-bar.

By Mr. Samuels: Counsel for the defendant offers in evidence a copy of the United States Patent to Miner, No. 570,038.

Q. 41. Please examine the patent and tell what it discloses?

A. Said patent to Miner was granted in 1896. It shows a draft rigging in which the draw-bar is represented at B, the yoke at C, bolted to the rear end of the draw-bar by bolts *c c*. It has springs *d d* prime arranged in tandem—as the term is used in this art—one spring being placed ahead of the other, their axes being on the same line, and that line in the present instance a horizontal line.

The yoke in this instance is made up of an upper and lower plate, which plates are bolted together by the bolts *c*, as clearly indicated in Fig. 2 of drawing, which is a vertical longitudinal section through the center of the draft rigging. This bolt—one of these bolts *c* appears in full in Fig. 5 on the second sheet of the drawings, where it connects the upper portion *c* of the yoke with the lower portion *c* of the yoke.

The followers in this structure are lettered F, F prime, F-2, F-3, and between these followers are located the springs D and D prime, respectively.

To furnish limitation for—to the movements of the follower plates, independent cheek plates are provided and bolted to the draft sills, which draft sills appear at A. These cheek plates are lettered G, and on their opposed faces in transverse alignment with each other are ledges or lugs, against which the ends of the follower plates bear. These lugs appear at *g*, small, *g* small prime and *g* small 2.

By the Court: The lower figure?

By the Witness: It may be seen clearly in figure 3.

By the Court: The lower figure?

177 By the Witness: The lower Figure of sheet 1. Between—strike out "between"—upon the follower, plates at their center—centers—are bosses *f*, small, to which the springs are centered. To the lower edges of the cheek plates *g*, as clearly seen in Figs. 4, 5 and 7 of sheet 2 of the drawings, are bolted retained plates *g*-2, G large 2, to hold the followers in position between the cheek plates.

By the Court: I don't get that quite. Have you a model of this?

By the Witness: Have we a model of this structure, Mr. Samuels?

By Mr. Samuels: I do not think so.

By the Witness: The retaining strips to which I have just referred, are shown in transverse section in Figs. 4 and 5. They appear in edge view in the figure 6 at the lower ends of the lugs G, G prime and G-2, which furnish the stops for the follower plates——

By the Court: For the springs?

By the Witness: Between which the springs are. As seen in Fig. 3, these lugs, G small,—cross section—project towards one another.

By the Court: Yes, I see.

By the Witness: And against them rest the ends of the follower plate F.

In action, a buffing strain would be resisted by these springs, the draw bar carrying back the follower plates against the action of the springs.

In the draft strain, the yoke bearing against the follower plate will draw—the rear follower plate will — it forward and compress its spring, and by drawing forward the lug C prime will compress the spring in advance of the follower plate F prime.

By the Court: Have you the model?

By the Witness: Have we a model, Mr. Samuels, of this?

By Mr. Samuels: We have no model of that.

By the Court: There would be more elasticity this way on that (indicating on drawing)?

178 By the Witness: This patent was taken out on the advantages of the tandem spring and the arrangement of springs.

I notice that claim 2 specifies a particular combination in tandem spring draft rigging.

The Court: Are these various patents as shown in the patent office in imitation of each other in any way?

A. I do not recall the history of the Byers patent as shown in the file wrapper. I think that——

By the Court: You haven't the file wrapper here?

By the Witness: —will probably be produced, the file wrapper and contents of the Byers' structure.

By Mr. Neave: We have here, your Honor, certified copies of the file wrapper, which we propose to put in.

By the Court: When you come to it?

By Mr. Neave: Yes, your Honor, would you look at it now?

By the Court: No. I will take the things just as they come along.

By the Witness: In this Byers' structure, which we are now discussing arrangements are made for removing the——

By the Court: You called that the Byers' structure?

By the Witness: I misspoke myself in that statement. Make that read "Miner patent" instead of "Byers."

The arrangements are made for removing from the draft rigging the springs and followers in a vertical direction from below. This removal is effected by taking off the nuts on the lower ends of the

bolt C small, thereby taking down the lower portion of the yoke which is lettered C. Then by removing the nuts from the lower ends of the bolts which hold up the retaining plates G-2, as seen on the second sheet of the drawings, the follower plates, with their interposed springs, are freely removable vertically from below.

179 By Mr. Phillips:

Q. Please quote the portion of the specifications which you consider supports your statement that the springs and followers are freely removable from below? (Handing papers to witness.)

By Mr. Neave: Mr. Samuels, is this another patent?

By Mr. Samuels: This is the same patent.

By the Witness: The removability of the guide plate G-2 attached to the lower edge of the—of each cheek plate, or as is termed in the patent here "draw-bar stop casting," is specified in lines 20, 25, page 2, "each of these stop——

By the Court: What lines?

By the Witness: Lines 20 and 25, page 2. "Each of these stop castings is provided with an upper integral guide G prime, and a lower removable guide plate G-2, between which the followers reciprocate, and by which the followers are guided and supported."

With respect to the removability of the lower portion of the yoke, I refer to page 1, lines 66, 72, which read: "C," the draw-bar extension, the same being preferably in the form of separate and lower pockets, straps or extension plates adapted to fit above and below the followers, instead of in the form of a single stem or rod extending centrally through the followers."

The stem or rod there referred to being the old form of tail pin.

Q. 42. Then you find the followers to be supported upon the straps G-2 and the bottom arm of the yoke C, and both of these parts removable, do you not?

A. I do.

Q. 43. Do you then find the Miner patent to include a draw-bar, a yoke, the arms of which are connected to the sides of the draw-bar, springs within the yoke, and followers also arranged between the arms of the yoke, said springs and followers being removable from below independently of the draw-bar?

A. I do.

180 By the Court: Have you some more of the prior art there?

By Mr. Samuels: Counsel for defendant offers in evidence United States Patent to Pilcher 616,965.

Q. 44. Please examine the patent and explain particularly the spring arrangements which you find therein?

A. The Pilcher patent was granted on January 3, 1899. It shows various arrangements of springs for use in draft gear. In Fig. 1 we find twin springs arranged one above the other between follower plates 10, which plates as shown in Fig. 7 bear at their ends against lugs projecting towards one another from the cheek plates 6 that are secured on the opposing faces of the draft sills 1.

Fig. 3 is a vertical transverse section through the structure shown

in Figs. 1 and 2 representing these springs 11 11 prime, one arranged above the other, as described by me.

Fig. 4 is a vertical axial section through the draw-bar 5, and the follower plates 10 and springs 11 prime. And we find in Figs. 6 and 7 a representation of three springs placed side by side, one above the other, Fig. 7 representing a face view of one of the follower plates seen in Fig. 6 upon which appear the bosses 106, to which the springs 11 prime are centered.

In Figs. 8, 9, 10 and 11 we find represented twin springs arranged side by side for use in a vertical or horizontal position, and in Fig. 12 we find a tandem arrangement of twin springs.

Q. 45. I hand you a copy of the drawing annexed to the interrogatories filed by the plaintiff and answered by the defendant; please take this drawing and compare the structure to the structure of the Byers' patent.

A. If Your Honor please, this is the blue print referred to, attached to the interrogatories, and this is a copy of the Byers'
181 patent in suit. We have in this blue print—I would like to mark this blue print as I refer to it, in order to make my description of it more clear.

Q. 46. Please do so.

The Court: You may do so, but call attention to it, so that it will show what marks you made and what marks originally were on the blue print.

By the Witness: I will make these marks with the yellow pencil which I have in hand.

By the Court: Very well.

By the Witness: There being no previous yellow marks on the blue print, and I will follow as nearly as possible——

By Mr. Phillips: Just a moment; we will see if we cannot find a duplicate of it.

By the Court: Isn't that the original drawing here?

By Mr. Neave: No, that is not the drawing. Here it is.

By the Court: I do not see any objection to marking it with the yellow pencil.

By Mr. Neave: No objection. That particular copy is not the exact Exhibit in the case, that is just their copy of the original.

By Mr. Phillips: I thought we had the original.

Mr. Neave: This is the original.

By the Court: Let him mark it with the yellow pencil.

Mr. Neave: No objection.

Mr. Phillips: It would save confusion to put it on the original, I think.

By the Court: On the original?

Mr. Phillips: Yes.

By the Court: Yes, perhaps so.

Mr. Phillips: Put it right on the original, that is the best thing to do.

By the Court: We will take a recess for a minute.

(Short recess.)

182 By the Witness: Continuing my answer from the word "Following"—as nearly as possible the reference characters as applied in the Byers' patent in suit, for the sake of clearness in making this comparison. The figure which I designate, Fig. 1 of the blue print, represents a face view of one of the cheek plates lettered A in red on the blue print, bolted to a plate or draft sill attached to—after draft sill insert "100"——

By the Court: In yellow pencil.

By the Witness: Marked in yellow pencil, as all my marks will be——attached to the car sill 101.

By the Court: As marked by you.

By the Witness: As marked by me. Between the stops of the cheek plates A, which stops I mark 5, are seen the follower plates which I mark 6 6 prime. Between these follower plates are the springs, arranged one above the other, which I mark 7 7, and between these follower plates we see a longitudinal central section of the limiting piece lettered in red on the blue print, and with the capital B, and by me numbered 12, to correspond with the modified form of the distance piece, which appears in the Byers' patent at Fig. 9.

The figure immed-ately under Fig. 1 of the blue print I will give the caption Fig. 2. This is a view showing partly in plan and partially in section the draft rigging illustrated by this blue print.

The car sills 101 appear at the upper and lower edges of this figure, and to these are seen riveted independent counterpart castings A, as already referred to in red on this blue print.

In this figure the yoke 2 prime, as marked by me, is seen embracing the followers 6 6 prime, between which appear the springs. This being a plan view, but one of these springs appears, namely, the upper one.

Immediately below Fig. 2 we find details of the follower plate 6, and of the yoke 2 prime; and next to the details of the follower plate are details of the carrier plate, which spans the draft
183 sills below the springs and followers, and is seen in section in Fig. 1 in that position.

At the right of Fig. 1 we find a transverse vertical section through one of the draft sills and car sills, with the cheek plate A attached thereto and a section of the distance block B, the cheek plate being marked with a red A and the distance with a red B.

Details of the rear end of the draw-bar appear at the lower left—lower right hand corner of this blue print.

By the Court: Will you mark that?

By the Witness: I will mark these two as I have marked them in Figs. 1 and 2.

The key by which the yoke is attached to the draw-bar is seen in detail and lettered on the blue print "yoke key," being a plan view and end view shown of the same at this portion of the blue print, the key appearing in Figs. 1 and 2 at—as marked—at 103—as marked by me.

By the Court: Is that the yoke here (indicating)—is that the same as this (indicating on drawing)?

By the Witness: The yoke key—this key being the same as that represented over the term "yoke key," lower right hand corner of the blue print.

Now, I will compare the structure shown in the said blue print with the structure of the Byers' patent. In the structure of the Byers' patent, we have in each view a cast iron pocket 3, which is attached, or attachable at its sides to the draft sills or sills of car, but no such box appears in the blue print in question, in the Byers' structure the box containing bearing surfaces for the followers. In the blue print such limits or bearing surfaces are on the cheek plates A, which appear at the—attached to the draft sills. The stop surfaces of these cheek plates receive the ends of the followers. In the Byers' patent the stop surfaces, which are described as lugs extending from one side of the pocket to the other, receive the upper and lower ends of the followers. In this blue print the yoke is shown which is slotted at its ends to receive a readily re-
184 movable key that extends not only through the slots in the yoke, but through the slot usually provided in the rear end of the draw-bar, and also through slots in the draft beams to the outside thereof, to provide for the ready removal and insertion of this key.

In the blue print I do not find distance pieces formed integrally with the follower plates and projecting between the springs as claimed in the Byers' patent, but I do not find the older—the old alternative form described in the Byers' patent and illustrated in Fig. 6 and not claimed by Byers, which distance piece is that marked B in red on the blue print and shown in Fig. 1 and in the cross-section at the right Fig. 1.

I find in the blue print a carrier plate which is bolted to the under side of the draft sills for the purpose of retaining the springs and followers in place, and that has its counterpart in one respect in the plate 9 in the Byers' patent, which plate is connected to the lower edge of the box, however, and not to the draft sills, but does serve the purpose of holding the springs and followers in place.

I have before me two cheek plates which have already been entered as Defendant's Exhibits H and I, representative of the cheek plates shown in this blue print. On these exhibit models there are the lugs, which I will mark on the model as "5," against which the ends of the follower plates have their bearing, when these cheek plates have been bolted to the draft sills or sills of the car.

We then have in the blue print a structure for receiving and holding in operative position the follower plates and springs, said structure consisting of simply two independent counterpart castings, having lugs extending vertically across their faces—in vertical line across their faces, for limiting the movements of the follower plates, while in the Byers patent we have a cast iron box to be located between the draft sills or sills of the car, and it has extending transversely across it at top and bottom what are termed in
185 the Byers patent as lugs, against which the upper and lower ends of the follower plates bear.

There are other minor features of difference, but unless counsel desires further explanation I will close my answer here.

Q. 47. Do you find in the structure illustrated in connection with the interrogatories any pocket or box as set forth in the Byers patent and claimed therein.

A. I do not.

Q. 48. Do you find in the structure shown in connection with the interrogatories a follower having a stop projection?

By the Court: A what?

By Mr. Samuels: Follower having a stop projection.

A. I do not.

Q. 49. Do you find any assembly of yoke, spring, and followers, such as illustrated in any of the different figures of the patent?

A. I find no assembly in which there is a rigid or fixed connection between the draw-bar and the yoke.

Q. 50. You consider, do you not, all the connections shown in the Byers patent, between the yoke and draw-bar, to be rigid?

A. I do.

Q. 51. Examine this model and tell what it would illustrate. (Handing model to witness.)

By the Court: Model marked? Model of what? Stops?

By Mr. Samuels: Model of spacer block, substantially as shown in the drawings in connection with the interrogatories, and Defendant's Exhibit O.

A. Defendant's Exhibit O is the model of a spacer block which corresponds to the spacer block illustrated in Fig. 1 of said blue print, and the transverse section at the right of Fig. 1. This part is that which is placed between the springs and located longitudi-
186 nally between the followers to limit the approach of the followers to one another.

By the Court: Limit the action of the spring?

A. Yes, sir.

By Mr. Samuels: Counsel for defendant offers in evidence copy of the patent to William H. Emerick, No. 693,643.

Q. 52. Please examine the patent and tell what it covers.

By Mr. Neave: Your Honor, I understand this is a patent—as the patent is not a part of the prior art I object to it, if they are using it in any such sense as that.

By the Court: For what purpose do you offer this patent?

By Mr. Phillips: This patent is introduced to show that the device which these plaintiffs claim to have made, and the only one which they claim to have made, is made under this later patent, which belongs to the defendant, and under which suit has been brought against this plaintiff in Chicago, and the patent held to be infringed.

By the Court: In a Federal Court?

By Mr. Phillips: In an art of this character. The fact that there is sufficient difference between the alleged infringing device and the patent to support a patent has been held by many courts to constitute conclusive proof of non-infringement; that there is patentable distinction between the alleged infringing device and the device of the

ment; that the fact that there is difference enough in this crowded art between the structure of this patent and the strucure which is alleged to infringe, to support a patent, has been held to constitute evidence of non-infringement.

By the Court: You claim it is evidence tending to show non-infringement?

By Mr. Phillips: Tending to show non-infringement, be-
187 cause it shows that there is an important and characteristic difference between the two structures, which has been considered sufficient to support a patent.

By Mr. Neave: Your Honor, Mr. Phillips, in his statement just now, I believe, said this was in suit, this Emerick patent was in suit at Chicago, against the plaintiff here. He did not mean that.

By Mr. Phillips: I beg your Honor's pardon. The suit is against Mr. Miner, who, as the testimony shows, is the sales agent of——

By Mr. Neave: Not sales agent at all.

By Mr. Phillips: Who sells.

By Mr. Neave: Who sells.

By Mr. Phillips: The defendant's device—I mean, the complainant's device, the device which is complained of here, which is the same device which was complained of at the time.

By the Court: (Addressing Mr. Neave): You object to the introduction of this?

By Mr. Neave: Not if he is doing it for that purpose. I do not agree with Mr. Phillips on the law.

By the Court: I cannot tell what view I take of it; whatever view I may take of it, it clearly ought to be in the record because the cause will go up to the Court of Appeals.

By Mr. Neave: I understand this patent is produced not as a part of the prior art?

By the Court: No.

By Mr. Neave: But merely to illustrate the defendant has a patent covering——

By the Court: As tending to show non-infringement.

By Mr. Phillips: May it please your Honor, there is a further fact in connection with this patent that there is evidence of in the record, in the shape of affidavits or depositions which were taken de bene and have been filed, to carry the date of this patent back of the date that the patent in suit and back of the filing date of the
188 application which eventuated into the grant of patent. We offer the patent in two ways.

By the Court: You mean by further evidence you intend to show that it is not prior patented art, but is in fact prior art?

By Mr. Phillips: Prior art; prior invention.

By the Court: Prior invention.

By Mr. Samuels: Yes.

By the Court: Although not prior patented art.

By Mr. Phillips: Not prior patented art.

Mr. Samuels: We offer it in both ways.

By Mr. Phillips: This is generally called carrying the date of the invention back. The evidence is in on that feature of the case.

By the Court: It will be admitted. It is objected to on the ground of bearing on the question of infringement.

By the Witness: Did you complete your question?

By Mr. Phillips: Please read the question.

By Mr. Samuels: I offer in evidence a certified copy of the decision of the court in the case of T. H. Symington Company vs. Wm. H. Miner, Equity No. 30,700, the Northern District of Illinois, Eastern Division.

By the Court: Published in the Federal Reporter? What number?

Mr. Samuels: Relating to the Emerick Patent, No. 693,643, dated February 18, 1902.

By the Court: Federal Reporter what?

By Mr. Samuels: The citation is not on here. It is October 22, I believe.

By Mr. Neave: I object to that, your Honor, as incompetent and immaterial. It is not a suit between the same parties. It does not show the record upon which that decision was rendered; further, it is a very incomplete showing of what the Chicago case was. Of course, we will all read the opinion. There is no reason in the
189 world why your Honor should not, but I want to save my rights on their offering it as an exhibit, because it is not binding on this plaintiff in any way.

By the Court: I think he may be right about that, Mr. Phillips.

By Mr. Phillips: It shows this patent has been adjudicated as a valid patent, and it further shows that this same structure which is involved in the present suit, which your Honor has called the pending structure, was held to be infringed.

By the Court: Well, I might as well have it in. Let it go in de bene.

By Mr. Neave: That also does not show that an appeal is pending, which is the fact, as I understand it.

By the Court: The fact appears, then, that this is a memorandum of opinion that has been appealed from?

By Mr. Neave: Yes, your Honor.

By the Court: It may be admitted de bene. That fact appearing, that it is the opinion of a Court that has been appealed from, and is now in process of being appealed. Proceed.

By the Witness: Give me that question, please?

(Question read.)

By the Court: This is 693,643? (Indicating.)

A. Yes, sir. This patent illustrates a draft-rigging in which cheek plates 10, 11, Fig. 2——

By the Court: Page 2?

A. Fig. 2, page 1.

By the Court: Yes.

By the Witness: (Continuing former answer.) Are secured to the opposing faces of draft sills 8 and 9——

By the Court: Yes.

A. —and these cheek plates have upon their faces stops 30 and 31, Fig. 4, which project toward one another from the respective

patent has been held to constitute absolute proof of non-infringe-
cheek plates and furnish the limiting stops or lugs for the followers 22 and 23.

Embracing the followers is the yoke 21, whose forward
190 arms are slotted for the reception of a transversely located key 17, Fig. 2, which also passes through the usual slot in the rear end of the draw-bar 20. This key 17 also extends through slots in the sills 8, 9, which slots are represented in Fig. 2 at 18, 19.

To the lower edges of the cheek plates there are attached retaining strips 28, to hold the followers in place. These strips and their functions appear more clearly on sheet 2 of the drawings in the vertical transverse section seen at page 5. This section also shows how the cheek plates 10, 11 are secured to the draft sills 8. By removal of the plates or strips 28 from the lower edges of the cheek plates 10, 11, the followers and springs may be removed from their position in the opening formed by the yoke. This would appear not as effective—as not being affected without removing the key 17 in order that the yoke might be pushed back slightly so that the nuts on the ends of the bolts 24, 25, as appear in Fig. 4, sheet 1, may clear the yoke. Were the distance pieces, which are shown in Fig. 4, in the cores of the springs to be formed integrally with one or the other of the follower plates, these bolts would then not be necessary and the removal of the key and pushing back of the yoke would not be necessary in the taking down of the follower plates and springs.

In this draft rigging provision is made not only for the ready removal of the follower plates and springs, but also the ready removal of the yoke and the draw-bar. The follower plates and springs and also the yoke may be removed without removing the draw-bar, the same being left to rest on its carrier when these other parts are removed, or the draw-bar may be removed without removing any of the other parts, if that should be the part broken and necessary to be removed.

The plates shown at 32, 33, in Fig. 1, at the ends of slots 18 and 19, are for the purpose of preventing the displacement of the key 17 from its position.

Q. 53. You have stated in this record that you testified on
191 behalf of the plaintiff in the case of the T. H. Symington Company versus William H. Miner, in Chicago. Please state whether the structure in suit in that instance resembled the structure illustrated in the interrogatories offered by the plaintiffs in the present suit.

A. It did. The cheek plates or counterpart castings there offered were substantially identical with those illustrated in the blue print referred to, and that attached to the interrogatories in this suit.

Q. 54. Please take this model, Defendant's Exhibit H, compare it with the claims of the Emerick patent. (Handing model to witness.)

By Mr. Neave: I object, your Honor. It seems to me that is an entire waste of time, besides being incompetent. The witness is asked to compare a certain structure with the claims of the Emerick patent. Your Honor can do that much more effectively than the witness can.

By the Court: I do not think that is sufficient. While, logically, it is, you ask an expert many things that it is the province of the court finally to decide.

By Mr. Neave: This is also asking beyond that, Your Honor, it is asking this witness to construe claims of a patent that is not a patent in suit. These are the claims of the Emerick patent.

By the Court: Now, the question—what is it you asked him?

By Mr. Samuels: We are asking the expert to compare with the claims of the defendant's patent a structure.

By the Court: Of the Defendant's Patent?

By Mr. Samuels: Yes. This is the Emerick Patent, and our patent under which we are manufacturing.

By the Court: Is this Emerick Patent the patent you are seeking——

By Mr. Samuels: We offer it as a defense, showing that the device——

By the Court: This patent is constructed—your device, your machine, your device?

192 By Mr. Phillips: Under construction as shown in our own patent.

By the Court: On the Emerick Patent?

Mr. Phillips: On the Emerick Patent.

Court: Is that your patent?

Mr. Phillips: That is our patent.

Court: So that you are defending on the Emerick patent.

By Mr. Phillips: On the Emerick patent.

By the Court: Oh, yes; I didn't quite get that in my mind before. You defend on the Emerick Patent?

By Mr. Phillips: That is it.

By the Court: So that brings sharply before me the two patents?

By Mr. Phillips: The two patents.

By the Court: The Byers Patent and the Emerick Patent.

By Mr. Phillips: And the Emerick Patent.

By the Court: Your question is what?

By Mr. Samuels: This cheek plate has been admitted——

By the Court: Cheek plate what?

By Mr. Samuels: This model (indicating).

By the Court: That you are using in your device?

By Mr. Phillips: That we are using in our device.

By Mr. Samuels: It has been admitted by the expert on the other side as being a direct——

By the Court: You are asking what?

By Mr. Samuels: I asked him to compare this with the claims of our patent.

By the Court: You asked him to compare this with the claims of the Emerick patent?

By Mr. Samuels: Yes.

By Mr. Phillips: Yes.

By the Court: Yes, I should think that must be received.

By Mr. Neave: It really doesn't make much difference, your

Honor. We will get into the question of law here, and the
193 construction of terms, and I should suppose, if your Honor wishes such a comparison made, you would have a comparison made between what is shown in the Emerick patent and this device.

By the Court: In a patent case I always have to do this. Even though I may be in some doubt, I always have to get it in the record. It may be that it will be shown later—even if the Court does err, I must, if any, err on the side of letting it into the record, I think I must allow the testimony.

By Mr. Samuels: I shall withdraw the question, your Honor.

Mr. Phillips: And change the form.

By the Court: Change the form.

By Mr. Samuels: And ask the witness to compare structure of the interrogatories, with the model, if necescary, with the structure disclosed in the Emerick patent.

By the Court: That is in conformity and in the line of the suggestion of the learned counsel. That makes it better. He may answer.

A. Your Honor, if I may refer to the blue print attached to the interrogatories——

By the Court: Yes.

A. (Continued:) The model, Defendant's Exhibit H, represents a cheek plate of the form found in the blue print attached to the interrogatories. Referring to the transverse section at the right of Fig. 1 of the said blue print, we find a seat for the sides of the yokes, and this section also shows the manner in which the cheek plate is bolted to the draft sills. Fig. 1 shows a face view of the model cheek plate with the lugs 5, bearing against—furnished to bear against or receive the followers 6, 6 prime of the blue print.

By Mr. Neave: Your Honor, was not the question to compare that structure with the things shown in the Emerick patent? He isn't doing that at all.

194 By the Court: He changed his question. He was going to show what he thought was your suggestion, to compare it with the blue print.

By Mr. Neave: Mr. Samuels, isn't the question to compare that model with what is shown in the Emerick patent?

By Mr. Samuels: That is the question.

By Mr. Phillips: To compare the model and interroga-ries with the structure shown in the Emerick patent, compare the interroga-ries with a model, if necessary.

By the Court: This is the model signified by the blue print. Now, it is to compare that with the Emerick patent?

By Mr. Samuels: That is the question.

By Mr. Neave: You might save time by going ahead and comparing it with the Emerick patent.

By the Court: Yes.

By the Witness: I was following the question for the purpose of first identifying this model with the blue print, and then illustrating.

By the Court: Well, you have done that, briefly.

By the Witness: Yes. Now, referring to the Emerick patent and comparing the model, Defendant's Exhibit H, which is the model of a single cheek plate, I find in the patent cheek plates which are referred to by the numerals 10 and 11, upon the faces of which are projections 30 and 31, those numerals appearing particularly in Fig. 4. And these projections furnish the limits for the followers 22 and 23, of the Emerick structure.

There is this difference between the cheek plate of Defendant's Exhibit Model H and the Emerick structure, namely, in said model a portion of the space between the projections 5 has been filled along the edges of the plate, leaving a channel between the upper and lower pairs of stops, 5, in which the yoke may especially lie. This channel, however, exists in the Emerick structure, between the stops
195 or projections 5, and the filling is not between those stops—between the horizontal pairs of stops; in other words, in the Emerick patented structure the rear face of the channel for the yoke is in the same plane as the rear face of the space between the stops 5 of the Defendant's Exhibit, structure H.

The Emerick drawings show this plate at the rear—strike out "at the rear"—at the sides of the yoke, in Fig. 2, as coalescing with—strike that out, "show this plate" and what follows show—show the face of this plate as in one plane, at the back or side of the yoke and at the edges of the follower. That is to say, by the omission of the filling strip, which appears here longitudinally extending from the projections 5, the Emerick structure would more clearly appear. In an operative sense, we have the Emerick structure here, inasmuch as these stops or lugs 5 provide limiting means for the travel of the follower plates, just as in the model Defendant's Exhibit H. We have, in these lugs, the limiting, or limits, vertical limits of the yoke, which lies between them, in the Emerick structure, the same as in the Defendant's Exhibit H.

There are some minor differences in the structure of the Defendant's Exhibit H and that of the Emerick Patent, which result from the development of the plates 10 and 11, of the Emerick patent, in putting those features into actual practice, such features consisting of strengthening ribs, and reduction of weight by coring, or hollowing out, at the back, and the extension of these ends of the plates, and battering them, or chamfering.

I consider the Exhibit H. Defendant's Exhibit H, as representing the commercial form that the cheek plates of the Emerick Patent would assume, in putting the Emerick patent in use.

By the Court: Is that your answer?

A. That is my answer.

By the Court: Your model is Defendant's Exhibit G, is it?

—. ——.

196 By the Court: No; but your model of your structure, what is called the offending machine, what the plaintiff calls the offending machine, is your Model G, your machine?

By Mr. Phillips: No, your Honor.

By the Court: What is it?

A. These two. (Producing parts.)

By Mr. Phillips: Under the old practice we should have filed a demurrer to this bill, but what we are accused of doing is making——

By the Court: I understand.

By Mr. Phillips: —these two cheek plates (indicating), and this (indicating another part).

By the Court: Yes.

By Mr. Phillips: Not the machine at all.

By the Court: But contributory.

By Mr. Phillips: Contributory infringement.

By the Court: Yes. Now, you introduce a model, G, don't you?

By Mr. Samuels: Our Model G is the Byers structure.

By Mr. Phillips: Our Model G is the Byers construction.

By the Court: It is the Byers construction?

By Mr. Phillips: It is the construction of the patent in suit.

By the Court: Oh, yes. You do not put in the model of your whole——

A. The Emerick.

By the Court: The whole machine?

By Mr. Phillips: No, your Honor.

By the Court: Well, he has answered that. Then, your substantial answer is that, as far as those cheek plates are concerned, they are substantially the cheek plates of the Emerick patent?

A. Yes, sir.

By Mr. Phillips: Yes.

197 By the Court: As far as putting to commercial use?

By Mr. Phillips: Putting to commercial use.

Q. 55. Do you find, in the blue print annexed to the interrogatories, a draft rigging for cars, comprising side sills, independent counterpart castings mounted upon the opposed faces of said sills, said castings provided with shoulders, and having co-operating longitudinal extending seats or ways in the opposed faces thereof, follower plates arranged to be received between said castings, and operating between said shoulders, the ends of said plates extending into and working in said seats or ways, springs interposed between said plates, a draft yoke loosely seated between said castings and arranged to straddle said plates, a coupler arm, and a removable key for connecting said coupler arm to said draft yoke and sills, as and for the purpose set forth?

By Mr. Neave: Now, your Honor, we have gotten back——

By Mr. Samuels: Cancel the last, "as and for the purpose set forth."

By Mr. Neave (continuing): He has read, I believe, a claim of the Emerick Patent, and he has come right back to where he branched off from.

By Mr. Samuels: I am not asking him to explain or construe the claim, but merely if he finds those features, in the blue print.

By the Court: Why do you object? What do you observe?

By Mr. Neave: I should not think that would help your Honor at all. He has compared the structures.

By the Court: Yes.

By Mr. Neave: It does not make any difference what the claim is.

By the Court: Logically, I do not know but you may be correct, but we use experts—experts are always allowed to do that in patent cases.

198 By Mr. Neave: If your Honor wants to, I cannot object, of course. My objection was based upon the feeling that it was not what the courts wanted, now.

By the Court: I am not at all certain, but logically you are entirely correct, as to that view; but, as a matter of practice, in the trial of patent cases, we do allow experts to state, to go over exactly what is finally for the court to decide.

By Mr. Neave: Very well, I do not want to take up your time in discussing it.

By the Court: While philosophically I am inclined to agree with you, yet following what we always do in patent cases I think I will allow him to answer it. He may answer.

By Mr. Neave: Very well.

By the Court: Of course, it is entirely true that he is doing what the court finally has got to do and what it is his duty to do. Still, I think it does not do any harm to answer.

By Mr. Neave: Very well.

A. I do.

By Mr. Samuels: Direct examination closed.

Cross-examination by Mr. Neave:

Q. X 56. Mr. Decker, will you please turn to the Frost Patent 532,272?

By the Court: Is that the 1895 patent?

By Mr. Neave: The 1895 patent, your Honor.

By the Court: The patent first introduced?

By Mr. Neave: Yes, your Honor.

Q. X 57. It is true, Mr. Decker, is it not, that in this device, as it is shown in the patent, there can be no effective buffing action, at all?

By the Court: No effective—what kind of action?

By Mr. Neave: Buffing. Buffing action.

By the Court: Oh, yes.

199 By Mr. Neave:

QX. 58. That is, when a buffing action takes place, the coupler and the draw arm move toward the right, as we are looking at the drawings, or try to move toward the right, but immediately come up against the clips 27, so that it cannot compress the springs, and move the follower to the right? That is true, is it not?

A. In the figures 1 and 5, one of the stops 27 is shown immediately in the rear of the draw-bar portion A, and would apparently limit the rearward movement of the draw-bar.

QX. 59. So that there would not be any spring buffer action, would there?

A. If that occurred, it would prevent—that is, if that play was not

sufficient there to allow buffer action, of course, it would prevent it, yes, sir.

QX. 60. Well, it is not sufficient, is it?

A. I should not consider the illustration sufficient, so that——

QX. 61. That is true, also of Fig. 2, isn't it?

A. In practice, a space would be readily left there, for buffer action, if they desired to have the buffer action.

QX. 62. I am asking you of the device as shown.

A. The device as shown, yes, sir.

QX. 63. And what you have said about there not being any spring buffer action in 1 and 5 is also true of Fig. 2, is it not?

A. So far as you can judge from Fig. 2, that being a side elevation.

QX. 64. And you can tell, can you not?

A. In comparison with Fig. 1?

QX. 65. Yes, no trouble. Now, in this Frost Patent, what holds the spring in place?

A. In this Frost Patent no device is shown for holding the spring in place.

QX. 66. So it will not stay in place, will it?

A. It would be made to stay in place by the simple mechanical expedient of placing a plate underneath it.

200 QX. 67. There s nothing shown of that, is there?

A. Nothing shown in the drawing.

QX. 68. So the spring would fall right out, if you made a spring like that?

A. Without any plate being provided.

QX. 69. If you made a spring like that shown in the drawing, the spring would fall right out, wouldn't it?

A. It would, so far as the illustration shows.

QX. 70. Now, in this same patent, can the spring and the followers be removed as a unit?

A. No, sir.

By the Court: Ask that again.

QX. 71. Can the -pring and the followers be removed as a unit? Can the followers be removed by direct downward movement, from the positions in which they stand?

A. No. As shown by me yesterday they must be turned to the side and taken down through——

QX. 72. The followers extend beyond the arms of the yoke, do they not?

A. The followers have projections at the upper ends, which extend beyond the sides of the yoke when they are in their transverse position.

QX. 73. Now turn to the Frost patent, 510,854. Is anything shown in this patent——

By the Court: That is the patent of 1893?

By Mr. Neave: Yes, your Honor.

QX. 74. Is anything shown in this patent, other than the bosses of Figures 5 and 6, for holding the springs in place?

A. There is not.

QX. 75. You said that the parts 25 in this patent were described as slides; and you said that they appeared in the claims, particularly in Claim 3. It is perfectly apparent, is it not, that you are wrong in that? Claim 3 says: "A spring controls slide connected with the dog whereby it is raised and lowered," so that the slide of these claims is the part marked 12, is it not, attached to the dog marked 14, I think—marked 13.

201 A. I was wrong in that respect. The slide is numbered 12 in the specification, and it is the slide attached to the dog that is referred to in the claim.

QX. 76. And the slides or followers, 25, are not referred to in the claims at all, are they, in any of them?

A. The slides 25, referred to on page 2 in line 37, are not the slides specified in the claims, this patent being, I observe now, from a more careful reading of the claims, drawn to the structure in the coupling head, rather than to the buffing structure at the rear end of the coupling device.

QX. 77. Now, please turn to the Reagan patent, 491,785, Figs. 1 and 2 of these drawings are plan views, are they not? That is, views looking down from on top?

A. They are, partially sectionized.

QX. 78. You have said that the yoke of this Reagan patent was connected to the sides of the draw-bar. It is a vertical yoke, is it not?

A. It is a vertical yoke.

QX. 79. Connected to the top and bottom?

A. Connected to the upper and lower sides of the draw-bar.

QX. 80. A vertical yoke?

A. A vertical yoke connected with the upper and lower sides.

QX. 81. And you have said that the plate C retains the springs in place. Are you not wrong in that?

A. Perhaps my choice of the term "retain" was not quite right. It would prevent the springs from falling out, from below.

QX. 82. Well, now let us see how that is. Suppose you take the plate C off; would the springs fall out below? Will they not be held up by the yoke or the lower arm of the vertical yoke?

A. They would fall to the lower side of the yoke, but on the removal of the yoke, of course, the spring would readily fall from the pocket, the plate C having been removed.

Q.X. 83. Then, when the parts are assembled, the plate C
202 has absolutely nothing to do with holding the spring in place, has it?

A. It does not hold the spring in place.

Q.X. 84. No. Now turn to the Simons Patent 627,540. You had a model of the Simons structure there. A part of that model was composed of short sections of the two center sills, was it not?

A. It was—it is.

Q.X. 85. So if you turn that model through a 90 degree angle, rotate it 90 degrees, you are rotating the center sills, too, aren't you?

A. In the model.

Q.X. 86. Suppose you take the car structure shown in the Simons patent and rotate it 90 degrees, you are rotating——

A. Obviously.

Q.X. 87. —the center sills, aren't you?

A. Obviously, but I made no statement——

Q.X. 88. You are turning the car over on its side, aren't you?

A. I made no statement of rotating the center sills of a car. I was simply referring to the rotating of the model.

Q.X. 89. And when you rotated the model, you rotated the center sills?

A. The center sills were rotated, on the model.

Q.X. 90. So that it would be absolutely an impractical thing to do, in a car structure, wouldn't it? It would destroy the function of the center sill?

A. I did not for a moment mean to mislead the court, or anybody else, into the belief that I would rotate the center sills of a car. I was illustrating the likeness between one model and the other model, by simply the rotation of the models.

Q.X. 97. Then when you take this model of the Simons device, and rotate it through 90 degrees, you cease to represent the structure shown in the patent, do you not?

203 A. Simons, of course, never intended his structure for that location. He specifically takes his patent on the location shown therein, which is that for the horizontal removal of the springs and followers.

Q.X. 92. And when you rotate the model through 90 degrees, you are rotating the coupler through 90 degrees, too, aren't you?

A. Surely.

Q.X. 93. So that it could not connect to an adjoining car, could it?

A. I did not rotate a coupler on a car. I was simply rotating the model to show the relationship——

Q.X. 94. And in rotating the model you were doing what you absolutely could not do in practice, weren't you?

A. Surely. That is absurd, to suppose that you could rotate a car, a platform, that is attached——

Q.X. 95. And it is rather absurd to suppose that you accomplish anything that is really enlightening anything by rotating the model, when you cannot rotate the part of the thing of which it is a model?

A. It simply illustrates that which happens, every day, of changing parts, in re-designing the same structure.

By the Court: I think we will suspend now.

By Mr. Neave: That is the end of the cross-examination, your Honor. Does that finish the witness?

By Mr. Samuels: We might have a little re-direct, after recess. I have something in mind.

By Mr. Phillips: It will be very short.

By Mr. Neave: May I ask if they have other witnesses?

By Mr. Samuels: We may call one practical witness, and possibly two, but the examination will be short.

(Recess until 2:30 o'clock P. M.)

Friday, January 6, 1915, 2:30 P. M. Court met pursuant
204 to adjournment. Present: Same as before.

By Mr. Phillips: No re-direct, may it please your Honor.
By the Court: What is that?
By Mr. Phillips: No re-direct examination.
By the Court: Call your next witness.
By Mr. Samuels: We desire to produce on behalf of the defendant Mr. Weston, a practical expert in the draft gear art.

ARTHUR H. WESTON, called as a witness on behalf of the defendant, having been first duly sworn, testified as follows:

Direct Examination by Mr. Samuels:

Q. 1. Mr. Weston, what experience have you had——
By the Court: What is the name?
By Mr. Samuels: Mr. A. H. Weston.
By the Court: What is the "A" for?
By Mr. Samuels: Arthur.
By the Court: Arthur H. Weston of——
By the Witness: Baltimore, Maryland.
By the Court: What kind of an expert?
By Mr. Samuels: He is a practical man.
By the Court: What?
By Mr. Samuels: He is a practical expert.
By the Court: What do you mean, mechanical?
By Mr. Samuels. He is a man who is acquainted with the draft gear art from the practical side.
By the Court: Go on.
Q. 2. Mr. Weston, state your experience in the railway art?
A. In 1890 I entered the Mount Clare shops of the B. & O. as a machinists' apprentice, and was in the employ of the B. & O. for some seven years. During two and a half years of that time I was
205 in the drawing room engaged in making drawings of car and locomotive parts. During two and a half years of this period of employment I was employed as inspector of material, and my duties were to inspect locomotive and car castings.

In 1897 I was employed by the superintendent of motive power of the Western Maryland Railroad as draftsman, and, acting in that capacity, made drawings of freight cars and freight car parts.

In 1899 I was appointed chief draftsman for the Atlantic Coast Line Railroad Company, and was located at Wilmington, North Carolina; during my three years' period of service with the Atlantic Coast Line as chief draftsman, I had the supervision of design of freight cars and passenger cars, and standardization of the parts of these cars.

In 1902 I entered the service of Mr. Cornelius Vanderbilt, in New York, as a designing draftsman of steel cars, and, while in his service designed complete steel cars and assisted in the design of various types of steel freight cars.

In 1903 I entered the service of the T. H. Symington Company

as mechanical engineer, and remained in that capacity until February, 1914, when I was transferred to the sales department as sales engineer. During the term of my occupancy of that postion of mechanical engineer with the Symington Company I was responsible for the design of their various specialties, including draft gear; and, for several years, also acted as head of their draft gear inspection department, in which capacity I directed the inspection of draft gear castings and the proper application of same to freight cars. I frequently made personal inspection of draft gear castings at various foundries, and the application of same to freight cars at the several power plants throughout the United States and Canada.

Q. 3. Here is a model, acknowledged by the defendant, I believe, to represent the Byers' structure. Do you understand that illustrative model?

By the Court: The Record does not show what it is.

206 By Mr. Phillips: What exhibit is it?

By Mr. Samuels: Model Defendant's Exhibit G.

By the Witness: As I understand——

By Mr. Phillips: I am not asking you to describe it.

By the Witness: What is the question?

By Mr. Samuels: Just do you understand it?

A. I do.

Q. 4. Can you conceive a full sized structure of a draft gear made on those lines?

A. My conception of a full sized structure, as shown by the model referred to, would be a pocket casting to suit modern freight car construction, and, as such, the width over the outside bases of the side sills would necessarily be 12⅞ inches. The distance between the top wall and the bottom closing plate would have to be sufficient to accomodate two-eights inch diameter draft springs placed one above the other.

Its length between the end sills or abutments would have to be sufficient to accomodate a spring 7⅞ inches long, together with two followers 1½ to 2 inches in thickness.

Further, each side wall would have to be of such a length and width as to provide space for riveting each side wall to the center sills of a steel car by not less than 9⅞ inch rivets. The end walls of the pocket casting would have to be reinforced by ribbing, to stand—to withstand the maximum buffing and pulling shock to which this casting would be subjected in service under modern operating conditions.

Q. 5. Would the structure which you understand to be represented by that model, and made of sufficient size to go on a modern freight car, and would that be a practical structure?

A. I would not consider it so.

Q. 6. You have stated that you are a salesman. Would
207 you consider that you could sell such a device to the railroads?

A. I would not, in view of the fact that the pocket casting of this device, made to dimensions as heretofore described, would be a very heavy, cumbersome structure ,and its cost, therefore, would

be very excessive, as compared to the cost of separate cheek plates or draft lugs, which are universally offered of various designs by all makers of draft gear, offered—which might be offered in competition.

Q. 7. You speak of devices offered in competition.

Have you ever seen such a device as this offered, or has one ever been offered in competition against you in bid ling?

A. There has not.

Q. 8. What are the determining factors in the sale of such equipment, and in the selection of it by the railroads?

A. I should say there were three primary factors; first, satisfactory performance as an operative mechanism; second, durability under all service conditions; third, relative cost of manufacture to other draft gear devices of alleged or proven equal merit.

Q. 9. And you find, do you not, that this device, if made strong enough to be durable and operative, would be too expensive to handle—too expensive to sell.

A. I do, in competition with——

Q. 10. How about its weight, in connection with the difficulty of applying it to a car?

A. The usual practice in car plants of applying separate cheek plates is to apply each separate cheek plate to each center sills—to each center sill—before the two center sills—before the two sills are assembled in the car under frame.

Under these conditions it is the ractice to take the center sill and the cheek plate to heavy, quickly operating riveting machines and very rapidly rivet the cheek plate casting to each sill, the
208 center sills being assembled in the car underframe after this work is done.

With an integral pocket casting as heavy as it would be necessary to make it to suit a steel freight car, it would be necessary to jack up the casting into position between a pair of center sills, after the same had been assembled as part of the car underframe; and after temporarily securing the pocket casting to the pair of center sills by a few bolts, it would be necessary to drive all of the rivets with the pocket casting in its position on the complete or practically assembled underframe.

Q. 11. Can you give any idea of the relative cost—in time, of course of applying these castings?

A. I should say that it would probably cost 25 per cent. more to apply the integral pocket casting than separate cheek plates.

Q. 12. Why could you not fasten the pocket castings to one sill and then set it up and rivet it to the other sill?

A. Because with this method of attachment the second center sill would have to be assembled on the car underframe after one side of the pocket casting had been riveted to the first center sill. This would make it very hard to bring the second center sill into proper longitudinal alignment with the first center sill and have the rivet holes in the center sill match with the holes in the side sills of the pocket casting.

Q. 13. Then it is a fact, is it not, that these holes in the sills are made before the frame is set up?

A. They are invariably.

Q. 14. And you say it would be very difficult to bring the holes in the casting into registration with the holes in the sill, practically?

A. Under conditions as described.

Q. 15. By that you mean with an integral casting?

A. Yes.

Q. 16. Are you acquainted with the American Continuouf draft gear?

A. I have seen the American Continuous draft gear on cars.

209 Q. 17. Can you tell anything about the difficulty of reassembling draft gear and putting the rods back into position after they have been taken down?

A. The principal difficulty would be in reconnecting the American Continuous rods to the coupler key, or drawbar key, after the same had been disconnected—owing to the length of the American Continuous rods and the—and their small diameter relative to length, the rods sag considerably at the center when not held in place by connection at both ends to the key through the draw head or draw-bar.

Therefore, in order to connect again to the draw-bar key, it would be necessary to pull the draft rods out straight, or, in other words, to pull out the sags at the center.

By Mr. Samuels: Direct examination of the witness closed.

Cross-examination by Mr. Neave:

Q. X 18. Mr. Weston, I do not know that I fully understand what you have been saying as to just how these cheek plates are assembled with the steel center sills. Am I right in understanding that the cheek plate is riveted on one center sill, the cheek plate riveted on another center sill, and then those two set up together, as shown in the Plaintiff's Exhibit No. 5, before the parts are assembled on the car frame at all?

A. From my knowledge of general practice, the separate cheek plates are invariably riveted to each center sill, before those center sills are assembled as part of the car underframe.

Q. X 19. But those two center sills are ordinarily fastened together in the manner shown in Plaintiff's Exhibit No. 5, before they get to the car, are they not?

A. Well, the model is so very far from representing car construction, in its full length, that I am unable to answer your question intelligibly.

210 Q. X 20. Is one center sill put on the car before the other center sill is put on, or are the two brought to the car as a unit, connected together, and put on the car?

A. Well, those—there are different methods in different car frames.

Q. X 21. Where have you observed the method of assembling the cheek plates and the center sills?

A. At what particular plant?

Q. X 22. Yes.

A. Pressed Steel Car Company, Standard Steel Car Company.

Q. X 23. When did you observe this done at the Pressed Steel Car Company?

A. Well, I have observed it so often that I cannot recollect any particular date.

Q. X 24. What cheek plates were being attached to that car?

A. Cheek plates of the Farlow three-key draft gear.

Q. X 25. Have you ever seen any cheek plates like those on Plaintiff's Exhibit No. 5, while they were being riveted to the center sills and assembled?

A. I have not.

Q. X 26. Just behind you is an exhibit, or a model rather, which I will refer to as the Plaintiff's Exhibit 9, for identification; and on the right hand end of it, you will see a draft gear mounted. Is that the form of draft gear that was shown by the model that you referred to in your direct testimony—the model of Byers' draft gear?

A. I cannot say that the—that this model referred to, of full size, represents the small aluminum model of the Plaintiff's Exhibit G—rather of the Defendant's Exhibit G.

Q. X 27. What difference do you see?

A. Not knowing the scale to which this model was worked out it is impossible to compare dimensions.

Q.X. 28. It is mere question of dimensions, then, if there is any difference?

A. The question of dimensions would be the principal difference, and further, defendant's model marked Exhibit G, is not
211 shown assembled with representations of draft timbers—of draft sills.

Q. X 29. Would, in your opinion, this full sized draft rigging, on Plaintiff's Exhibit for Identification 9, be a practical draft rigging, usable?

A. Not under present conditions of car construction, especially relating to steel cars.

Q. X 30. Why not?

A. Because the spacing of sills—because the spacing of draft sills shown on this model is for wood cars, and is only ten inches; whereas, the spacing of center sills on steel cars is 12⅞ inches. The springs shown here are 6¼ inches by 8, probably, as compared to 8 by 8-inch springs used in steel freight cars today.

Q. X 31. Is it your opinion that this full sized device is practical with the wood sills?

A. I don't think the method of attachment would stand up very long under modern operating conditions, held by means of only four bolts.

Q. X 32. Four bolts on each side?

A. Yes.

Q. X 33. Don't you know of any use at the present time of draft gears having single integral castings or pockets enclosing the draft gear?

A. Not on freight cars.

Q. X 34. Well, what on, if you know of their use at all?

A. Only on locomotive tenders.

Q. X 35. And the draft gear of the locomotive tender is used for the same purpose as the draft gear of a freight car, is it not?

A. It is. But the purpose of the—the only purpose of a housing casting on a freight tender—of a housing or pocket casting on a freight tender, or a locomotive tender, is to more securely tie the center channels together, near the end sill, because the spacing of center sills on locomotive tenders is usually twenty to twenty-two inches, as compared to 12⅞ inches, the standard
212 spacing of center sills on freight cars.

Q. X 36. And the spacing between the center sills on the tender is much greater than it is on a freight car?

A. It is, as a rule. There are some tenders——

Q. X 37. And they use a single housing or pocket casting there, do they in many instances?

A. They do in some cases.

Q. X 38. And that is still being done?

A. To my knowledge.

Q. X 39. Is that done on the B. & O. Road?

A. I could not speak from my personal knowledge.

Q. X 40. Do you know whether it ever was done on the B. & O. Road?

A. I could not say from my personal knowledge.

Q. X 41. Now, referring for a moment to the American Continuous draft gear; suppose you take out the pin connecting the side rods, side bars, and that runs through the draw-bar, will the side bars fall down when you take that pin out?

A. The American Continuous rods are mostly on freight cars of old construction, and they are supported to the car body by various methods. In some instances they are passed through a hole in the body bolster, if the same is made from metal, and attached by means of a U-shaped clip to a wood body bolster.

Q. X 42. So the rods would not fall down when you take the key out?

By the Court: If you can answer the questions yes or no, do so, and then explain afterwards.

A. They would not fall down on the ground.

Q. By Mr. Neave: How far down would they fall?

A. I don't know—I don't know that the term "falling down" properly describes it, I referred to a sag, considerable sag in the center.

Q. X 43. And what would happen to the ends?

A. The ends would draw in towards the body bolsters, or away from the key, through the——

213 Q. X 44. But when you take out the key you would not have to support the side rods in any way, would you?

A. No, I think not.

By Mr. Neave: That is all, Mr. Weston.
By the Court: Any redirect?
By Mr. Samuels: No redirect.
By the Court: Call the next witness.
By Mr. Phillips: I understand that closes our case.
By Mr. Samuels: Yes, we close our case.
By the Court: Defendant rests?
By Mr. Samuels: Defendant rests.
By Mr. Phillips: If there are any Exhibits we can put them in afterwards.
By the Court: Oh, you can put in Exhibits at any time.

Defendant's Exhibits.

(Here follows diagram marked page 214.)

Defendant's Exhibit A.

(For identification.)

U. S. DISTRICT COURT,

DISTRICT OF MAINE.

THE NATIONAL MALLEABLE CASTINGS CO.
and JACOB J. BYERS

vs.

In Equity No. 705.

THE T. H. SYMINGTON COMPANY.

MARTHA A. SHELTON,
Notary Public.

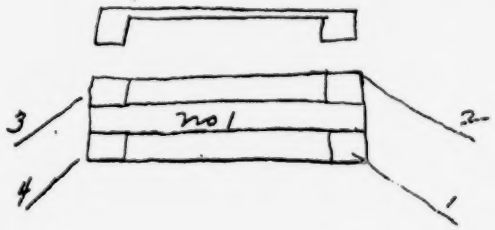

X

215 DEFENDANT'S EXHIBIT R.

File Wrapper and Contents Emerick Patent.

2–390.

UNITED STATES OF AMERICA,
DEPARTMENT OF THE INTERIOR,
UNITED STATES PATENT OFFICE.

To all to whom these presents shall come, Greetings:

This is to certify that the annexed is a true copy from the Records of this Office of the File Wrapper, Contents and Drawings in the matter of the Letters Patent of William H. Emerick, Number 693,643, Granted February 18, 1902, for Improvement on Draft-Rigging for Cars.

In testimony whereof I have hereupon set my hand and caused the seal of the Patent Office to be affixed at the City of Washington, this 23rd day of December, in the year of our Lord one thousand nine hundred and fourteen and of the Independence of the United States of America the one hundred and thirty-ninth.

[SEAL.] J. T. NEWTON,
Acting Commissioner of Patents.

Ten cent Documentary Stamp cancelled.

216 Div. 34.

2–437.

Div. 34.

Number (Series of 1900) 61,678.

1901.

(Ex'r's Book) 249/4779.

Patent No. 693,643.
Name, William H. Emerick.
Assignee
Of Chicago
County of
State of Illinois.
Invention, Draft Rigging for Cars.

Division of App., No. —, filed ——— —, 190
Parts of application filed.

	Original.	Renewed.
Petition	May 24, 1901	, 190
Affidavit	" " 1901	, 190
Specification	" " 1901	, 190
Drawing 2 shts	" " 1901	, 190
Print		
Model None	190	, 190
Specimen	190	
First Fee Cash $15		
	May 24, 1901	, 190
" " Cert.	190	, 190
Appl. filed complete		
	May 24, 1901	, 199

Examined: G. R. Simpson.
Jan. 13, 1902 , 190
Countersigned: J. W. Babson. 190
For Commissioner. For Commissioner.
Notice of Allowance
January 15, 1902 , 190
Final Fee Cash $20 Jan. 30, 1902 , 190
" " Cert. 190 , 190
Patented February 18, 1902
Associate Attorney, Attorney, Brown & Darby,
1123 Monadnock Build'g.
Address, Address, Chicago, Ill.
Date of Patent.
Patent No. 61,678.
Amount received, 45.00, 2 c'ks. Chief Clerk.

217 Law Offices of Brown and Darby, 1123-1124-1125 Monadnock Block, 260 Dearborn St., Chicago.

May 22, 1901.

Hon. Commissioner of Patents, Washington, D. C.

SIR: Enclosed please find our check to your order for $15.00, and another check for $30.00, which please apply in payment of the filing Government fees in the following applications:

William H. Emerick, Draft Rigging for Cars.
George A. Lowry, Apparatus for making Grass Twine.
George A. Lowry, Nippers.

The papers and drawings in the above cases are forwarded by this mail under separate cover. Please acknowledge receipt, and oblige.

Very respectfully, BROWN & DARBY.

[Endorsed:] Mail Room, May 24, 1901, U. S. Patent Office.

218 *Petition.*

To the Commissioner of Patents:

The petition of William H. Emerick, a citizen of the United States, residing at Chicago in the County of Cook State of Illinois and whose Post Office address is 5517 Shields Ave. Chicago prays that Letters Patent may be granted to him for improvement in Draft Rigging for Cars as set forth in the annexed specification.

And he hereby appoints Frank T. Brown and Samuel E. Darby, composing the firm of Brown & Darby, 1123, 1124, 1125 Monadnock Block. 260 Dearborn Street, Chicago, State of Illinois, his attorneys, with full power of substitution and revocation, to prosecute this application, to make alterations and amendments therein, to receive the Patent and to transact all business in the Patent Office connected therewith.

Signed at Chicago in the County of Cook and State of Illinois this 22nd day of May 1901.

WILLIAM H. EMERICK.

W. H. E.

5/22/1.

U. S. Revenue Stamp, 25 Cents.

Specification.

To all whom it may concern:

Be it known, that I, William H. Emerick a citizen of the United States, residing at Chicago, in the County of Cook and State of Illinois, have invented a new and useful Draft-Rigging for Cars of which the following is a specification.

This invention relates to Draft Rigging for Cars.

The object of the invention is to provide a construction of draft rigging for cars which is simple and efficient and wherein renewal of the coupling bar or arm, in case of breakage, may be effected easily and readily.

219 Other objects of the invention will appear more fully hereinafter.

The invention consists substantially in the construction, combination, location and arrangement of parts, all as will be more fully hereinafter set forth, as shown in the accompanying drawings, and finally pointed out in the appended claims.

Referring to the accompanying drawings, and to the various views and reference signs appearing thereon,—

Fig. 1, is a top plan view of a draft rigging constructed in accordance with the principles of my invention, parts being broken out and in section.

Fig. 2, is a horizontal longitudinal section of the same on the line 2, 2, of Fig. 3, looking in the direction of the arrows.

Fig. 3, is a view in side elevation.

Fig. 4, is a view in vertical longitudinal section on the line, 4, 4, Fig. 1, looking in the direction of the arrows.

Fig. 5, is a transverse section on the line 5, 5, of Fig. 4, looking in the direction of the arrows.

Fig. 6, is a view similar to Fig. 1, showing a slightly modified arrangement of parts embraced within the sp-rit and scope of my invention.

Fig. 7, is a view in vertical longitudinal section on the line 7, 7, of Fig. 6.

In the practical operation of cars the coupler arm or bar by which one car is attached at its end to the next adjacent car, is subjected to heavy usage by reason of the pull exerted thereon when the cars are coupled up, and by reason of the impact thereon during the coupling operation. By reason of this heavy usage, breakage of the coupler arm or bar frequently occurs. In prior constructions of draft rigging for cars embodying means of attachment of the coupler arm to the car body it has been necessary, in making repairs or replacements of the coupler arm or bar, to remove the draft rigging from the supporting sills. This consumes time and involves the taking apart and replacement of the parts of the draft rigging, which is a practical objection the present invention is particularly designed to overcome, and in accordance with the principles of my invention I provide a construction of draft rigging which is exceedingly simple and efficient and wherein the coupling arm or bar may be readily removed and replaced, in case of breakage, without the necessity of removing, taking apart or replacing the draft rigging.

In the drawings I have shown various constructions and arrangements of draft rigging embodying the principles of my invention. Referring to Fig. 1, reference signs 8 and 9 designate the side sills constituting the framework upon which the draft rigging is supported, and to which the rigging is connected, said sills being bolted or otherwise connected to the car body in the ordinary manner. Reference signs 10, and 11, designate counterpart castings respectively mounted upon the rigging sills 8, 9. Said castings are provided with flanges 12, arranged to receive sills 8, 9, therebetween to afford efficient means for clamping or bolding said castings to said sills, said castings being mounted upon the opposed inner faces or sides of the sills 8, 9, respectively. On the inner opposed faces of castings 10, 11, are formed co-operating guideways 13, 14, each adapted to receive a leg 15, 16, of a U-shaped belt or strap, which constitutes the drift strap. The outer ends of the legs 15, 16, are slotted to receive therethrough a key or pin 17. The sills 8, and 9, are also correspondingly slotted in alignment with each other and with the free ends of the legs 15, 16, the ends of the key or pin 17, extending into the slots 18, 19, in said sills, as clearly shown in Fig. 2. Reference sign 20, designates the coupler arm or bar, which may be of the usual or ordinary construction, and having a transverse slot or opening therethrough, as shown in Figs. 2 and 4, to receive therethrough the pin or key 17.

In this manner the coupler arm may be detachably connected to the ends or legs 15, 16, of the draft yoke or strap. The slots 18, 19, in the sills 8, 9, should be of sufficient size or area to afford clearance for
lateral movements of the key 17, under the exigencies of the
221 impact or draft imposed thereon in coupling or hauling a car.

Interposed between the end of coupler arm 20, and the connecting web portion 21, of the draft yoke, is a suitable arranged spring, which may be of the ordinary construction and arrangement such as is usually employed in draft riggings, for the purpose of relieving the shock and jar of the pulls or impact imposed upon the coupler arm or bar in use. I have shown in Figs. 1, 2, 3 and 4, a simple arrangement of spring or spring-buffer comprising end plates 22, 23, suitably connected together by rods 24, 25, upon which said plates loosely slide. Upon each rod is mounted the coiled springs 26, 27. All the parts of the spring-buffer mentioned constitute a connected frame arranged to be received between the castings 10, 11, and held in place by the flanges 28, which flanges, if desired, may be made removable to afford access to said springs when desired. The plate 22, of the spring-buffer is arranged to take bearing against the web or connecting portion 21, of the draft yoke, and the plate 23, of the buffer is arranged to take bearing against the inner end of the coupler arm or bar, as most clearly shown in Figs. 2 and 4.

From the foregoing description it will be seen that when a pull is exerted upon the coupler arm the buffer plate 23, will take bearing against the shoulders 30, of the castings 10, 11, which thereby constitute a stop for said buffer plate, and the pull exerted upon the coupler arm 20, is transmitted through the draft yoke and is imposed upon the buffer plate 22, which being movable and loosely mounted upon the bolts 24, is drawn yieldingly towards the plate 23, thereby imposing a compressing upon the springs 26, 27. Similarly, in case of an endwise impact upon the coupler arm, as when two cars come together, for instance, the buffer plate 22, strikes against the shoulder 31, (see Fig. 1) of the castings 10, 11, and the endwise projection of coupler arm 20, forces the buffer plate 23, towards plate 22, and imposes a compressive tension upon the springs. In this manner the parts are relieved of shock or jar. If desired, the ends of the key
or pin 17, may be retained in place and said pin or key pre-
222 vented from working out of place by means of keepers 32, 33.

From the foregoing description it will be seen that in case of breakage of the coupler arm or bar the same may be removed and replaced without disturbing the other parts of the draft rigging, by merely removing the keeper or the keepers 32, 33, and withdrawing the locking key or pin 17, and when the new coupler arm or bar is inserted the same may be quickly locked or secured to the draft rigging by again inserting the locking pin or key 17, in place through the openings, 18, 19, in the sills 8, 9, and the openings in the ends of the legs 15, 16, of the draft yoke, and through a transverse opening in the coupling arm.

The construction shown in Figs. 6, and 7, differs from that above described with reference to Figs. 1, 2, 3, 4 and 5, only in the arrangement of the buffer springs. For instance, the construction and ar-

rangement shown in Figs. 1 to 5, and above described, is known in the art as a twin arrangement, and the construction shown in Figs. 6 and 7 is known in the art as the tandem arrangement of springs. That is, in the one case the set of springs are arranged side by side, whereas in the construction shown in Figs. 6 and 7 said springs 40, 41, and 42, 43, are arranged one behind and in line with upon the other, each set of springs being held between relatively movable buffer plates 44, 45, 46, 47. In the construction shown in Figs. 6 and 7, however, two locking pins or keys 48, 49, are employed, the pin 49 passing transversely through the sills 50, 51, and the ends 52, 53, of the coupling yoke, and also through the coupler arm 20, and the other passing transversely through slots or openings in the sills 50, 51, and between the two sets of buffer springs, said key 48, forming a stop or shoulder for buffer plate 46, and the rear connecting web of the yoke strap forming a bearing for the corresponding plate 44, of the other set of springs, to effect a compression of the springs under the influence of a pull exerted upon the coupler arm, and said
223 key 48, forming an abutment for plate 45, of the one set of springs, while the end of the coupling arm 20, forms an abutment for the corresponding plate 47, of the other set of buffer springs to effect the compression of said springs under the influence of an impact imposed longitudinally upon the coupler arm. In other respects the construction in the two cases may be the same.

It is obvious that my invention is not to be limited or restricted to any particular construction or arrangement of buffer springs, and other forms of buffer springs may be employed in connection with my invention without departure from the spirit or scope thereof. It is also obvious that changes and variations in the details of construction and arrangement of parts would suggest themselves to persons skilled in the art and still fall within the spirit and scope of my invention. I do not desire, therefore, to be limited or restricted to the exact details shown and described. But having now set forth the object and nature of my invention, and constructions embodying the principles thereof, what I claim as new and useful and desire to secure by Letters Patent is:

Substitute A, July 15, '01.

---

1. In a draft rigging, the combination of supporting sills, of castings mounted thereon, a draft yoke movably supported in said castings, a coupling arm, and a removable locking key arranged to pass transversely through openings in said coupler arm, draft yoke and sills, as and for the purpose set forth.

2. In a draft rigging for cars, the combination of supporting sills having transverse registering openings therethrough, a coupling arm having a transverse opening therethrough arranged to be brought into registering relation with the openings through the supporting sills, a draft yoke having opening therethrough, also adapted to be brought into registering relation with the openings in said supporting sill, a key arranged to be removably received in said registering openings,

and a buffer spring interposed between said yoke and coupler arm, as and for the purposes set forth.

224 3. A draft rigging for cars comprising the side sills, counterpart castings mounted upon the opposed sides or faces of said sills, said castings provided with shoulders, follower plates arranged to be received between said castings and the shoulders thereon, springs interposed between said plates, a draft yoke arranged to straddle said plates, a coupler arm, and a removable key for connecting said coupler arm to said draft yoke and sills, as and for the purpose set forth.

4. A draft rigging for cars comprising side sills, castings mounted on the opposed faces of said sills, follower plates arranged to be received between said castings and movably mounted with respect to each other, springs interposed between said follower plates, a draft yoke arranged to straddle said plates, a coupler arm, said coupler arm, draft yoke and sills being provided with registering openings, and a locking key removably mounted to be received in said openings, as and for the purpose set forth.

5. A draft rigging comprising side sills provided with elongated slots or openings therethrough, a coupler arm having an opening therethrough, a draft yoke, a locking key or pin passing through said coupling arm and draft yoke and having its end received in the elongated slots in said sills, and yielding means interposed between said draft yoke and casting, as and for the purpose set forth.

6. A draft rigging for cars comprising side sills and a draft yoke, a coupling arm, a removable key for locking said arm and yoke to said sills, and a spring buffer interposed between said yoke and coupler arm, and shoulders for limiting said buffer, as and for the purpose set forth.

7. A draft rigging for cars comprising side sills, castings mounted thereon and provided with shoulders, a draft yoke, a coupling arm, a removable key for locking said arm to said yoke and sills, and a spring buffer mounted in said castings and arranged to be engaged by said yoke when moved in one direction and by said coupling arm when moved in the other direction.

[Matter enclosed between rules erased in copy.]

225 In witness whereof, I have hereunto set my hand this 22nd day of May, 1901, in the presence of the subscribing witnesses.

WILLIAM H. EMERICK.

Witnesses:
C. S. DARRACH.
S. E. DARBY.

Oath.

COUNTY OF COOK, *State of Illinois, ss:*

William H. Emerick the above named petitioner citizen of the United States and resident of Chicago in the County of Cook and

State of Illinois being duly sworn (affirmed) deposes and says that he verily believes himself to be the original, first and sole inventor of the improvement in Draft Rigging for Cars described and claimed in the foregoing specification; that the same has not been patented or described in any printed publication in any country before his invention or discovery thereof, or more than two years prior to this application; that no application for patent on said improvement has been filed by him or his representatives or assigns in any foreign country, that the same has not to his knowledge or belief been in public use or on sale in the United States for more than two years prior to this application, and he does not know and does not believe that the same was ever before known or used prior to his invention thereof; and that the same has not been abandoned by the petitioner.

WILLIAM H. EMERICK.

Sworn to and subscribed before me, this 22nd day of May A. D. 1901.

[SEAL.] SAMUEL E. DARBY,
Notary Public.

[Endorsed:] Serial No. 61,678, Paper No. ½. Application. Filed May 4-1901. William H. Emerick. Mail Room, May 24, 1901, U. S. Patent Office.

226 2–260.

Div. —, Room 281.

Address only "The Commissioner of Patents, Washington, D. C.," and not any official by name.

Paper No. 1.

All communications respecting this application should give the serial number, date of filing, title of invention, and name of the applicant.

W. F. F. DEPARTMENT OF THE INTERIOR, E. P. H.
UNITED STATES PATENT OFFICE,
WASHINGTON, D. C., June 29, 1901.
Mailed " " "

William H. Emerick, care Brown & Darby, 1123 Monadnock Bldg., Chicago, Ill.:

Please find below a communication from the Examiner in charge of your application for Draft Rigging for Cars, filed May 24, 1901. Serial No. 61,678.

F. I. ALLEN,
Commissioner of Patents.

This case has been examined.

The claims are all rejected as being for an inoperative device. In figure 2 applicant shows slots in the yoke of equal length with the slots in the draft timbers; therefore the key 17 would never come in contact with the metal of the yoke and no action would result. The claims are also rejected on each of patents No. 617,146, 227 Mitchell, Mar. 27, 1894 (Draw-bars,) No. 587,523, Galbraith, Aug. 3, 1897 (same class,) and No. 532,115, Timms, Jan. 8, 1895 (Drawbars, Continuous.)

G. R. SIMPSON,
Examiner, Div. 34.

W. F. F.

[Endorsed:] Serial No. 61,678. Paper No. 1. Rejection. Dated June 29, 1901. Wm. H. Emerick.

In the United States Patent Office.

Hon. Commissioner of Patents, Washington, D. C.

SIR: In the matter of the application of William H. Emerick for Draft Rigging for Cars, Serial No. 61,678, filed May 24, 1901, Room 281, and in response to the Examiner's letter dated June 29, 1901, please amend as follows:

√Cancel all the claims and substitute therefor the following:

Substitute C, Oct. 17, 1901.

A. 1. In a draft rigging, the combination of supporting sills having elongated openings, of castings mounted upon said sills, a draft yoke also provided with longitudinally extending through the arms thereof
Aug. 15, '01. elongated slots or openings, ∧ said yoke being
Insert B,) movably supported within said castings, a
Aug. 15, '01.) coupling arm ∧ and a removable locking key
the
arranged to pass transversely through ∧ [an]* opening in said coupling arm and through
Insert B¹,) the elongated slots or openings in said draft
Aug. 15, '01.) yoke and ∧ sills, as and for the purpose set forth.

[Matter enclosed between rules erased in copy.]
[* Words and figures enclosed in brackets erased in copy.]

Erased Oct. 17, '01.

2. In a draft rigging for cars, the combination of supporting sills having transverse registering elongated slots or openings therethrough, a coupling arm having a transverse elongated
Aug. 15, '01. ^ opening therethrough, arranged to be brought into registering relation with the
228 slots or openings through the supporting sills, a draft yoke having elongated longitudinally extend-
Insert B²,) ing slots or openings ^ also adapted to be
Aug. 15, '01. (brought into registering relation with the openings in said supporting sills, said yoke being loosely mounted between said sills, a key arranged to be removably received in said registering slots or openings, and a buffer spring interposed between said yoke
Aug. 15, '01. and coupler arm, [the elongated slot in said yoke bring of less length than the elongated slots or openings in said sills],* as and for the purpose set forth.

[Matter enclosed between rules erased in copy.]

1 [2, 3].* A draft rigging for cars comprising side sills, independent counterpart castings mounted upon the opposed sides or faces of said sills, said castings provided with shoulders and having cooperating longitudinally extending seats or ways in the opposed faces thereof, follower plates arranged to be received between said castings and operating between said shoulders, the ends of said plates extending into and working in said seats or ways, springs interposed between said plates, a draft yoke loosely seated between said castings and arranged to straddle said plates, a coupler arm and a removable key for connecting said coupler arm to said draft yoke and sills, as and for the purpose set forth.

2 [3, 4].* A draft rigging for cars comprising side sills, independent counterpart castings mounted upon the opposed faces of said sills and having longitudinal ways or seats formed in the opposed faces thereof, follower plates arranged to be loosely received between said castings and having their ends extending and working in said ways or seats, springs interposed between said follower plates, a draft yoke loosely mounted between said castings and arranged to straddle said plates, a coupler arm, said coupler arm, draft yoke and sills being provided with registering slots or openings, and a locking key adapted to be removably received in said openings, as and for the purpose set forth.

3 [4, 5].* A draft rigging for cars comprising side sills

[* Words and figures enclosed in brackets erased in copy.]

having elongated longitudinally extending slots or
229 openings, counterpart castings mounted on the opposed faces of said sills, a coupler arm having an opening therethrough, a draft yoke loosely mounted between said castings and having the sides thereof received in longitudinal seats formed in the opposed faces of said counterpart castings, a locking key or pin passing through said coupling arm and draft yoke and having its ends received in the elongated slots in said sills, and yielding means interposed between said draft yoke and casting, as and for the purpose set forth.

4 [5, 6].* A draft rigging for cars comprising side sills, independent counterpart castings mounted thereon and provided with longitudinally extending seats or ways on the opposed faces thereof, said castings also provided with shoulders arranged to project into said seats or ways, a draft yoke having its sides received in the seats or ways in said castings, a coupling arm, a removable key for locking said arm to said yoke and sills, follower plates extending transversely between said castings and having their ends received in said seats or ways and adapted to be engaged by said yoke when moved in one direction and by said coupling arm when moved in the other direction, and a spring buffer mounted in said castings and between said plates, said shoulders limiting the movement of said plates, as and for the purpose set forth.

Remarks.

If the drawing shows in Fig. 2 the slots in the yoke of equal length with the slots in the draft timbers, the drawing is wrong and due correction thereof will be made when the case is otherwise ready for allowance.

We have carefully examined the patents cited by the Examiner, and we do not find in the patents to Galbraith and to Timms any anticipation of applicant's invention. The patent to Mitchell is the closest approximation to applicant's construction, and in view of this patent we have carefully redrawn all of the claims, omitting
230 original claim 6, in order to bring out more clearly, certainly and definitely peculiarities of applicant's construction and arrangement of parts which are not found in the Mitchell construction. It will be observed that in the Mitchell construction the bolts which secure the yoke to the draft bar or coupling arm are rigidly mounted in the ends of the yoke. This construction is objectionable in that it results in great inconvenience in case the rigging is taken apart for replacement or repair, necessitating the use of specially constructed wrenches in order to effect a removal of the bolts. This is inconvenient and difficult. On the other hand, in applicant's case wherein the key which locks the yoke to the draw bar or coupling arm passes loosely through an elongated slot in the sides of the yoke, and hence may be readily and easily removed in taking apart the rigging for

[* Words and figures enclosed in brackets erased in copy.]

repair, replacement or the like, without the necessity of using special tools for the purpose of removing bolts or the like. This is a decided advantage in apparatus of this nature, and in redrawing applicant's claims this feature is brought out clearly and definitely, and as the Mitchell construction does not suggest this feature, we ask an allowance of the claims covering it. Moreover, the Mitchell patent does not disclose independent counterpart castings each complete in itself and mounted upon the opposed faces of the draft timbers or sills and having seats on the opposed faces thereof extending longitudinally of the castings in which are supported the ends of the follower plates. Nor does Mitchell disclose the feature of the draft yoke having its sides operating in seats formed in the opposed faces of the castings. These are features which the claims as now redrawn clearly bring out, and since this construction is advantageous over the Mitchell construction in that it makes a more compact, simple and inexpensive arrangement capable of being economically manufactured and easily and readily assembled or taken apart, we believe applicant is entitled to his claims wherein this construction is covered.

Moreover, by applicant's construction and arrangement ap-
231 plication of the invention may be readily made to the draft rigging of ordinary constructions such as are now employed. This is not true of the Mitchell construction, as it involves special constructions which cannot be introduced in present constructions, but necessitates an entirely new arrangement of rigging, and also necessitates the construction of a special follower, which is undesirable and adds to the expense of the construction, and also embodies a decided disadvantage in making repairs especially on cars or roads which do not own or possess these special constructions of followers, and hence greatly increasing the cost of repairs.

An early allowance of the case as now presented is requested.

Very respectfully,

BROWN & DARBY,
Attorneys for Applicant.

Chicago, Ills., July 12, 1901.

D.—C.

[Endorsed:] Serial No. 61,678. Paper No. 2. Amendment A. Filed July—15, 1901. Wm. H. Emerick. Mail Room, Jul- 15, 1901, U. S. Patent Office. U. S. Patent Office, Jul- 16, 1901, Division XXXIV.

232 2–260.

Div. —, Room 281.

Address only "The Commissioner of Patents, Washington, D. C.," and not any official by name.

Paper No. —.

All communications respecting this application should give the serial number, date of filing, title of invention, and name of the applicant.

W. F. F. DEPARTMENT OF THE INTERIOR, E. P. H.
UNITED STATES PATENT OFFICE,
WASHINGTON, D. C., July 26, 1901.
Mailed " " "

William H. Emerick, care Brown & Darby, 1123 Monadnock Bldg., Chicago, Ill.:

Please find below a communication from the Examiner in charge of your application for Draft Rigging for Cars, filed May 24, 1901. Serial No. 61,678.

F. I. ALLEN,
Commissioner of Patents.

The claims as amended July 15, 1901, have been examined.

Claims 1 and 2 are rejected on the patent to Mitchell of record. The bolts through the shank and yoke are the equivalent of the removable bar in the present case.

233 The remaining claims are rejected on the same reference in view of Timms, also of record. There is no invention in replacing the particular form of connection for the drawbar with the car in the Mitchell patent, by that shown in Timms; namely, in replacing the castings and followers in the one patent by those in the other.

G. R. SIMPSON,
Examiner, Div. 34.

W. F. F.

[Endorsed:] Serial No. 61,678. Paper No. 3. Rejection. Dated July-26-1901. Wm. H. Emerick.

234 In the United States Patent Office.

Hon. Commissioner of Patents, Washington, D. C.

SIR: In the matter of the application of William H. Emerick for Draft Rigging for Cars, Serial No. 61,678, filed May 24, 1901, Room 281, and in response to the Examiner's letter dated July 26, 1901, please amend as follows:

√*Line 4, claim 1, after the word "openings," insert, —through the arms thereof.*
√*Line 5, same claim, after the word "arm," insert,—*

Erased Oct. 11, 1901.

B. having an elongated slot or opening corresponding to the slot in said yoke arms.

[Matter enclosed between rules erased in copy.]

√*Line 6, same claim, cancel* the article *"an"*, and *insert the.*
√*Line 8, same claim, before the word "sills", insert,—*

Erased Oct. 11, 1901.

B¹. and having its ends extending into the elongated openings in said.

[Matter enclosed between rules erased in copy.]

√*Line 4, claim 2, before the word* "opening," insert, —elongated.
√*Line 7, same claim, after the word* "openings," insert,

Erased Oct. 17, 1901.

B². —corresponding to the elongated slot in the coupling arm and.

[Matter enclosed between rules erased in copy.]

√*Lines 12, 13 and 14, same claim, cancel the words "the elongated slot in said yoke being of less length than the elongated slots or openings in said sills."*

235 *Remarks.*

We have amended claims 1 and 2 in order to express more correctly the construction which applicant is seeking to secure. As now expressed, we believe these claims correctly set forth the construction.

With reference to the patent to Mitchell, cited against these claims, we beg to call attention to the fact that applicant provides a construction of draft rigging which is capable of application directly to the standard makes of draw-bars without the use of additional pieces or parts of special construction, which add to the complexity of the device as well as to the cost. In the standard constructions of draw-bars, the draw-bars are provided with a somewhat elongated slot, and in applicant's construction the draft yoke is detachably secured to the

drawbar by means of a key, which in the form shown comprises a flat metal strip of the usual key construction, and which passes through and fills, substantially, the transverse elongated slot in the draw-bar, and also passes through the corresponding elongated slots in the arms of the yoke, and has its ends projecting into the slots or openings through the side sills. This produces an exceedingly simple and inexpensive connection of the parts, and one which may be readily taken apart by merely removing the key. Now, in the Mitchell construction the yoke is connected to the draw-bar by means of two bolts. This construction necessitates a draw-bar having two bolt-holes, and as the standard constructions of draw-bars are not provided with bolt holes the Mitchell construction would entail an additional expense and a special construction of draw-bar to accommodate the securing bolts, and hence is not applicable to the standard constructions of draw-bars. If the Mitchell construction were applied directly to the standard construction of draw-bars with the two bolts shown passing through the elongated slot or opening in the draw-bar, then the shocks transmitted to the draw-bar during the handling of the
236 cars would snap the bolts off in short order, thereby necessitating constant repair and replacement of the parts, and hence increasing the expense; and if a filler block were inserted in the elongated slot of the draw-bar in order to fill up the space therein except that occupied by the securing bolts, it would entail an additional part or casting, thereby adding to the complexity of the construction and to the cost thereof, and also increasing the difficulty of the ready renewal or removal of the securing bolts. All these objections applicant avoids in his exceedingly simple construction employing a single locking key instead of two bolts, and the objections noted are demonstrated by actual and practical experience to be exceedingly undesirable; and since applicant's claims 1 and 2 clearly set forth and define the difference in construction of applicant's device over the disclosure of the Mitchell patent, we submit that said claims as now amended should be allowed, and the allowance thereof is requested.

We ask a reconsideration of the Examiner's action rejecting the remaining claims on Mitchell in view of Timms. The position of the Examiner, that there is no invention in replacing the particular form of connection of the draw-bar with the car, in the Mitchell patent, by that shown in Timms,—namely, in replacing the castings and followers in the one patent by those in the other—is based apparently, upon the assumption that all applicant has done has been to substitute portions of the construction of Timms for other and corresponding parts in the Mitchell construction. This is not the case. Moreover, it would be impossible to replace the parts of Mitchell by parts taken from Timms without involving an entire reorganization and reconstruction which was never contemplated by either Timms or Mitchell, and which would produce a device which neither of these patents discloses. Take claim 3, for instance. This claim specifies as an element "counter-part castings mounted upon the opposed sides or faces of the sills." The Mitchell patent does not disclose this element. In the Timms patent are disclosed what the patentee calls "draft irons
237 B," which possibly the Examiner construes the equivalent of applicant's counter-part castings mounted upon the opposed

sides of faces of the sills. Now, according to the Examiner it is necessary to transfer these counter-part castings from the Timms to the Mitchell construction. It cannot be said that said castings or "draft iron" replace anything shown in the Mitchell construction, as Mitchell does not show counter-part castings at all. Therefore, we have here one element entirely lacking in Mitchell, and even in the Examiner's view it is necessary to take such element from some other patent and introduce it bodily into the Mitchell construction in order to meet this claim. This is not permissible under the practice of the Office, and is not in consonance with the spirit of liberality which should actuate the Office in dealing with practical inventions of the nature set forth in this application. Claim 3 further calls for the feature of the castings provided with shoulders and having co-operating longitudinally extending seats or ways in the opposed faces thereof, and specifies that the follower plates employed have their ends extending into and working in said seats or ways. This is a construction and arrangement of parts which is not shown nor contemplated by Mitchell, and while it may be true that the followers C, C', of Timms have their ends operating between shoulders formed on the inner faces of the draft irons B, and operating in enlarged chambers or openings in said draft irons, it is difficult to see how this construction can be substituted for or replace any similar construction or arrangement in Mitchell without entirely reconstructing the Mitchell device. Moreover, applicant's claim 3 calls for a draft yoke loosely seated between the castings. The patent to Timms has no draft yoke at all. Mitchell has no castings. The draft yoke in Mitchell is not seated loosely between the opposed faces of castings. The draft irons of Timms are not constructed, as shown, to receive a draft yoke, and even if the draft iron of Timms were introduced in the Mitchell construction it would be impossible, without material modification
238 and reconstruction, to employ the draft yoke of Mitchell; for, and as further called for in this claim, the draft yoke straddles the follower plates; and the construction of Timms is one which not only does not permit of the use of a draft yoke, but which would require in itself reconstruction and rearrangement adapting it to use a draft yoke.

What has been said above applies with equal force to each of claims 4, 5 and 6, wherein the same construction and arrangement of parts is recited, and we particularly call attention to the fact that in claims 5 and 6 it is specified that the yoke is loosely mounted between the castings and has its sides received in longitudinal seats formed in the opposed faces of the counterpart castings. Timms does not show a yoke at all, and he does not show castings having longitudinal seats for the reception of the arms or sides of a yoke, nor does he show any construction adapted for the use of a yoke between the sills. Therefore, the substitution of the Timms form of connection of the drawbar with the car for that shown in the Mitchell patent, not only would not produce applicant's construction, but would fail to produce any operative device, except with such material modification and rearrangement as would amount to a new construction, and this is just what applicant has done. He has produced a new construction, a

simple construction, one that is economical in manufacture and efficient in operation, wherein the number of parts required is reduced to a minimum without sacrificing anything of strength, and which is applicable to constructions of uniform standard makes of draw-bars and hence can be applied to cars in actual service, or to replace other forms of draft rigging employed with such standard makes of draw-bars. This is not true of either of the references, and as the claims fully and clearly set forth what applicant seeks to secure, we trust the Examiner will not compel applicant to take an appeal to secure what we believe he is fairly and justly entitled to.

239 An early and favorable action on the case is requested.

Very respectfully,

BROWN & DARBY,
Attorneys for Applicant.

Chicago, Ill., Aug. 13, 1901.

[Endorsed:] Serial No. 61,678. Paper No. 4. Amendment B. Filed Aug-15-1901. Wm. H. Emerick. U. S. Patent Office, Aug. 19, 1901, Division XXXIV. Mail Room, Aug. 15, 1901, U. S. Patent Office. U. S. Patent Office, Aug. 16, 1901, Division XIX.

240 2–260.

Div. —, Room 231.

Address only "The Commissioner of Patents, Washington, D. C.," and not any official by name.

Paper No. —.

All communications respecting this application should give the serial number, date of filing, title of invention, and name of the applicant.

W. F. F.

DEPARTMENT OF THE INTERIOR,
UNITED STATES PATENT OFFICE,
WASHINGTON, D. C., Sept. 5, 1901.
Mailed " " "

William H. Emerick, care Brown & Darby, Chicago, Ills.:

Please find below a communication from the Examiner in charge of your application 61,678, May 24, 1901, for Draft Rigging for Cars.

F. I. ALLEN,
Commissioner of Patents.

The claims as amended Aug. 15, have been examined and are all rejected on the Mitchell patent of record. This patent shows the draw bar having a horizontal yoke, said drawbar being supported by a pair of independent castings mounted on the draft beams, these cast-

ings have ways for guiding the yoke and also have lugs to form stops for the followers. The connection of the yoke with the drawbar is equivalent of that in the present case.

EDWARD O. FORNEY,
Act'g Examiner, Div. 34.

W. F. F.

[Endorsed:] Serial No. 61,678. Paper No. 5. Rejection. Dated Sep.-5-1901. Wm. H. Emerick.

241 In the United States Patent Office.

Hon. Commissioner of Patents, Washington, D. C.

SIR: In the matter of the application of William H. Emerick for Draft Rigging for Cars, Serial No. 61,678, filed May 24, 1901, Room 281, and in response to the Examiner's letter dated Sept. 5, 1901, please amend as follows:

√Cancel Claim 1, and substitute therefor the following:

Erased Dec. 9, '01.

C. 1. In a draft rigging, the combination of supporting sills having elongated openings, of independent castings respectively mounted upon said sills, a draft yoke also provided with longitudinally extending elongated slots or openings through the arms thereof, said yoke being movably supported between the opposing faces of said castings, a coupling arm having an elongated slot or opening corresponding to the slots in said yoke arms, and a removable locking key arranged to pass transversely through the opening in said coupling arm and through the slots or openings in the arms of said draft yoke and having its ends extending into the elongated opening in said sills, as and for the purpose set forth.

[Matter enclosed between rules erased in copy.]

√Cancel *claim 2.*

√Renumber *claims 3, 4, 5 and 6 as 2, 3, 4, and 5,* √respectively.

Remarks.

The rejection in this case has been boiled down to the single reference of the patent to Mitchell, but the Examiner's statement of the construction, location and arrangement of parts as disclosed in this patent shows that evidently the Examiner is relying on words or forms of expression rather than upon intrinsic differences of
242 constructions. While it is true that the Mitchell patent shows independent castings mounted on the draft beams, which cast-

ings have ways for guiding the yoke, said patent does not show independent castings, nor the relative location or arrangement thereof as disclosed by applicant and as specifically recited in the claims. For instance, in applicant's construction and as called for in his claims, the castings are in counterpart sections, one casting or section being mounted upon the face of one of the side sills and the other or counterpart section being mounted upon the opposed face of the other sill, and the seats or ways in which the arms of the draft yoke are mounted are upon the opposed faces of the castings; that is, the faces of the openings which are presented towards each other. In the references, however, each casting is a solid block, which is mounted between the sills. The yoke straddles the casting instead of sliding in ways formed on the opposed faces thereof, and the castings are independent in that one is located to the rear of the other. This is an entirely different specific construction from that disclosed by applicant and as specified in his claims. A most decided advantage is secured in applicant's specific construction and arrangement in that each casting being applied to one face only of one of the supporting sills serves to reenforce said sill at a point where the greatest strain occurs in apparatus of this nature. Applicant, therefore, secures a more efficient construction of draft rigging, one in which the greatest strength is provided in a most simple and economical manner at the point where the greatest strain occurs. The blocks or castings C, in the reference do not reenforce the supporting sills, but on the contrary, are merely bolted to the sills and hence there is no distribution of the strains imposed upon the apparatus as is the case in applicant's construction and the entire strain is taken by the securing bolts which hold the blocks or castings to the sills. In applicant's case the strains are distributed through the castings to the sills, and the securing bolts by which the castings are secured to the sills are not required to take the entire strains. Claim 1 has been redrawn in order to bring out more clearly and definitely this feature of applicant's construction. Claim 2 has been omitted. Claims 3, 4, 5, and 6, present claims 2, 3, 4, and 5, specifically recite this construction and feature of applicant's arrangement of parts.

243

The reference fails to disclose this idea. We submit, therefore, that applicant has made a decided improvement and advance in the art, and we ask an allowance of the case as now presented.

Very respectfully,

BROWN & DARBY,
Attorneys for Applicant.

Chicago, Ill., October 15, 1901.

D.—C.

[Endorsed:] Serial No. 61,678. Paper No. 6. Amendment C. Filed Oct.-17-1901. Wm. H. Emerick. U. S. Patent Office, Oct. 17, 1901, Division XXXIV.

244 2-260.

Div. —, Room 281.

Address only "The Commissioner of Patents, Washington, D. C.," and not any official by name.

Paper No. —.

All communications respecting this application should give the serial number, date of filing, title of invention, and name of the applicant.

W. F. F. DEPARTMENT OF THE INTERIOR, E. P. H.
UNITED STATES PATENT OFFICE,
WASHINGTON, D. C., Nov. 2, 1901.
Mailed " " "

William H. Emerick, care Brown & Darby, 1123 Monadnock Bldg., Chicago, Ill.:

Please find below a communication from the Examiner in charge of your application for Draft Rigging for Cars, filed May 24, 1901, Serial No. 61,678.

F. I. ALLEN,
Commissioner of Patents.

The claims as amended Oct. 17, 1901, have been examined.

Claim 1 is rejected on the patent to Mitchell, of record.

The remaining claims, as at present advised, are thought to be allowable.

G. R. SIMPSON,
Examiner, Div. 34.

W. F. F.

[Endorsed:] Serial No. 61,678, Paper No. 7. Rejection. Dated Nov.-2-1901. Wm. H. Emerick.

245 In the United States Patent Office.

Hon. Commissioner of Patents, Washington, D. C.

SIR: In the matter of the application of William H. Emerick for Draft Rigging for Cars, Serial No. 61,678, filed May 24, 1901, Room 281, and in response to the Examiner's letter dated Nov. 2, 1901, please amend as follows:

√*Cancel claim 1.*

Adjust the ordinals of the remaining claims.

Very respectfully,

BROWN & DARBY,
Attorneys for Applicant.

Chicago, Ill., Dec. 7, 1901.

[Endorsed:] Serial No. 61,678, Paper No. 8. Amendment. Filed Dec.-9-1901. Wm. H. Emerick. U. S. Patent Office, Dec. 10, 1901, Division XXXIV Mail Room, Dec. 9, 1901, U. S. Patent Office.

246 2–260.

Div. —, Room 281.

Address only "The Commissioner of Patents, Washington, D. C.," and not any official by name.

Paper No. —.

All communications respecting this application should give the serial number, date of filing, title of invention, and name of the applicant.

W. F. F. DEPARTMENT OF THE INTERIOR, E. P. H.
UNITED STATES PATENT OFFICE,
WASHINGTON, D. C., Dec. 24, 1901.
Mailed " " "

William H. Emerick, care Brown & Darby, 1123 Monadnock Bldg., Chicago, Ill.:

Please find below a communication from the Examiner in charge of your application for Draft Rigging for Cars, filed May 24, 1901. Serial No. 61,678.

F. I. ALLEN,
Commissioner of Patents.

The claims as amended Dec. 9, 1901, are as at present advised allowable, but before the case can be passed to issue, the drawing to which objection has been previously made, must be corrected.

EDWARD O. FORNEY,
Acting Examiner, Div. 34.

W. F. F.

[Endorsed:] Serial No. 61,678, Paper No. 9. Office Letter. Dated Dec. 24, 1901. Wm. H. Emerick.

247 In the United States Patent Office.

Hon. Commissioner of Patents, Washington, D. C.

SIR: In the matter of the application of Wm. H. Emerick for Draft Rigging for Cars, Serial No. 61,678, filed May 24, 1901, Room 281, and in response to the Examiner's letter dated Dec. 24, we have this day requested the Patent Office Draftsman to make correction of the illustration in Fig. 2, under the supervision of the Examiner.

This correction removes all objection to the allowance of this case, and the early allowance thereof is requested.

Very respectfully,

BROWN & DARBY,
Attorneys for Applicant.

Chicago, Ills., Dec. 28, 1901.

D.—C.

[Endorsed:] Serial No. 61,678, Paper No. 10. Letter to Office. Filed Dec. 30, 1901. Wm. H. Emerick. U. S. Patent Office, Dec. 31, 1901, Division XXXIV. Mail Room, Dec. 30, 1901, U. S. Patent Office.

Account.

In the United States Patent Office.

Hon. Comissioner of Patents, Washington, D. C.

SIR: In the matter of the application of Wm. H. Emerick for Draft Rigging for Cars, Serial No. 61,678, filed May 24, 1901, Room
248 281, and in compliance with the requirements of the Examiner, we hereby authorize and request the Patent Office Draftsman to correct Fig. 2 to close the space indicated in pencil at "X" on the accompanying blue print, and which as at present shown indicates that the slots in the yoke 15, through which the coupling pin 17, passes are of equal width with the openings, 18, 19, in the side sills 8 and 9. In the actual construction such arrangement would be inoperative, as the purpose of the key 17, is to effect a drawing action upon the yoke 15, therefore the space between the pin 17 and the outer end of yoke 15, should be shown closed by cross-hatching it to the forward edge of key 17.

Please make this correction under the personal supervision of the Examiner, and charge the cost of same to our account.

Very respectfully,

BROWN & DARBY,
Attorneys for Applicant.

Chicago, Ill., Dec. 28, 1901.

D.—C.

[Endorsed:] Serial No. 61,768, Paper No. 11. Letter to Office. Filed Dec.-30-1901. Wm. H. Emerick. C. Brown & Darby. U. S. Patent Office Letter Number 196,193, Series of —. Filed in Div. A, Dec. 30, 1901, and received. Received Dec. 30, 1901, in Div. C. Dr'w'g Corrected and to Exam'r Jan. 8/02. No Charge. Forward to Mail room for Div. 34 Jan. 8/02. Mail Room transfer to Div. 34, 1, 9, '02. U. S. Patent Office, Jan. 9, 1902, Division XXXIV.

249 Serial No. 61,678.

Issue Division.

All communications should be addressed to "The Commissioner of Patents, Washington, D. C."

DEPARTMENT OF THE INTERIOR,
U. S. PATENT OFFICE,
WASHINGTON, D. C., January 15, 1902.

William H. Emerick, c/o Brown & Darby, 1123 Monadnock Bldg., Chicago, Ill.:

SIR: Your application for a patent for an improvement in Draft Rigging for Cars Filed May 24, 1901, has been examined and allowed.

The final fee, Twenty Dollars, must be paid, and the Letters Patent bear date as of a day not later than six months from the time of this present notice of allowance.

If the final fee is not paid within that period the patent will be withheld, and your only relief will be by a renewal of the application, with additional fees, under the provisions of Section 4897, Revised Statutes. The Office aims to deliver patents upon the day of their date, and on which their term begins to run; but to do this properly applicants will be expected to pay their final fees at least twenty days prior to the conclusion of the six months allowed them by law. The printing, photolithographing, and engrossing of the several patent parts, preparatory to final signing and sealing, will consume the intervening time, and such work will not be done until after payment of the necessary fees.

When you send the final fee you will also send, distinctly
250 and plainly written, the name of the inventor and title of the invention as above given, date of allowance (which is the date of this circular), date of filing, and, if assigned, the names of the assignee.

If you desire to have the patent issue to assignees, an assignment containing a request to that effect, together with the fee for recording the same, must be filed in this Office on or before the date of payment of final fee.

Additional copies of Specifications and Drawings will be charged for at the following rates: Single Copies, uncertified, 5 cents each. The money should accompany the order.

Very respectfully,

F. I. ALLEN,
Commissioner of Patents.

After allowance, and prior to payment of the final fee, applicants should carefully scrutinize the description to see that their statements and language are correct, as mistakes not incurred through the fault of the office, and not affording legal grounds for reissues, will not be corrected after the delivery of the letters patent to the patentee or his agent.

[Diagonally across the page from left to right:] In remitting the final fee give the serial number at the head of this notice.

[On right-hand side:] If payment is made by check or draft, the credit allowed is subject to the collection of the same.

251 Amount Received, $20, C'k. Y. Chief Clerk.

Law Offices of Brown and Darby, 1123-1124-1125 Monadnock Block, 260 Dearborn St.

CHICAGO, Jan. 27, 1902.

Hon. Commissioner of Patents, Washington, D. C.

SIR: Enclosed please find our check for $20.00, which please apply in payment of the final Government fee in the application of William H. Emerick for Draft Rigging, filed May 24, 1901, allowed Jan. 15, 1902.

Please forward the patent to us when issued.

Very respectfully,

BROWN & DARBY.

Ser. No. 61,678.

[Endorsed:] Mail Room, Jan. 30, 1902, U. S. Patent Office.

252 United States Patent Office.

William H. Emerick, of Chicago, Illinois.

Draft-rigging for Cars.

Specification Forming Part of Letters Patent No. 693,643, Dated February 18, 1902.

Application Filed May 24, 1901. Serial No. 61,678. (No Model.)

To all whom it may concern:

Be it known that I, William H. Emerick, a citizen of the United States, residing at Chicago, in the county of Cook and State of Illinois, have invented a new and useful Draft-Rigging for Cars, of which the following is a specification.

This invention relates to draft-rigging for cars.

The object of the invention is to provide a construction of draft-rigging for cars which is simple and efficient and wherein renewal of the coupling bar or arm in case of breakage may be effected easily and readily.

Other objects of the invention will appear more fully hereinafter.

The invention consists substantially in the construction, combination, location, and arrangement of parts, all as will be more fully hereinafter set forth, as shown in the accompanying drawings, and finally pointed out in the appended claims.

Referring to the accompanying drawings, and to the various views and rereference-signs appearing thereon, Figure 1 is a top plan view of a draft-rigging constructed in accordance with the principles of my invention, parts being broken out and in section. Fig. 2 is a horizontal longitudinal section of the same on the line 2 2 of Fig. 3 looking in the direction of the arrows. Fig. 3 is a view in side elevation. Fig. 4 is a view in vertical longitudinal section on the line 4 4, Fig. 1, looking in the direction of the arrows. Fig. 5 is a transverse
253 section of the line 5 5 of Fig. 4 looking in the direction of the arrows. Fig. 6 is a view similar to Fig. 1, showing a slightly-modified arrangement of parts embraced within the spirit and scope of my invention. Fig. 7 is a view in vertical longitudinal section on the line 7 7 of Fig. 6.

In the practical operation of cars the coupler arm or bar by which one car is attached at its end to the next adjacent car is subjected to a heavy usage by reason of the pull exerted thereon when the cars are coupled up and by reason of the impact thereon during the coupling operation. By reason of this heavy usage breakage of the coupler arm or bar frequently occurs. In prior constructions of draft-rigging for cars embodying means of attachment of the coupler-arm to the car-body it has been necessary in making repairs or replacements of the coupler arm or bar to remove the draft-rigging from the supporting-sills. This consumes time and involves the taking apart and replacement of the parts of the draft-rigging, which is a practical objection the present invention is particularly designed to overcome, and in accordance with the principles of my invention I provide a construction of draft-rigging which is exceedingly simple and efficient and wherein the coupling arm or bar may be readily removed and replaced in case of breakage without the necessity of removing, taking apart, or replacing the draft-rigging.

In the drawings I have shown various constructions and arrangements of draft-rigging embodying the principles of my invention.

Referring to Fig. 1, reference-signs 8 and 9 designate the side sills constituting the frame-work upon which the draft-rigging is supported and to which the rigging is connected, said sills being bolted or otherwise connected to the car-body in the ordinary manner.

Reference-signs 10 and 11 designate counterpart castings respectively mounted upon the rigging-sills 8 9. Said castings are provided with flanges 12, arranged to receive the sills 8 9 therebetween to afford efficient means for clamping or bolting said castings to said sills, said castings being mounted upon the opposed inner faces or sides of the sills 8 9, respectively. On the inner opposed faces of castings 10 11 are formed co-operating guideways 13 14, each adapted to receive a leg 15 16 of a U-shaped belt or strap, which constitutes the draft-strap. The outer ends of the legs 15 16 are slotted to receive therethrough a key or pin 17. The sills 8 and 9 are also correspondingly slotted in alinement with each other and with the free
254 ends of the legs 15 16, the ends of the key 17 extending into the slots 18 19 in said sills, as clearly shown in Fig. 2.

Reference-sign 20 designates the coupler arm or bar, which may be of the usual ordinary construction and having a transverse slot or

opening therethrough, as shown in Figs. 2 and 4, to receive therethrough the pin or key 17. In this manner the coupler-arm may be detachably connected to the ends or legs 15 16 of the draft yoke or strap. The slots 18 19 in the sills 8 9 should be of sufficient size or area to afford clearance for lateral movements of the key 17 under the exigencies of the impact or draft imposed thereon in coupling or in hauling a car. Interposed between the end of the coupler-arm 20 and the connecting web portion 21 of the draft-yoke- is a suitably-arranged spring, which may be of the ordinary construction and arrangement, such as is usually employed in draft-riggings for the purpose of relieving the shock and jar of the pulls or impact imposed upon the coupler arm or bar in use.

I have shown in Figs. 1, 2, 3, and 4 a simple arrangement of spring or spring-buffer comprising end plates 22, 23, suitably connected together by rods 24 25, upon which said plates loosely slide. Upon each rod is mounted the coiled springs 26 27. All the parts of the spring-buffer mentioned constitute a connected frame arranged to be received between the castings 10 11 and held in place by the flanges 28, which flanges, if desired, may be made removable to afford access to said springs when desired. The plate 22 of the spring-buffer is arranged to take bearing against the web or connecting portion 21 of the draft-yoke, and the plate 23 of the buffer is arranged to take bearing against the inner end of the coupler arm or bar, as most clearly shown in Figs. 2 and 4.

From the foregoing description it will be seen that when a pull is exerted upon the coupler-arm the buffer-plate 23 will take bearing against the shoulders 30 of the castings 10 11, which thereby constitute a stop for said buffer-plate, and the pull exerted upon the coupler-arm 20 is transmitted through the draft-yoke and is imposed upon the buffer-plate 22, which being movable and loosely mounted upon the bolts 24 is drawn yieldingly toward the plate 23, thereby imposing a compression upon the springs 26 27. Similarly in case of an endwise impact upon the coupler-arm—as when two cars come together, for instance—the buffer-plate 22 strikes against the shoulder 31
255 (see Fig. 1) of the castings 10 11, and the endwise projection of coupler-arm 20 forces the buffer-plate 23 toward plate 22 and imposes a compressive tension upon the springs. In this manner the parts are relieved of shock or jar. If desired, the ends of the key or pin 17 may be retained in place and said pin or key prevented from working out of place by means of keepers 32 33.

From the foregoing description it will be seen that in case of breakage of the coupler arm or bar the same may be removed and replaced without disturbing the other parts of the draft-rigging by merely removing the keeper or keepers 32 33 and withdrawing the locking key or pin 17, and when the new coupler arm or bar is inserted the same may be quickly locked or secured to the draft-rigging by again inserting the locking pin or key 17 in place through the openings 18 19 in the sills 8 9 and the openings in the ends of the legs 15 16 of the draft yoke and through a transverse opening in the coupling-arm.

The construction shown in Figs. 6 and 7 differs from that above

described with reference to Figs. 1, 2, 3, 4, and 5 only in the arrangement of the buffer-springs. For instance, the construction and arrangement shown in Figs. 1 to 5 and above described is known in the art as a "twin" arrangement, and the construction shown in Figs. 6 and 7 is known in the art as the "tandem" arrangement, of springs—that is, in the one case the set of springs are arranged side by side, whereas in the construction shown in Figs. 6 and 7 said springs 40 41 and 42 43 are arranged one behind and in line with the other, each set of springs being held between relatively movable buffer-plates 44 45 46 47. In the construction shown in Figs. 6 and 7, however, two locking pins or keys 48 49 are employed, the pin 49 passing transversely through the sills 50 51 and and the ends 52 53 of the coupling-yoke and also through the coupler-arm 20, and the other passing transversely through slots or openings in the sills 50 51 and between the two sets of buffer-springs, said key 48 forming a stop or shoulder for buffer-plate 46, and the rear connecting-web of the yoke-strap forming a bearing for the corresponding plate 44 of the other set of springs to effect a compression of the springs under the influence of a pull exerted upon the coupler-arm, and said key 48 forming an abutment for plate 45 of the one set of springs, while the end of the coupling-arm 20 forms an abutment for the corresponding plate 47 of the other set of buffer-springs to effect the compression of said springs under the influence of an impact imposed longitudinally upon the coupler-arm. In other respects the construction in the two cases may be the same.

256

It is obvious that my invention is not to be limited or restricted to any particular construction or arrangement of buffer-springs, and other forms of buffer-springs, may be employed in connection with my invention without departure from the spirit or scope thereof. It is also obvious that changes and variations in the details of construction and arrangement of parts would suggest themselves to persons skilled in the art and still fall within the spirit and scope of my invention. I do not desire, therefore, to be limited or restricted to the exact details shown and described; but,

Having now set forth the object and nature of my invention and constructions embodying the principles thereof, what I claim as new and useful, and desire to secure by Letters Patent, is—

1. A draft-rigging for cars comprising side sills, independent counterpart castings mounted upon the opposed sides or faces of said sills, said castings provided with shoulders and having co-operating longitudinally-extending seats or ways in the opposed faces thereof, follower-plates arranged to be received between said castings and operating between said shoulders, the ends of said plates extending into and working in said seats or ways, springs interposed between said plates, a draft-yoke loosely seated between said castings and arranged to straddle said plates, a coupler-arm and a removable key for connecting said coupler-arm to said draft-yoke and sills, as and for the purpose set forth.

2. A draft-rigging for cars comprising side sills, independent counterpart castings mounted upon the opposed faces of said sills and having longitudinal ways or seats formed in the opposed faces

thereof, follower-plates arranged to be loosely received between said castings and having their ends extending and working in said ways or seats, springs interposed between said follower-plates, a draft-yoke loosely mounted between said castings and arranged to straddle said plates, a coupler-arm, said coupler-arm, draft-yoke and sills being provided with registering slots or openings, and a locking-key adapted to be removably received in said openings, as and for the purpose set forth.

3. A draft-rigging for cars comprising side sills having
257 elongated longitudinally-extending slots or openings, counterpart castings mounted on the opposed faces of said sills, a coupler-arm having an opening therethrough, a draft-yoke loosely mounted between said castings and having the sides thereof received in longitudinal seats formed in the opposed faces of said counterpart castings, a locking key or pin passing through said coupling-arm and draft-yoke and having its ends received in the elongated slots in said sills, and yielding means interposed between said draft-yoke and casting, as and for the purpose set forth.

4. A draft-rigging for cars comprising side sills, independent counterpart castings mounted thereon and provided with longitudinally-extending seats or ways on the opposed faces thereof, said castings also provided with shoulders arranged to project into said seats or ways, a draft-yoke having its sides received in the seats or ways in said castings, a coupling-arm, a removable key for locking said arm to said yoke and sills, follower-plates extending transversely between said castings and having their ends received in said seats or ways and adapted to be engaged by said yoke when moved in one direction and by said coupling-arm when moved in the other direction, and a spring-buffer mounted in said castings and between said plates, said shoulders limiting the movement of said plates, as and for the purpose set forth.

In witness whereof I have hereunto set my hand, this 22d day of May, 1901, in the presence of the subscribing witnesses.

WILLIAM H. EMERICK.

Witnesses:
C. S. DARRACH.
S. E. DARBY.

258 213. Railway Draft Appliances, Drawbars.

1901.

Contents.

½. Application, 1 paper[s].* O. K.
1. Rejection, June-29-1901.
2. Amendment A, July 15, 1901.

[* Words and figures enclosed in brackets erased in copy.]

3. Rejection, July-26-1901.
4. Amendment B, Aug. 15-1901.
5. Rejection, Sep. 5-1901.
6. Amendment C, Oct. 17, 1901.
7. Rejection, Nov.-2-1901.
8. Amendment, Dec. 9-1901.
9. Letter, Dec. 24-1901.
10. Letter to office, Dec. 30-1901.
11. " " Dec. 30-1901.

Title: Improvements in Draft Rigging for Cars.

[Endorsed:] M. E. K. M. H. A. S. M. 267,302/14.

259 Filed Aug. 6, 1914.

And on to-wit: the sixth day of August, 1914, there was filed in the clerk's office of said Court in said entitled cause a certain Opinion by Judge Sanborn, in words and figures following to wit:

Opinion.

District Court of the United States, Northern District of Illinois, Eastern Division.

In Equity. No. 30700.

THE T. H. SYMINGTON COMPANY, Complainant,

vs.

WILLIAM H. MINER, Defendant.

Edwin F. Samuels and Steuart & Steuart, of New York City and Rufus S. Simmons, of Chicago, for plaintiff.

Munday, Evarts, Adcock & Clarke and Haight, Brown & Haight of Chicago, for defendant.

Suit on the Emerick Patent No. 693,643, applied for May 24, 1901, granted February 18, 1902.

This is the common case of a specific patent, strictly limited to the particular construction described in the claims, covering a draft-rigging for railway cars. Its merit is entirely practical, the sole claim to invention being the production of a simple, workable device in any art where practicability, economy of space, easy and rapid detachment and putting back in place, are the only considerations of any importance, not only from the standpoint of the earlier art, but from the impossibility of getting any device on a railroad car except one of the highest efficiency. Defendant's device, as described in its

patent, could not infringe, nor could it probably be put on
260 railroad cars. Instead of constructing it as described defendant has adopted plaintiff's construction. It makes a strong argument that Emerick shows no invention, but adopts his device for its own construction. While novelty cannot be supplied by defendant's use of a patent device, such use amounts to a quasi estoppel. As a specific combination of old elements, designed for practical use, the Emerick construction should be narrowly sustained, especially in view of defendant's adoption of that construction, unless the Byers Patent of May 7, 1901, No. 673,419, is prior to Emerick. As to this question testimony was taken in open court to carry back the date of invention of Emerick so as to antedate Byers, and was abundantly sufficient for that purpose. I was satisfied at the time, and on review of the testimony am confirmed in the conviction, that Emerick's invention was considerably earlier than that of Byers.

While very narrow in scope, the Emerick device is so simple, and so easy to repair and maintain, that it should be sustained, especially in view of defendant's leaving its own precise construction and adopting it.

Decree for plaintiff sustaining its patent, declaring it infringed and for profits, damages and costs.

August 6, 1914.

By the Court:

A. L. SANBORN, *Judge.*

[Endorsed:] Filed Aug. 6, 1914, T. C. McMillan, Clerk.

(Here follow diagrams marked pp. 261 to 323.)

(No Model.)

W. V. PERRY.
Bumper.

No. 228,385. Patented June 1, 1880.

Fig. 1.

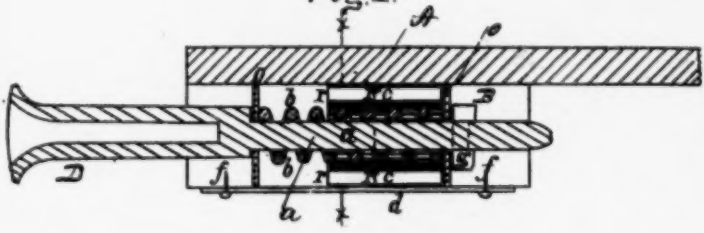

Fig. 2.

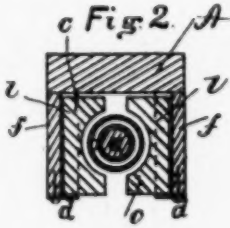

Fig. 3.

570
Symington Co.
of
Nat Mal. Cost Co
} $262

Witnesses:
J. J. McCarthy,
H. Aubrey Poulmin

Inventor:
By Wm V. Perry.
Alexander Mason,
att,

X

COPY BOUND C

UNITED STATES PATENT OFFICE.

WILLIAM V. PERRY, OF BEAVER DAM, WISCONSIN.

BUMPER.

SPECIFICATION forming part of Letters Patent No. 228,385, dated June 1, 1880.

Application filed April 9, 1880. (No model.)

To all whom it may concern:

Be it known that I, WILLIAM V. PERRY, of Beaver Dam, in the county of Dodge, and in the State of Wisconsin, have invented certain new and useful Improvements in Car-Couplings; and I do hereby declare that the following is a full, clear, and exact description thereof, reference being had to the accompanying drawings, and to the letters of reference marked thereon, making a part of this specification.

My invention relates to car-couplings; and it consists in blocks arranged in the box or casing for the draw-bar spring, for the purpose of relieving the spring from being overworked from either direction from a pull or push of the engine, as will be hereinafter more fully set forth.

In order to enable others skilled in the art to which my invention appertains to make and use the same, I will now proceed to describe its construction and operation, referring to the annexed drawings, in which—

Figure 1 is a longitudinal section of a draw-bar, spindle, spring, and block embodying my invention. Fig. 2 is a cross-section of the spindle, spring, bunter-sticks, and blocks. Fig. 3 is a perspective view of one of the blocks used.

A represents the car-floor timbers, to the under side of which is attached the housing or case B.

D is the draw-bar, provided with the spindle or bolt *a*. On this bolt is placed the spiral spring *b*, with a follow-iron, *o*, at each end thereof, and a pin or nut, *g*, fastened in or on the bolt back of the rear iron.

f f are the bunter-sticks, to which are attached stops to limit the movement of the follow-iron.

These parts are all constructed and arranged substantially in the same manner as in other car-couplings of this class.

C C represent movable blocks or spring-protectors, placed between the follow-irons *o* on both sides of the spring, and are shorter than the distance between said irons when the spring is extended. These blocks form stops, or a limit beyond which the spring cannot be contracted when forced in either direction, and by this means the spring is relieved from being overworked from either direction from a pull or push of the engine.

Instead of the movable blocks I may use a short block at or near the center, and made fast to the bunter-sticks, or held in any secure manner; and if the spring should be worked only in one direction a block may be fastened at back end, and answer the same purpose.

Having thus fully described my invention, what I claim as new, and desire to secure by Letters Patent, is—

In a car-coupling having a spring or springs at the rear end of the draw-bar, one or more moving blocks, which wholly or partially surround the spring, arranged to relieve the same from being overworked, substantially as herein set forth.

In testimony that I claim the foregoing I have hereunto set my hand this 6th day of April, 1880.

WM. VOORHEES PERRY.

Witnesses:
J. H. VINCENT,
R. E. LIBBY.

x (Here follows diagram marked p. 266)

268) X

No. 635,322. Patented Oct. 24, 1899.

J. A. HINSON.

HEAD BLOCK FOR RAILWAY CARS.

(Application filed Feb. 8, 1899.)

(No Model.) 2 Sheets—Sheet 1.

Fig. 1.

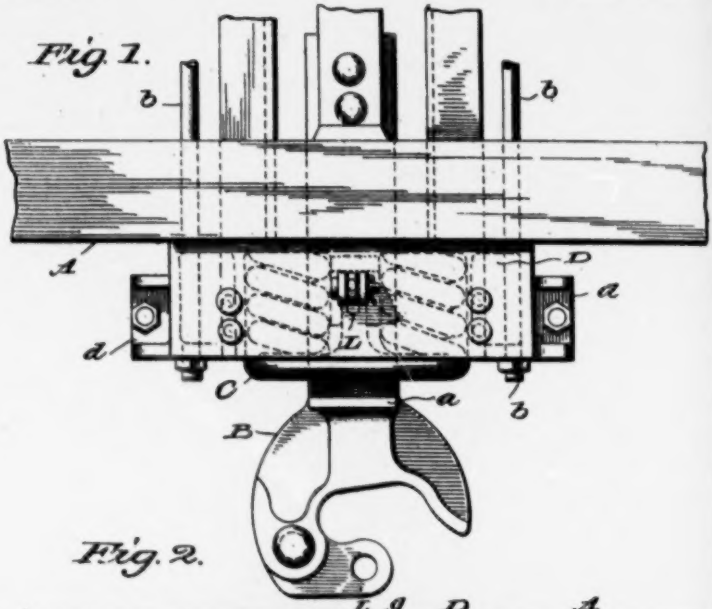

Fig. 2.

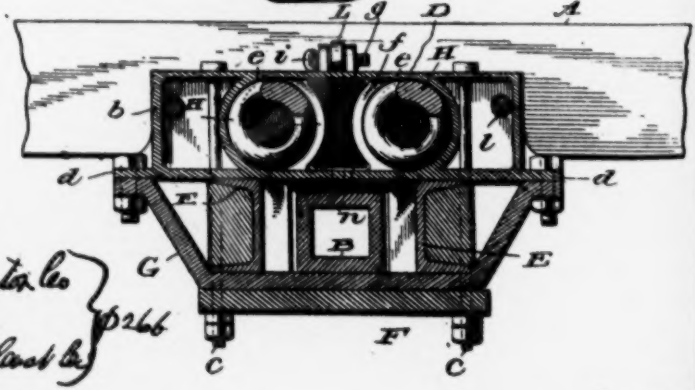

570
Symington Co
&
Nat Mal Cast Co
p266

Witnesses
L. C. & Cills.
Frank Montgomery

X

Inventor
James A. Hinson
By W. A. Redmond
Attorney

No. 635,322. Patented Oct. 24, 1899.

J. A. HINSON.

HEAD BLOCK FOR RAILWAY CARS.

(Application filed Feb. 3, 1899.)

(No Model.) 2 Sheets—Sheet 2.

Fig. 3.

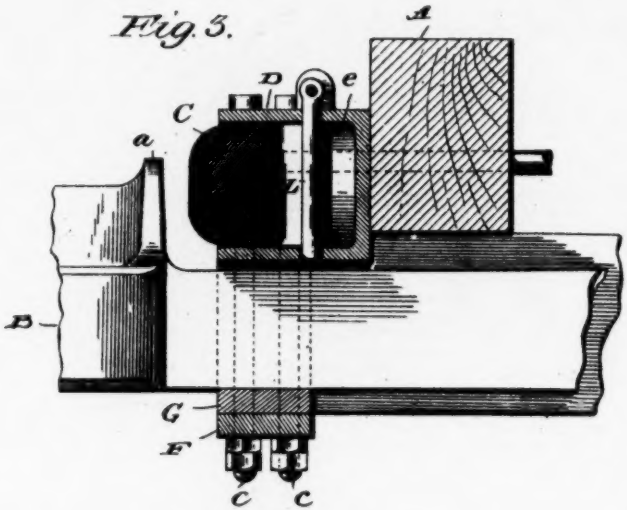

Fig. 4.

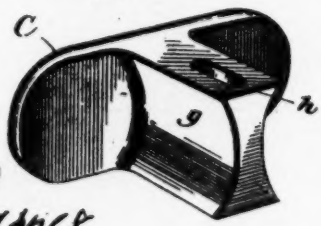

570
Symmington Co
&
Nat Meal Cast Co.
} $268

Witnesses
L. C. Hills.
Frank Montgomery

Inventor
James A. Hinson
By W. A. Redmond
Attorney

X

UNITED STATES PATENT OFFICE.

JAMES A. HINSON, OF CHICAGO, ILLINOIS.

HEAD-BLOCK FOR RAILWAY-CARS.

SPECIFICATION forming part of Letters Patent No. 635,322, dated October 24, 1899.

Application filed February 3, 1899. Serial No. 704,375. (No model.)

To all whom it may concern:

Be it known that I, JAMES A. HINSON, a citizen of the United States, residing at Chicago, in the county of Cook and State of Illinois, have invented certain new and useful Improvements in Head-Blocks for Railway-Cars; and I do declare the following to be a full, clear, and exact description of the invention, such as will enable others skilled in the art to which it appertains to make and use the same.

This invention relates generally to railway-cars, and particularly to buffing devices therefor; and it has for its object to provide a simple, durable, and effective buffing device and head-block adapted to relieve the cars of the injurious effects from the violent shocks to which they are subjected when in use; and it consists of the parts and combinations of parts hereinafter described and claimed.

In the accompanying drawings, forming a part of this specification, Figure 1 is a plan view of my invention; Fig. 2, a vertical transverse section on the line *y y*, Fig. 1; Fig. 3, a vertical section on the line *x x*, Fig. 1; and Fig. 4, a detail perspective view of the buffing-head.

Similar letters refer to similar parts throughout all the views.

Referring to the drawings, A represents the end sill of a railway-car, and B a car-coupler of the Janney type. The coupler may be provided with any desired or preferred form of knuckle and locking device, and it may be connected with any preferred form of draft-rigging and work equally well with my hereinafter-described buffing device. The draw-head, however, is cast or otherwise provided with a vertical flange *a*, adapted, when the coupler is drawn back, to engage the buffing-head C, mounted in the head-block D. The head-block D is preferably formed of metal and secured to the end sill by means of bolts *b* and rests on and is secured to the draft-sills E by vertical bolts *c*, which also serve to secure the bar F and the strap-iron G, which carry the free end of the draw-bar, to the head-block and draft-sills. The strap-iron G is carried up and bolted to ears or lugs *d*, formed on the ends of the head-block. The head-block D is formed with the cylindrical pockets *e* to receive the buffing-springs H, the inner or adjacent walls *f* of the pockets *e* do not extend to the outer surface or face of the head-block, but terminate in rear of the same in order to provide the necessary space for the play of the buffing-head, the stem *g* of which enters the slot or opening *n* between said walls *f* and extends into a recess (shown in dotted lines, Fig. 1) formed in the head-block, in which position it is secured by means of a bolt or pin L, inserted through an opening in the head-block and passing through an elongated opening *h* in the stem *g* of the buffing-head. The bolt or pin L is secured in position by means of a key *i*, passed through said pin or bolt. The buffing-head C fits easily at all points in the openings to the pockets *e* and engages the springs therein to relieve the car to which it is attached, as well as those which may be brought into violent contact with it, of the injurious effects of violent buffing whether the cars operating against it be supplied with buffing devices or are not so supplied. The draft-sills E are shown as made of channel-iron and provided with a wood filling; but the latter is not absolutely necessary and may be left out.

Having thus described my invention, what I claim as new, and desire to secure by Letters Patent, is—

1. A head-block for railway-cars having adjacent pockets formed therein, springs arranged in said pockets, and a buffing-head secured intermediate of said pockets in said head-block and adapted to engage said springs.

2. A head-block for railway-cars having pockets formed therein and a slot or opening intermediate said pockets, springs arranged in said pockets, an elongated buffing-head having a central stem adapted for insertion in said slot, and means for limiting the movement of said buffing-head.

In testimony whereof I affix my signature in presence of two witnesses.

JAMES A. HINSON.

Witnesses:
JAS. H. ZEARING,
CECIL TH. FARMER.

Here follow diagrams marked p. 272 (p. 274) X

(No Model.) 2 Sheets—Sheet 1.

C. FROST.

CAR COUPLING.

No. 532,272. Patented Jan. 8, 1895.

Fig: 1.

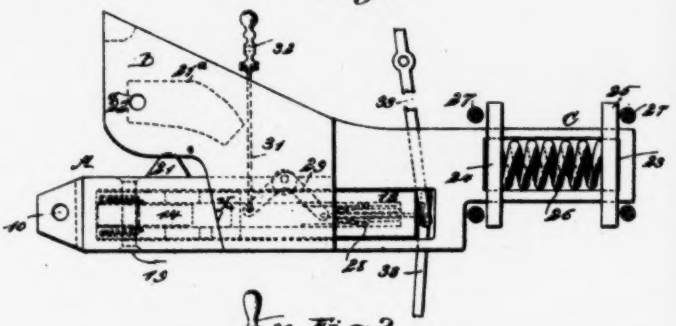

Fig: 2.

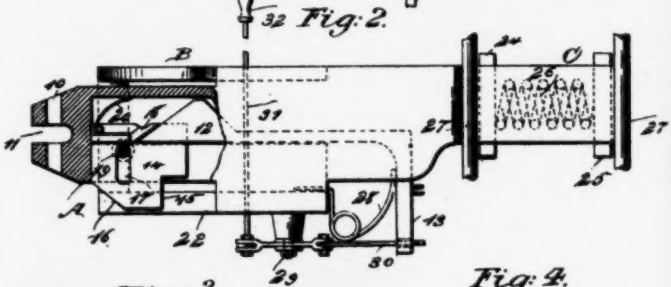

Fig: 3.

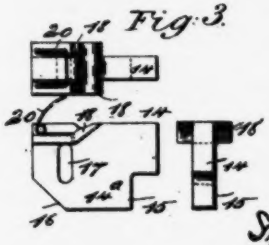

Fig: 4.

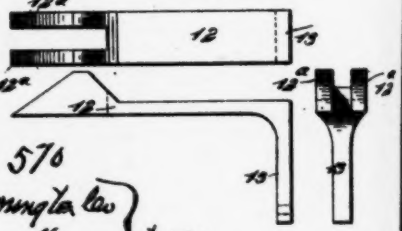

576

Spring Car Co
v
Nat Mal Cast Co } $272

WITNESSES:

John G. Rennie

John de Ackey

INVENTOR

C. Frost

BY

Munn & Co

ATTORNEYS.

X

(No Model.) 2 Sheets—Sheet 2.

C. FROST.

CAR COUPLING.

No. 532,272. Patented Jan. 8, 1895.

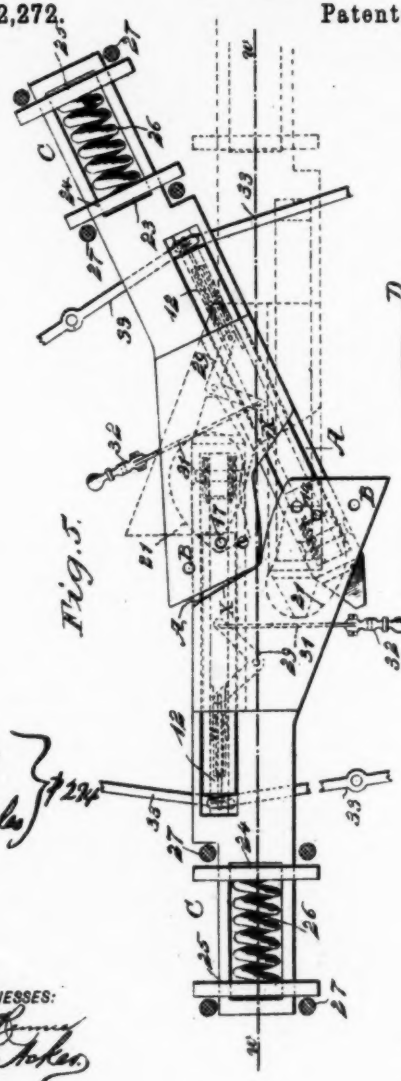

Fig. 5.

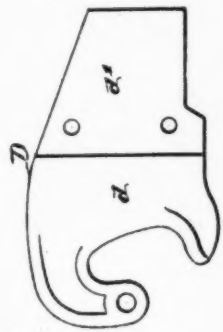

Fig. 6.

570
Symington Co
&
Nat Mal Cast Co
} $294

WITNESSES:
John A. Rennie
J. Fred. Acker

INVENTOR
C. Frost
BY Munn & Co
ATTORNEYS.

X

THE NORRIS PETERS CO., PHOTO-LITHO., WASHINGTON, D. C.

UNITED STATES PATENT OFFICE.

CARMAN FROST, OF HEWLETT'S, NEW YORK.

CAR-COUPLING.

SPECIFICATION forming part of Letters Patent No. 532,272, dated January 8, 1895.

Application filed March 19, 1894. Serial No. 504,198. (No model.)

To all whom it may concern:

Be it known that I, CARMAN FROST, of Hewlett's, in the county of Queens and State of New York, have invented a new and useful Improvement in Car-Couplers, of which the following is a full, clear, and exact description.

My invention relates to an improvement in car couplers, and it has for its object to improve upon the construction of the car couplers shown and described in the patent granted to me December 12, 1893, No. 510,854, the improvement consisting in providing a gravity coupling dog which will automatically couple with an opposing drawhead, by being first raised through contact with the drawhead and then dropping of its own weight into the socket prepared to receive it, and whereby also a spring may be applied to the coupling dog to insure its returning to its coupling or normal position and remaining straight while in said position.

A further object of the invention is to provide a slide adapted to act upon the coupling dog in a manner to elevate said dog and hold it in an elevated position to effect a coupling.

Another feature of the invention consists in the construction of a car coupling in which a pin section will be combined with a drawhead section, the two sections being placed substantially side by side and located in such manner that the line of draft will be immediately through the center of the drawbar and the center of the coupling proper.

The invention consists in the novel construction and combination of the several parts, as will be hereinafter fully set forth and pointed out in the claims.

Reference is to be had to the accompanying drawings, forming a part of this specification, in which similar figures and letters of reference indicate corresponding parts in all the views.

Figure 1 is a plan view of the improved coupler. Fig. 2 is a side elevation thereof, a portion of the side being broken away. Fig. 3 represents respectively a plan, side elevation and edge view of the coupling dog. Fig. 4 represents respectively a plan view, a side elevation and an edge view of a slide employed in uncoupling the dog. Fig. 5 is a plan view of two of the drawheads coupled, one coupling being at an angle to the other, the coupling out of alignment being shown in straight position in dotted lines; and Fig. 6 is a plan view of a knuckle adapted to be inserted in the drawhead to couple with an opposing knuckle coupler.

The coupler is constructed practically in two sections, a coupling section A and a drawhead section B. The coupling section at its forward or outer end is beveled at its top, bottom and sides, preferably in direction of its center, being provided with a vertical recess 10 to receive a coupling pin when the coupler is to be used in connection with an opposing link and pin coupler; and the coupling section is further provided with a horizontal opening 11 communicating with the opening 10, the horizontal opening or recess being adapted to receive a link.

Within the coupling section A of the coupler a slide 12 has guided movement, the coupling section being grooved or otherwise provided with slide-ways to receive the slide. The slide at its outer end is bifurcated, as shown in Fig. 4, the bifurcated parts being designated at 12*; and the bifurcated portion of the slide is more or less triangular in side elevation, as shown in Figs. 2 and 4.

The slide at its rear end is provided with a downwardly extending arm 13, whereby the slide is manipulated in a manner to be hereinafter set forth. The slide 12 is adapted for use in connection with a coupling dog 14. This dog is shown in detail in Fig. 3, and comprises a body 14*, provided preferably with a recess 15 at its rear bottom portion and a beveled or inclined front lower face 16. The coupling dog is also provided with a vertical slot 17, located preferably between its center and its forward end, and over the slot 17 at the upper portion of the coupling dog opposing side flanges 18, are constructed, which flanges are horizontal or straight at the front portion of the coupling dog and are upwardly inclined at their rear ends, the inclined portions of the flanges being adapted for engagement with the forward inclined faces of the bifurcated portion of the slide 12, as illustrated.

The coupling dog is held within the coup-

X

ling section A of the coupler by passing a pin 19 through the slot 17 of the dog, said pin being firmly held in the said coupling section, as illustrated in dotted lines in Fig. 1; and in order that the coupling dog shall be held in its lower position ready for coupling, and in order that it may be quickly and positively returned to its lower position when elevated from any cause, a spring 20, is made to bear upon the upper forward portion of the coupling dog and against the upper wall of the said coupling section as illustrated in Fig. 2.

The drawhead B is preferably carried over the coupling section A, and between the inner side of the forward portion of the drawhead and the corresponding face of the coupling section a space is made to intervene, as shown in Fig. 1, and a triangular block or lug 21, is made to extend across this space into the mouth of the drawhead, in order that an opposing coupling section will be compelled to enter the said drawhead. The drawhead is likewise provided with an opening 22 in its bottom wall, said opening being adapted to receive the coupling dog 14; and an aperture 22^a is likewise made in the drawhead to receive a pin should the drawhead be required to couple with an opposing drawhead of the link and pin type.

The drawhead and coupling sections are practically one casting or forging at the rear of the coupler, and the drawbar section C, is made usually integral with the united portions of the drawhead and coupling sections at one side of the latter, the drawbar section being so located that a line drawn through the drawbar center will likewise pass approximately centrally between the drawhead B and the coupling section A. The drawbar section is provided with a slot or opening 23 in which two opposing slides 24 and 25 have movement, a spring 26 being located between said slides. The coupler is usually affixed to the car through the medium of clips 27, located at its drawbar section, or any equivalent thereof may be used.

The slide 12 is held out of lifting engagement with the coupling dog yet in engagement with its flange by means of a spring 28, which may be of any character and may be applied in any approved manner but preferably, as shown in the drawings, the spring has bearing against the rear end of the bottom portion of the coupling section A, and likewise against the extension 13 of the slide. Thus when the slide is drawn in direction of the coupling dog it will compress the spring 28, and when the slide is released it will return to its normal position.

The slide may be moved in many ways, one of which is shown in the drawings, and it consists in pivoting below the coupling section A a bell crank lever 29, one member of which is connected by a link 30 with the lower end of the slide extension 13, while the other end of the lever is connected by a link 31 with a hand lever 32, adapted to be fulcrumed to any support at the side of the car or side of the platform, and this form of lever is primarily used as a platform lever, and by drawing the lever in direction of the coupling section, the elbow lever 29 will be rocked upon its fulcrum in such a manner as to draw the slide 12 forward, and the slide will travel down the inclined surface of the flange 18 of the coupling dog, and then to an engagement with the straight surface of the flange, lifting the coupling dog a sufficient distance to disengage it from any object with which it had been in contact.

Upon freight cars, or other cars in which an uncoupling is to be effected at the sides thereof, two levers 33, are employed, and these levers are fulcrumed to any support on the under portion of the car, and their inner ends are made to bear against the extension 13 of the slide 12. Thus by drawing the said levers 33 in direction of the opposite end of the car the inner ends of the levers will force the slide in an inwardly direction and thereby carry the coupling dog to its uncoupling position.

When a coupling is to be effected, the coupling section of one coupler will enter the drawhead section of the opposing coupler, and the coupling dogs will be automatically lifted as they enter the drawhead sections, and will then drop into the openings 21^a in the said drawhead sections, as shown in Fig. 5. It will be observed that the line of draft W, W, in both couplings is purely a central one.

When two opposing drawheads are coupled, the draft openings 21 in each drawhead section will be practically in transverse alignment, whereby the draft tension upon both couplers is equalized. In Fig. 5 I have illustrated the inclined buffing face of the drawhead section more sharply inclined than the corresponding face in Fig. 1, as by so doing I am enabled as shown in the said Fig. 5 to couple and uncouple, both dogs being in operation when the cars are upon a curve having a radius of at least twenty-five degrees, and if only one dog is brought into action the coupling and uncoupling may be made upon a curve of forty degrees radius.

It is frequently necessary to couple with an opposing drawhead of the knuckle type. In this event the knuckle D, shown in Fig. 6, including the hook body *d* and shank *d'* may be employed. The shank is slipped into the mouth of the drawhead section D, of the coupler and secured by bolts passed through suitable apertures in said section and shank.

Having thus described my invention, I claim as new and desire to secure by Letters Patent—

1. A car coupler provided with a coupling section, a coupling dog loosely located in the said section, capable of rising and falling, being adapted to gravitate downward, a drawbar section located at the side of the coup-

ling section and provided with a keeper to receive the coupling dog of an opposing coupler, and a slide having an inclined face and adapted to meet a corresponding face on the coupling dog, as and for the purpose set forth.

2. A car coupler comprising a coupling section, a coupling dog located within said section, adapted to have free upward and downward movement, said coupling dog being provided with a vertical slot and flanges at each side of its upper portion, a pin passed through the slot of the coupling dog and secured in the coupling section, a slide having inclined faces adapted to engage with the flanges of the coupling dog, a drawhead section located at one side of the coupling section and provided with a keeper, and means, substantially as shown and described, for manipulating the slide, as and for the purpose set forth.

3. A car coupler, comprising a drawhead, a coupling dog located in said drawhead, provided with a vertical slot and flanges at its upper forward portion upon opposite faces, said flanges being provided with an inclined rear face and a straight forward face, a spring having bearing against the coupling section and against the upper portion of the coupling dog, a slide bifurcated at one end to receive the coupling dog, and provided with inclined faces meeting corresponding faces on the dog flanges, a pin supporting the coupling dog in the coupling section, being passed through the slot thereof, a drawhead located at one side of the coupling section and provided with a keeper, a drawbar section located at the rear of the coupler and centrally with respect to its forward end, and shifting levers, substantially as shown and described, acting upon the said slide, as and for the purpose specified.

CARMAN FROST.

Witnesses:
J. FRED ACKER,
C. SEDGWICK.

x Here follow diagram o marked p. 280

(282) X

570
Symington Co.
v.
Nat. Mal. Cast Co. } 228

(No Model.) 2 Sheets—Sheet 1.

C. FROST.

CAR COUPLING.

No. 510,854. Patented Dec. 12, 1893.

Fig. 1.

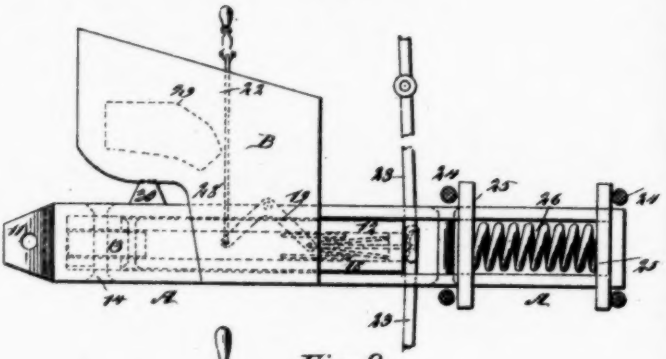

Fig. 2.

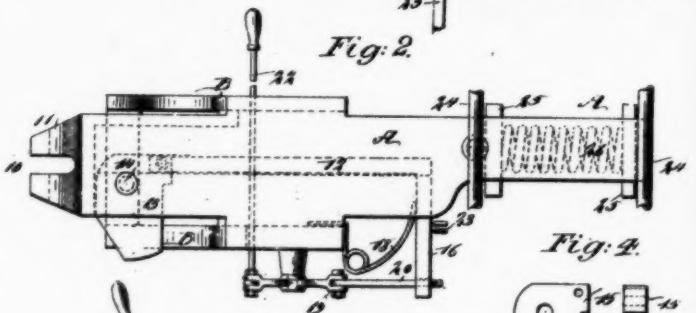

Fig. 4.

Fig. 3.

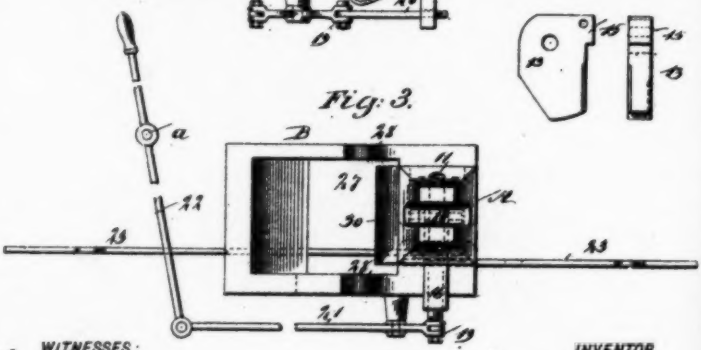

WITNESSES:
John A. Penne
C. Bedgwick

INVENTOR
C. Frost
BY Munn & Co
ATTORNEYS.

(No Model.) 2 Sheets—Sheet 2.

C. FROST.

CAR COUPLING.

No. 510,854. Patented Dec. 12, 1893.

570
Symington Co
v
Nat Mal Coast
Co.
p 282

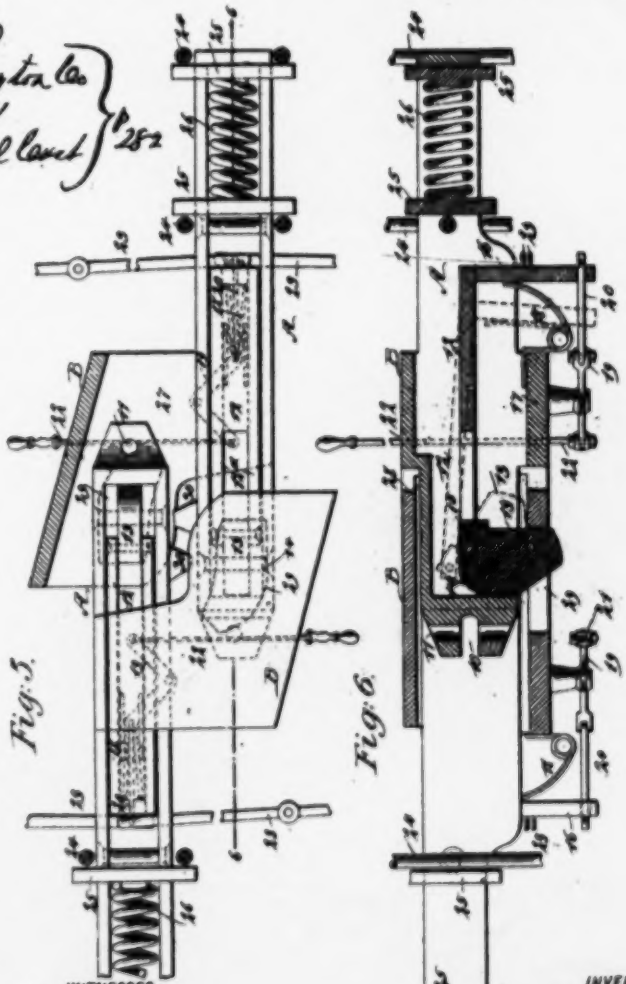

Fig. 5.

Fig. 6.

WITNESSES:
John A. Rennie
C. Sedgwick

INVENTOR
C. Frost
BY
Munn & Co
ATTORNEYS.

X

UNITED STATES PATENT OFFICE.

CARMAN FROST, OF HEWLETT'S, NEW YORK.

CAR-COUPLING.

SPECIFICATION forming part of Letters Patent No. 510,654, dated December 12, 1893.

Application filed August 16, 1893. Serial No. 483,260. (No model.)

To all whom it may concern:

Be it known that I, CARMAN FROST, of Hewlett's, in the county of Queens and State of New York, have invented a new and Improved Car-Coupler, of which the following is a full, clear, and exact description.

My invention relates to an improvement in car couplers, and it has for its object to provide a car coupler of an exceedingly simple type, one which will be durable and economic in its construction, and which will be capable not only of coupling with another of its kind but with any coupler of the link and pin type.

A further object of the invention is to provide a car coupler which may be coupled with an opposing coupler upon a curved as well as upon a straight track, and to provide a simple and convenient mechanism for effecting an uncoupling either from a platform or from the sides of a car, avoiding the necessity of persons standing between, or in the slightest degree entering the space between opposing drawheads.

Another feature of the invention consists in so constructing the coupler that the drawbar thereof will be the coupling medium while the drawhead will be simply a receiving medium.

The invention consists in the novel construction and combination of the several parts, as will be hereinafter fully set forth and pointed out in the claims.

Reference is to be had to the accompanying drawings forming a part of this specification, in which similar figures and letters of reference indicate corresponding parts in all the views.

Figure 1 is a plan view of the improved coupler. Fig. 2 is a side elevation thereof. Fig. 3 is a front elevation. Fig. 4 represents a side elevation and edge view of the coupling dog. Fig. 5 is a plan view of two couplers in a coupled position, a portion of one of the drawheads being in section; and Fig. 6 is a longitudinal section through the coupled couplers, the section being taken practically on the line 6—6 of Fig. 5.

The coupler is constructed practically in two sections, a drawbar section A and a drawhead section B. The drawbar section at its forward or outer end is beveled from the top, bottom and sides preferably in direction of the center, being provided with a horizontal recess 10, to receive the link of an opposing link coupler, and a vertical aperture 11 adapted to receive a coupling pin when a link is entered into the recess 10. Within the drawbar a coupling slide 12 has longitudinal and horizontal movement, the sides of the drawbar being grooved or provided with other forms of slide-ways receiving the slide. The forward end of the slide is usually bifurcated, as shown in Fig. 5, and the members 12ª at the bifurcated end of the slide are made to receive between them the upper rear end of a coupling dog 13, which coupling dog near its upper forward end is pivoted in the forward portion of the drawbar chamber in which the slide is located, usually through the medium of a pin 14. The coupling dog is usually formed with a projection 15 at its upper rear end, and to this projection the slide 12 is attached. The rear edge of the coupling dog, is preferably made straight, while its forward face at the bottom is beveled, as shown best in Fig. 5, in a downwardly and rearwardly direction, while the lower end is beveled or curved in an upwardly and rearwardly direction, as is shown in both Figs. 4 and 6. The slide 12 at its rear end is usually provided with a branch 16, and this branch is ordinarily made to project downward through the bottom of the drawhead chamber, as is also best shown in Fig. 6, the drawhead chamber being open at its bottom in its front and rear portions, but closed at its central portion by a section of flooring 17.

The coupling dog is normally in coupling position, and in this position it extends below the bottom of the drawhead chamber, and its upper forward edge will at that time be in engagement with the forward wall of said chamber. The dog is held in this position by means of a spring 18, which may be of any character and may be applied in any approved manner; but preferably, as shown in the drawings, the spring has bearing against the rear end of the bottom section 17 of the drawhead chamber, and against the branch 16 of the slide, a coil being located between the two ends of the spring. When the slide is drawn in a forwardly direction, the dog will be rocked upon its center in such manner as to carry its lower end upward within the drawbar cham-

ber, as shown in dotted lines in Fig. 6, and this position of the dog is its uncoupling position.

The slide 12, may be moved in many ways, one of which is shown in the drawings, and it consists in pivoting below the drawbar a bell crank lever 19, one member of which is connected by a link 20, with the lower end of the slide extension 16, while the other end of the lever is connected by a link 21 with a hand lever 22, adapted to be fulcrumed, for example, at the point a shown in Fig. 3, to any support at the side of the car or side of a platform, and this form of lever is primarily used as a platform lever, and by drawing the lever in direction of the drawbar the elbow lever 19, will be rocked upon its fulcrum in a manner to draw the slide 12 forward, as shown in dotted lines in Fig. 6.

Upon freight cars, or other cars in which an uncoupling is to be effected at the sides thereof, two side levers 23, are employed, and these levers are fulcrumed to any support on the under portion of the car and their inner ends are made to bear against the extension 16 of the slide, as shown in the drawings. Thus by drawing the side levers 23 in direction of the opposite end of the car, the inner ends of the levers will force the slide in an inwardly direction, and thereby carry the coupling dog to its uncoupling position.

The drawbar is supported beneath the car preferably by means of yokes 24, which yokes are secured at their upper ends to the beams of the car, or to any convenient or proper support; and between the yokes two buffing slides 25, are located, separated by a spring 26, the said slides and spring being adapted to take up and receive the buffing strain upon the coupler.

The drawhead B, is attached to the drawbar and extends beyond one side thereof, the drawhead, as shown in the section in Fig. 5, being provided with a single chamber 27, the outer side wall whereof is usually inclined; and the said chamber is open at its front and likewise at its back. The drawhead is much narrower where it extends over the drawbar than its body portion; therefore, a recess 28, is made in the front edge of the drawhead, rendering the front line thereof somewhat irregular. This is done in order that the body portion of an opposing drawhead will engage with the recessed portion of the drawhead with which it is to couple, as shown in Fig. 5, and the meeting of the drawheads, if by any chance they should meet, will limit their movement in coupling. In the bottom wall of the drawhead chamber an opening 29, is made, which opening is adapted to receive the coupling dog 13 when a coupling is effected; and into the drawhead chamber projects a guide rib 30, formed upon the side of the drawbar, and said guide ribs are somewhat triangular in cross section, the side walls being inclined. Thus, as is shown in [illegible] fected upon a curve, for example, the drawbar entering the opposing drawhead will bring its guide rib in engagement with the guide rib of the drawbar of the opposing coupler, and as the two inclined surfaces meet, the entering drawbar will be forced to ride in such position in the drawhead it enters as to cause the coupling dog to enter positively the slot in the drawhead.

The coupling is thoroughly automatic, since when two couplers come together the coupling dogs of one will ride over the bottom of the drawhead of the other and enter its opening 29. Thus it will be observed in coupling that a drawbar is made to enter each drawhead. By means of this form of coupler the cars are enabled to ride freely, they may be coupled quite close together, or the coupler may be made to provide for any desired distance between the drawheads; and furthermore, as heretofore stated, the coupler is strong, it is economic, may be readily attached to any car, and will couple upon a curve as well as upon a straight line of track.

Having thus described my invention, I claim as new and desire to secure by Letters Patent—

1. A car coupler, comprising a drawbar, a coupling dog located in the drawbar, a drawhead located at one side of the drawbar and provided with a keeper adapted to receive the coupling dog of an opposing coupler, and a trip mechanism connected with the coupling dog, substantially as shown and described.

2. In a car coupler, a drawbar, a coupling dog pivoted therein, a mechanism for rocking the coupling dog, and a drawhead located at one side of the drawbar and provided with a keeper to receive the coupling dog of an opposing coupler, and guides to direct an entering drawbar, as and for the purpose set forth.

3. In a car coupler, the combination, with a drawbar having a buffing cushion at one end, a dog pivoted near its forward end, and a spring-controlled slide connected with the dog whereby it is raised and lowered, of a drawhead connected with the drawbar and located at one side thereof, the drawhead being provided with a keeper to receive the coupling dog of an opposing coupler, substantially as shown and described.

4. In a car-coupler, the combination, with a drawbar adapted to enter an opposing drawhead, of a coupling dog pivoted therein, normally maintained in a vertical and coupling position, a spring-controlled slide connected with the dog, and levers whereby the slide is manipulated, as and for the purpose set forth.

5. In a car coupler, a drawbar provided with a coupling dog and means for operating the same, and having its forward end shaped to receive a coupling pin and link, and a drawhead located at one side of the drawbar and connected therewith, the drawhead being provided with a keeper to receive the coupling

dog of an opposing coupler, substantially as shown and described.

6. In a car coupler, a drawbar, a coupling dog pivoted therein, and an actuating mechanism, substantially as shown and described, connected with the dog, a drawhead located at one side of the drawbar, having a keeper adapted to receive the coupling dog of an opposing drawbar, and a guide provided with beveled faces, located adjacent to the keeper in the drawhead and adapted to direct the entering drawbar, as and for the purpose set forth.

7. The combination with a chambered drawbar, of an angular and spring pressed slide in the draw bar, a coupling dog pivoted in the draw bar and connected with the slide, and means for moving the slide forward and tilting the same, substantially as described.

8. The combination with a chambered draw bar of a slide having its forward end bifurcated and provided with a downwardly projecting branch, a spring between the branch of the slide and the end of the chamber of the draw bar, a coupling dog pivoted in the draw bar and pivotally connected with the slide, and means connected with the branch of the slide for operating said slide, substantially as described.

CARMAN FROST.

Witnesses:
J. FRED. ACKER,
E. M. CLARK.

x(Here follows diagram marked p. 288

x 290) x

(No Model.) 2 Sheets—Sheet 1.

P. M. REAGAN.

DRAFT RIGGING FOR CARS.

No. 491,785. Patented Feb. 14, 1893.

Fig. 1.

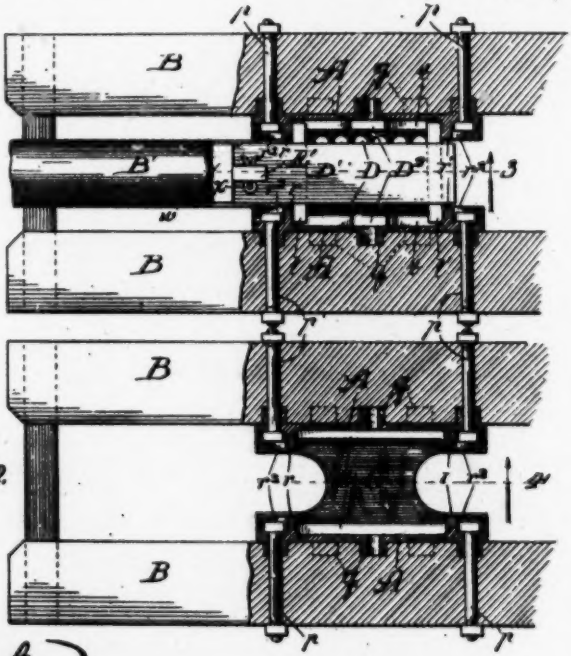

Fig. 2.

370
Symington Co.
v.
Nat. Mal. Cast Co.
} 288

Fig. 3.

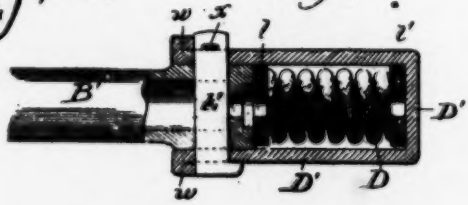

Witnesses:
C. E. Shepherd
Clifford A. Hill

Inventor:
Paul M. Reagan.
By Dyrenforth & Dyrenforth.
Attys.

(No Model.) 2 Sheets—Sheet 2.

P. M. REAGAN.

DRAFT RIGGING FOR CARS.

No. 491,785. Patented Feb. 14, 1893.

570.
Symington Co.
Nat. Mal. Cast Co. } p 291

Fig. 4

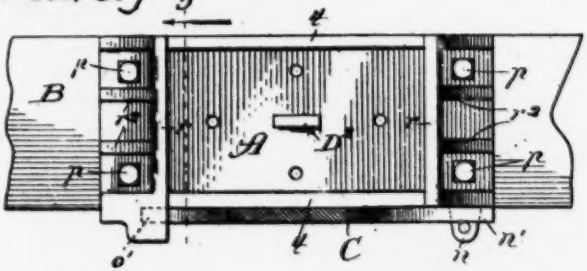

Fig. 5.

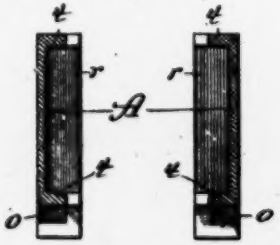

Fig. 6.

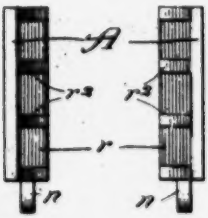

Fig. 7.

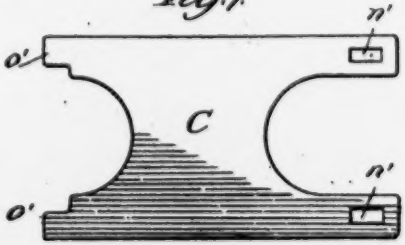

Witnesses:
[illegible]
Clifford [illegible]

Inventor:
Paul M. Reagan
By Dyrenforth & Dyrenforth,
Attys

UNITED STATES PATENT OFFICE.

PAUL M. REAGAN, OF CHICAGO, ILLINOIS.

DRAFT-RIGGING FOR CARS.

SPECIFICATION forming part of Letters Patent No. 491,785, dated February 14, 1893.

Application filed May 7, 1892. Serial No. 432,186. (No model.)

To all whom it may concern:

Be it known that I, PAUL M. REAGAN, a citizen of the United States, residing at Chicago, in the county of Cook and State of Illinois, have invented a new and useful Improvement in Draft-Rigging for the Draw-Bars of Railway-Cars, of which the following is a specification.

The object of my invention is to provide a generally improved construction of draft-rigging, one of the principal advantages of which consists in the convenience it affords in separating the parts and in their adjustment, as for removing a broken draft-spring and inserting a perfect one in its place, another being the relative stability of the parts between which the draft-spring is confined, and still another being the simplicity of the construction.

My improvement is illustrated in the accompanying drawings, in which—

Figure 1 is a broken sectional plan view showing the rear portion of a draw-bar between the draft-timbers, between which is supported my improved rigging connected at its forward end with the rear end of the bar. Fig. 2 is a similar view with all but the cheek-plates and the tie-plate therefor of the details of my improvement, removed. Fig. 3 is a section taken at the line 3 on Fig. 1, viewed in the direction of the arrow, and showing the yoke detail of my improvement embracing the spring confined between follower-plates, and the connection between the yoke and draw-bar. Fig. 4 is a section taken on the line 4 of Fig. 2 and viewed as indicated by the arrow. Fig. 5 is a section taken at the line 5 on Fig. 4 and viewed in the direction of the arrow. Fig. 6 is a rear end view of the two cheek-plates. Fig. 7 is a plan view of the tie-plate.

A A are the cheek-plates, which should be formed, for strength, with the inward extending transverse flanges r and r', near their opposite ends, braced by ribs r^2 the better to withstand the impact of the follower-plates hereinafter described. I provide, as the means for securing the cheek-plates to the opposing sides of the draft-timbers B, studs q cast on the outer surfaces of the cheek-plates and let into sockets provided in the draft-timbers to receive them. These materially increase the desired rigidity of the cheek-plates in their operative positions and relieve of strain the bolts p, which fasten them in place. In the forward end of each cheek-plate, at its base, is a horizontal recess or pocket, o, opening backward, and in corresponding position at the rear end of each, is a depending perforated lug n, these serving to retain in place a tie-plate C, for the two cheek-plates. I adapt the tie-plate, which may be a flat casting, to enter, at its forward end, the pockets o in the corresponding ends of the bases of the cheek-plates, by providing it with tongues o' and at opposite sides of the rear end of the plate C are eyes n' to fit over the depending lugs n, through which a pin or pins may be inserted to support the tie-plate at its rear end.

Before adjusting the tie-plate as described, the principal function of which is to unite the cheek-plates and prevent them from moving independently under unequal draft-strain that may be exerted against them, I insert the follower-plates l and l', which are confined between upper and lower flanges i on the cheek-plates, and in turn confine between them the draft-spring D, which, as will be observed, has and requires no guide-rod extending longitudinally through it, but is controlled against displacement by a yoke D′ covering it on top and below and forming at its rear closed end an abutment for the follower-plate l', and by stops or flanges D^2 projecting from the surfaces of the cheek-plates, near their centers, against opposite sides of the spring. These stops D^2 may be used to advantage even where the yoke is not provided; and they should be adequately strong to form stops for the follower-plates. When the spring and its yoke and follower-plates have been adjusted into place, the tie-plate C is placed and secured in position in the manner described, and may, obviously, be easily and quickly removed when desired, as for taking out the spring.

The foregoing construction enables me to connect the draft-rigging from its forward end with the rear end of the draw-bar B', whereby the separation of the parts may be readily accomplished, without disturbing the draw-bar, by simply withdrawing them backward after removing the pins referred to as sustaining the tie-plate and the means for

X

connecting the draft-rigging with the draw-bar, which need be only a pin E inserted through the forward end of the yoke and rear end of the draw-bar over which the yoke fits, the pin affording also an abutment for the follower-plate *l* and being shown as secured by a cotter-pin *x*. To increase the wearing surface for the pin E, I thicken the yoke on its outer surfaces, as shown at *w* (Fig. 3) at the front side of the pin-opening.

By my improvement, as will thus be seen, a compact, strong, simple and convenient construction is afforded: independence of the cheek-plates is overcome without permanently uniting them; the countersunk studs which aid in supporting them in place, relieve the fastening-bolts of strain, and form an advantageous substitute for the means commonly provided for the purpose and involving a flange extending across the back of each cheek-plate, which requires the cutting of a groove, to admit it, across the face of the adjacent timber, whereby the latter is materially weakened; separation of the parts of the draft-rigging may be readily accomplished without requiring the draw-bar to be disturbed, and without, as in some constructions known to me, necessitating the preliminary withdrawal of numerous bolts and, in some instances, the taking down of the cheek-plates; and the usual rod or bolt, extending lengthwise through the spring to prevent its lateral movement, or displacement out of the line of draft, is dispensed with.

It should be mentioned that the tie-plate feature of my improvement may be used to advantage even if the yoke be permanently fastened at its forward end to the draw-bar, thus otherwise than by the removable pin. Then the tie-plate may be adjusted after the yoke and its contained spring and both follower-plates have been raised to place between the two cheek-plates, the tie-plate in that event supporting the rigging, since there would then be no lower supporting flanges for the follower-plates on the cheek-plates.

What I claim as new and desire to secure by Letters Patent is—

1. In a draft-rigging for the draw-bars of railway-cars, the combination with the draft-timbers of cheek-plates having pockets *o* in corresponding ends and provided at their opposite ends with lugs *n*, and a tie-plate removably inserted at one end into the said pockets and having at its opposite end eyes engaging the said lugs, substantially as described.

2. In a draft-rigging for the draw-bars of railway-cars, the combination with the draft-timbers of cheek-plates bolted to, and formed with studs *q* countersunk into, the draft-timbers, and a tie-plate connecting the cheek-plates at their bases, substantially as described.

3. In a draft-rigging for the draw-bars of railway-cars, the combination with the draft-timbers of cheek-plates having pockets *o* in corresponding ends and provided at their opposite ends with perforated lugs *n*, and a tie-plate C having at one end tongues *o'* at which to support it in the said pockets, and having at its opposite end eyes *n'* to embrace the said lugs, substantially as described.

4. In a draft-rigging for the draw-bars of railway-cars, the combination with the draft-timbers, draw-bar and draft-spring, of cheek-plates on the opposing sides of the draft-timbers, and stops D^3 projecting from the inner surfaces of the cheek-plates toward opposite sides of the draft-spring, substantially as and for the purpose set forth.

5. In a draft-rigging for the draw-bars of railway-cars, the combination with the draft-timbers and draw-bar of cheek-plates on the opposing sides of the draft-timbers and provided near their centers with abutting-lugs D^3 for the opposite sides of the draft-spring, a yoke D' connected with the draw-bar and embracing the draft-spring and follower-plates between which the spring is confined, and a tie-plate C removably supported on the cheek-plates and forming a separable base for the rigging, substantially as described.

6. In a draft-rigging for the draw-bars of railway-cars, the combination with the draft-timbers B and draw-bar B', of cheek-plates A having pockets *o* in their forward ends and provided at their rear ends with perforated lugs *n*, said cheek-plates being bolted to, and having formed on them studs *q* countersunk into, the timbers, a tie-plate C supported at its forward end in the said pockets and provided at its rear end with eyes *n'* engaging the said lugs, a yoke D' embracing the draft-spring D and follower-plates between which the spring is confined, a pin E inserted through the forward end of the yoke and rear end of the draw-bar and removably secured in place, and lugs D^3 on the cheek-plates to abut against the opposite sides of the spring, the whole being constructed and arranged to operate substantially as described.

PAUL M. REAGAN.

In presence of—
M. J. FROST,
J. M. HANSON.

x Here follows diagram marked p. 2941
X

No. 627,540. Patented June 27, 1899.

J. E. SIMONS.

DRAFT RIGGING.

(Application filed Sept. 10, 1898.)

(No Model.)

Fig. I.

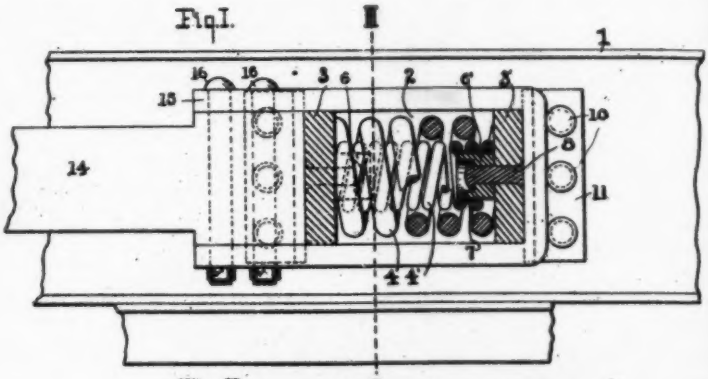

Fig. II.

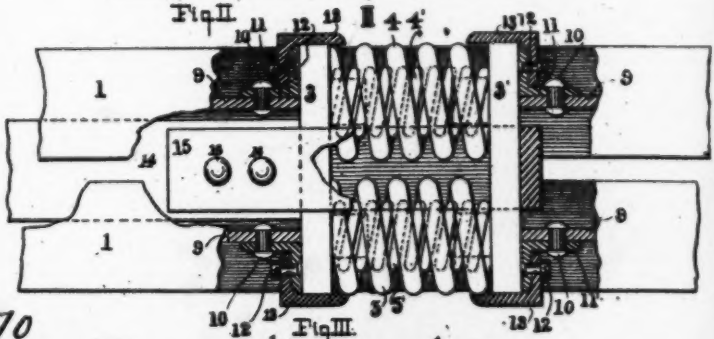

Fig. III.

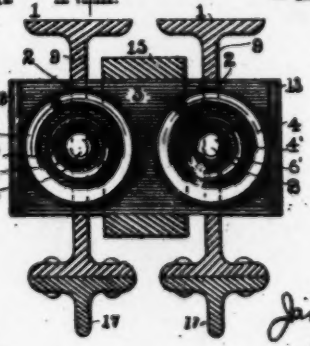

570
Symington Co
v
Nat Mal Cast Co
p 294

WITNESSES:

Geo. H. Harvey.
M. H. Caskey.

INVENTOR
James E. Simons,
BY Wm. L. Pierce,
his ATTORNEY.

X

UNITED STATES PATENT OFFICE.

JAMES E. SIMONS, OF McKEES ROCKS, PENNSYLVANIA.

DRAFT-RIGGING.

SPECIFICATION forming part of Letters Patent No. 627,840, dated June 27, 1899.

Application filed September 10, 1898. Serial No. 690,831. (No model.)

To all whom it may concern:

Be it known that I, JAMES E. SIMONS, a citizen of the United States of America, and a resident of McKees Rocks, Allegheny county, Pennsylvania, have invented certain new and useful Improvements in Draft-Riggings, of which the following is a specification.

Figure I in the accompanying drawings is a side elevation, partly in section. Fig. II is a plan view with the flanges of the I-beams partly broken away. Fig. III is a cross-section on line III III of Fig. I.

In draft-riggings as heretofore ordinarily constructed the strain occasioned by compression has been transmitted by the draw-bar to sets of springs. Through these springs the strain has been transmitted to follower-plates which abut at their ends against braces or lugs fastened to the sides of the sills. One of the serious objections to the construction just described is that the car-sills receive the strain in an angling direction and with considerable leverage, which tends to tear off the braces or lugs. Another type of construction embodies the use of a separate metal draft-rigging having two side plates between which the springs are located, said draft-rigging being secured at its rear end to the end of a subsill. Besides possessing other disadvantages this construction is necessarily expensive and complex.

The purpose of my invention is to devise a location for the springs in slots or openings in the sills themselves, so that the strain which they receive may be transmitted immediately and directly along the longitudinal central axis of the car-sills. By this method of construction the strongest part of the car construction receives the stress and on straight lines.

My invention is applicable both to cars having metallic or wooden sills, and I have illustrated the same in connection with a car having its two sills made of I-beams; but I do not intend to limit my application to such use of metallic sills, as it would be feasible to cut away wooden sills and locate the springs in similar relation thereto.

In the several views which make part of this specification, 1 1 are two I-beams, which form the sills on the car and usually extend the whole length thereof. At or near the ends of said beams a slot 2 is cut in their web. This cutting away affords an opening for the spring follower-plates 3 3', between which are compressed four cushioning-springs 4 4' and 5 5'. These springs are held in position by nipples 6 6', each having a recess 7, in which is seated a rivet 8, attaching said nipple to its respective follower-plate.

Fastened to the web 9 9 of the I-beams by rivets 10 10 are bracing angling irons 11. Secured to said angle-irons 11 by means of bolts 12 are the guides 13 13 for the follower-plates 3 3'.

To the shank of the draw-bar 14 the yoke 15 is attached by means of bolts 16 16. These yokes inclose the spring follower-plates 3 3'.

17 17 are suitable reinforcements riveted to the under side of the I-beams 1 1 to compensate for the metal removed in slotting the webs of said I-beams. These reinforcements may extend to any desired length.

It will now be apparent that when the car is in use and operating the strain or compression received by the springs from either of the follower-plates 3 3' will be immediately and directly transmitted in straight lines to the webs or center of the I-beams and by them transmitted the whole length of the car. In other words, the strain will be received squarely along the longitudinal axis of the car-sills, which is the part and the direction best adapted to resist such shock. The main object of the braces 11 is to give a wider bearing to receive the pressure of the follower-plates than would be afforded by the narrow web alone, and thus keep the follower-plates in better alinement. It will be observed that each pair of springs acts upon the web of its own respective beam and that all four of the springs act simultaneously and always in transmitting every strain, so that I secure the total resistance of four springs to resist each stress.

Like all constructions of this character many minor mechanical changes may be made by the skill of the car-builder while still appropriating the peculiar features of my invention, and I therefore do not limit myself in the broader claims appended to the exact features shown in the drawings

X

Having described my invention, I claim—

1. In draft-riggings, the combination of recessed and slotted car-sills, springs moving therein and operatively connected to the draw-bar, so that the strain received by said springs will be transmitted along the longitudinal axis of said sills.

2. In draft-riggings, a combination of two I-beam car-sills, having their webs slotted at or near the ends of said I-beams; springs suitably moving in said slotted webs and operatively connected to the draw-bar, so that the strain received by said springs will be transmitted along the webs of said I-beams.

3. In draft-riggings, a combination of two I-beam car-sills, having their webs slotted at or near the ends of said I-beams; springs suitably moving in said slotted webs and operatively connected to the draw-bar, so that the strain received by said springs will be transmitted along the webs of said I-beams and reinforcements along the length of said I-beams to compensate for the slotting of the webs.

4. In draft-riggings, a combination of two I-beam car-sills, having their webs slotted at or near the ends of said I-beams; a yoke secured to the rear end of the draw-bar shank; spring follower-plates adapted to slide in said yoke and in the slotted webs and springs suitably moving between said follower-plates and in the slots of the sills so that the strain received by said springs will be transmitted along the webs of said I-beams.

5. In draft-riggings the combination of I-beam car-sills having their webs slotted at or near their ends; angle-braces bolted to said webs; a yoke secured to the rear end of the draw-bar shank; spring follower-plates adapted to move within said yoke and within the slots of the I-beams and bear against the webs of said I-beams and the angle-braces bolted thereto and springs suitably mounted between said follower-plates and in the slots of the sills so that the strain or compression received by said springs may be transmitted along the webs of said I-beams.

6. In draft-riggings, the combination of I-beam car-sills having their webs slotted at or near their ends; angle-braces bolted to said web at the ends of said slot; guide-pieces secured to said angle-braces; a yoke attached to the rear end of the draw-bar shank; spring follower-plates adapted to move within said yoke and within the slots of the webs and springs suitably secured between said follower-plates, in the slots of said sills.

Signed by me this 7th day of September, 1898.

JAMES E. SIMONS.

Witnesses:
WM. L. PIERCE,
M. W. CASKEY.

Here follow diagram marked p. 298

301

X

570
Symington Co } p 298
Nat Mal Cont Co

(No Model.) 2 Sheets—Sheet 1.

W. H. MINER.

DRAFT RIGGING FOR CARS.

No. 570,038. Patented Oct. 27, 1896.

FIG I

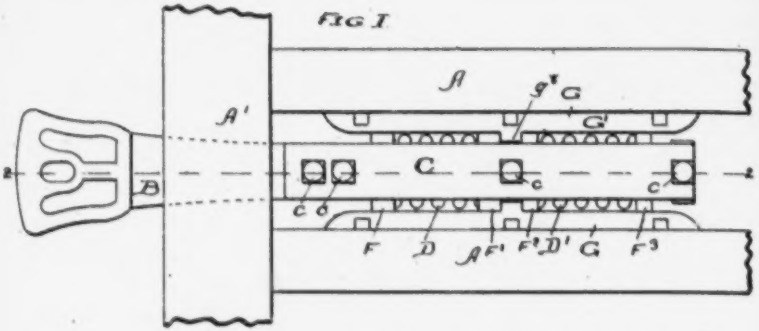

FIG 2

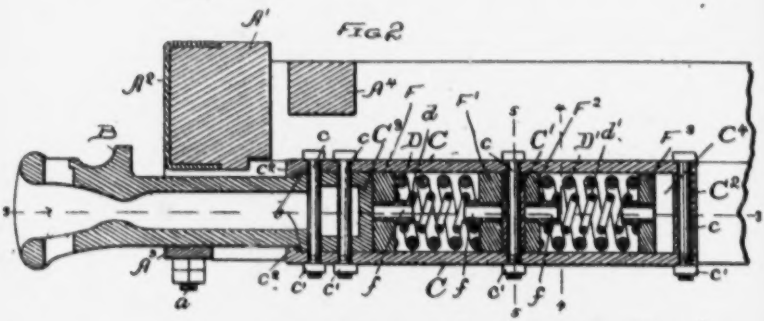

FIG. 3.

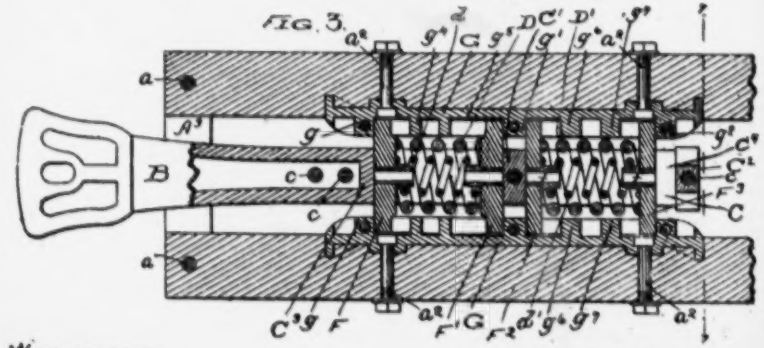

WITNESSES:
Wm. E. Curtis
H. W. Mundy

INVENTOR:
WILLIAM H. MINER

X

BY Mundy, Earle & Adcock.
HIS ATTORNEYS.

(No Model.) 2 Sheets—Sheet 2.

W. H. MINER.

DRAFT RIGGING FOR CARS.

No. 570,038. Patented Oct. 27, 1896.

FIG. 4

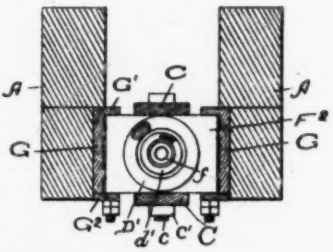

FIG. 5

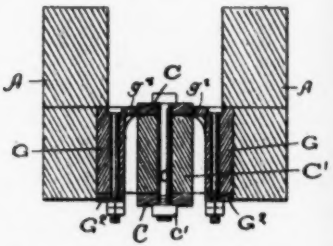

570
Springtown Co
&
Nat Mal Cast
Co
P
300

FIG 7

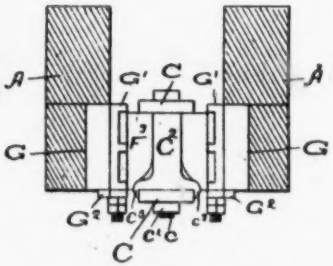

FIG 6

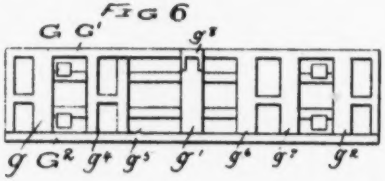

WITNESSES:
Scio. C. Curtis
H. W. Munday

INVENTOR:
WILLIAM H. MINER
BY Munday, Evarts & Adcock.
HIS ATTORNEYS.

UNITED STATES PATENT OFFICE.

WILLIAM H. MINER, OF CHICAGO, ILLINOIS.

DRAFT-RIGGING FOR CARS.

SPECIFICATION forming part of Letters Patent No. 570,088, dated October 27, 1896.

Application filed March 2, 1896. Serial No. 581,513. (No model.)

To all whom it may concern:

Be it known that I, WILLIAM H. MINER, a citizen of the United States, residing in Chicago, in the county of Cook and State of Illinois, have invented a new and useful Improvement in Draft-Rigging for Cars, of which the following is a specification.

My invention relates to improvements in draft-rigging for railway-cars.

The object of my invention is to provide a double or tandem spring draft-rigging which, while having the full yielding support or resistance of both springs under both pulling and buffing strains, will at the same time enable the two springs to come into operation successively under pulling strains in order to facilitate the starting of the train. Where the two tandem springs are arranged to come into operation simultaneously in the pulling action as well as in the buffing action, the combined resistance or stiffness of the two springs is such as to render the starting of the train more or less difficult, causing the locomotive to act at a disadvantage or like as under a dead-load. By my present improvement in the initial or starting movement of the train the draw-bars of each car have a limited movement against one only of the tandem springs, and then the other comes into operation, thus enabling the locomotive to start the cars of the train more or less successively and to make one revolution of the drivers, or a partial revolution thereof, before encountering the full load of the whole train.

Another feature of my improvement consists in adding supplemental stops to the draw-bar castings or side plates, which serve to arrest the movement of the followers just before the springs are compressed solid. This prevents the springs being compressed absolutely solid and the consequent danger of breaking the springs, which might otherwise sometimes occur even in a tandem spring draft-rigging where the train is subjected to enormous shocks, as, for example, in a collision or wreck.

In the accompanying drawings, which form a part of this specification, and in which similar letters of reference indicate like parts throughout the several views, Figure 1 is a plan view of a draft-rigging embodying my invention. Fig. 2 is a central vertical longitudinal section on the line 2 2 of Fig. 1. Fig. 3 is a horizontal section on line 3 3 of Fig. 2. Figs. 4 and 5 are cross-sections on lines 4 4 and 5 5, respectively, of Fig. 2. Fig. 6 is a detail side elevation of one of the draw-bar stop-castings, and Fig. 7 is a section on line 7 7 of Fig. 3.

In the drawings, A A are the draw-bar timbers, to which the stop-casting or side plates of the draft-rigging are attached. A' is the end sill of the car-body; A^2, the buffer-plate, A^3, the carrier-iron, secured to the draft-timbers by the bolts a, and A^4 is the sub end sill of the car-body; B, the draw-bar, and C the draw-bar extension, the same being preferably in the form of separate upper and lower pocket-straps or extension-plates adapted to fit above and below the followers, instead of in the form of a single stem or rod extending centrally through the followers. All these parts may be of any known or suitable construction.

The pocket-straps or extension-plates C C are secured to the rear end of the draw-bar by threaded bolts c c, having nuts c' c' in connection with the shoulders b b on the draw-bar and the corresponding shoulders or flanges c^2 c^2 on the pocket-straps or extension-plates.

C' C^2 are abutment blocks or thimbles secured to the draw-bar extension C C by bolts c c, having nuts c' c'. The inner end C^2 of the draw-bar serves as the other abutment-block for the followers of the two tandem springs.

D and D' are two tandem-arranged springs, and d d' are two smaller tandem springs inside the larger ones, which are sometimes preferably employed. Instead of making the springs of equal length I prefer to make the spring D' slightly longer than the spring D. Ordinarily I make the spring D seven inches in length and the spring D' eight inches in length, the compressive extent of each of the springs being two inches, although of course the springs may be of any dimensions desired. One of the two tandem springs has a limited clearance or play-space. C' between its rear follower and its rear abutment on the draw-bar

extension, so that in the pulling action the draw-bar may have a limited movement against the resistance of only one of the two tandem springs before the other comes into action. This clearance or play C^1 is preferably left between the rear follower F^3 and the rear abutment C^2, so that the rear spring will be the one to come last into action under pulling strains.

The four followers F F' F^3 F^4 are preferably rectangular blocks or plates fitting between the draw-bar extension-plates C C, there being one pair of followers for each of the two tandem springs D D'. Each of the followers F is provided with a short thimble or lug *f*, which fits inside the springs to center or hold the springs in position.

G G are the two draw-bar stop-castings or side plates secured to the inner faces of the draft-timbers A A by bolts a^3. Each of these stop-castings is provided with an upper integral guide-flange G' and a lower removable guide-plate G^2, between which the followers reciprocate and by which the followers are guided and supported. Each side plate G is further provided with three stops *g g' g²*, preferably formed integrally therewith and against which the followers F F' F^3 F^4 abut, the middle stops *g' g'* serving for the two middle followers F' F^4. If the two tandem springs D D' are made the one longer than the other, the space between the stops *g g'* and between the stops *g' g²* will be made correspondingly the one greater than the other; otherwise the two spaces may be made equal. To prevent the springs being compressed solid under either pulling or buffing strains, I provide each of the stop-castings or side plates G G with supplemental stops g^4 g^5 g^6 g^7, so arranged as to arrest the movement of the followers just before the springs are compressed. In practice, for example, where the extent of compression is two inches I usually arrange these supplemental stops so as to allow a movement of the followers of an inch and seven-eighths, so that the springs will thus lack one-eighth of an inch of being compressed solid. To prevent the rear abutment-block C^2 from turning, I ordinarily provide it with lugs c^6 to fit astride of the draw-bar extension-plate C, as the rear follower does not normally abut directly against this abutment-block, owing to the clearance or space C^1.

As the clearance or space C^1 is only left between the rear follower of one spring and the rear abutment which bears against such rear follower, it will be readily understood that both the tandem springs D D' will come simultaneously into action and be simultaneously compressed under bunting strains, while they will come successively into action and then be simultaneously compressed under pulling strains.

The feature of my invention consisting in providing the draft-rigging with supplemental stops to prevent the spring or springs being compressed solid is not limited to the use of these supplemental stops in connection with both of the tandem springs, as it will be obvious that these supplemental stops may be used with one of the two tandem springs and not with the other, and also that this feature may be employed in a single-spring draft-rigging.

It should also be observed that the feature of my invention relating to the successive coming into action of the tandem springs under pulling strains may be employed where a greater number of springs than two are arranged tandem, or one behind the other.

The upper guide-flange G' G' of the draw-bar stop-castings G G are each provided at or near their middle with guide-lugs or projections g^8 g^8, which fit against the edges of the upper draw-bar extension-plate C and thus serve as a guide to keep the draw-bar and its extensions centrally in position, while at the same time permitting the draw-bar and its extension-plates to have the necessary lateral play, as required in rounding curves in the railway-track.

It will be understood from Fig. 1 that the draw-bar and its extension may vibrate laterally to a limited extent on these guide-lugs g^8 g^8 as a pivot.

I claim—

1. In a double or tandem spring draft-rigging, the combination with a draw-bar and its extension and abutments to bear against the followers, of two tandem-arranged springs, a pair of followers for each of said springs, stops secured to the draft-timbers for the followers to abut against, there being a limited clearance or play space between the rear follower of one of said springs and the abutment bearing against said follower to cause the two springs to come successively into action under pulling strains, substantially as specified.

2. In a tandem spring draft-rigging, the combination with the draft-timbers, of the draw-bar stop-castings or side plates secured to the inner faces of said timbers, and provided each with three stops for the followers to abut against, of two tandem-arranged springs, four followers, one pair for each of said springs, and a draw-bar and its extension provided with abutments to bear against said followers, said abutments being spaced relative to the length of said springs substantially as described, so as to cause the two springs to come simultaneously into action and be simultaneously compressed under buffing strains, and to come successively into action and then be simultaneously compressed under pulling strains, substantially as specified.

3. In a draft-rigging, the combination with a draw-bar, its extension and abutment, four followers, stops for the followers to abut

COPY BOUN

against and two tandem-arranged springs coming simultaneously into action under buffing strains and successively into action under pulling strains, substantially as specified.

4. The draw-bar stop-casting or side [illegible] G having integral upper guide-flange G^1 and guide G^3, and provided with integral stops $g\ g'\ g^3$, and integral supplemental stops $g^4\ g^1\ g^5\ g^6$, substantially as specified.

WILLIAM H. MINER.

Witnesses:
S. E. CURTIS,
H. M. MUNDAY.

Here follow diagram marked p. 306

308, 310 + 312)

X

ND CLOSE IN CENTER

No. 616,965. Patented Jan. 3, 1899.

J. A. PILCHER.

DRAFT RIGGING.

(Application filed Apr. 7, 1898.)

(No Model.) 4 Sheets—Sheet 1.

Fig. 1.

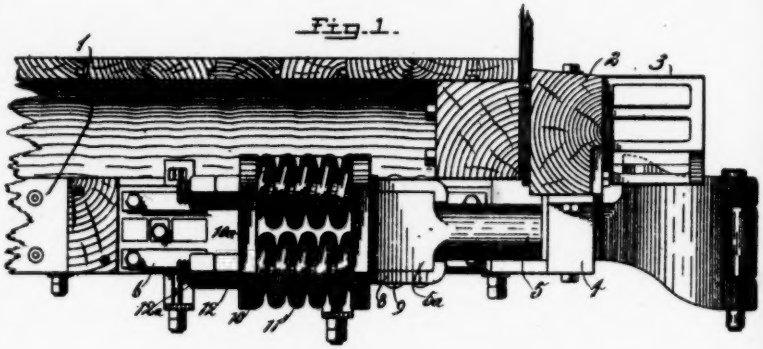

Fig. 2.

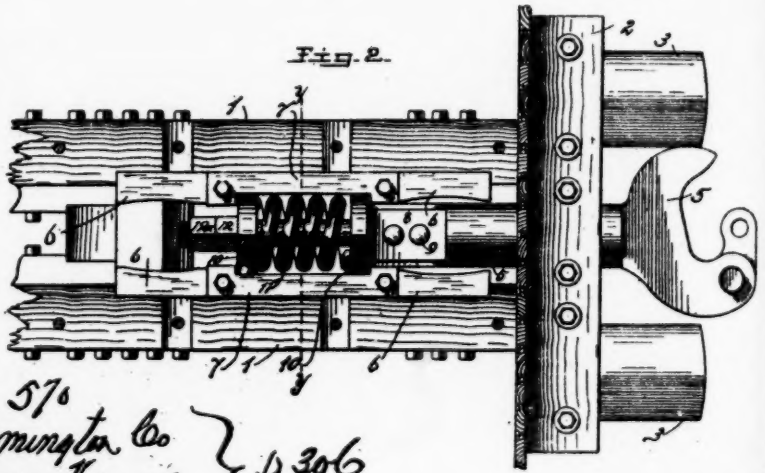

576

Symington Co
v
Nat Mal Cast Co } p 306

WITNESSES

F. W. Rittenour

Henry T. Bright

INVENTOR

John A. Pilcher

by P. W. Gillis

his Attorney

No. 616,965. Patented Jan. 3, 1899.

J. A. PILCHER.

DRAFT RIGGING.

(Application filed Apr. 7, 1898.)

(No Model.) 4 Sheets—Sheet 2.

Fig. 3.

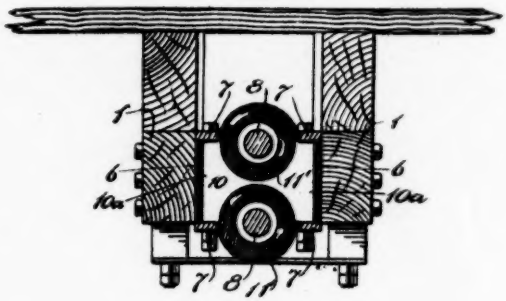

Fig. 4.

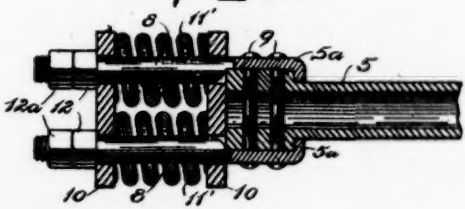

570

Symington Co
v
Nat Mal Cast Co
} 208

Fig. 5.

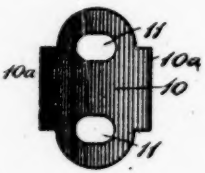

WITNESSES

F. H. Patterson

Henry T. Bright

X

INVENTOR

John A. Pilcher.

By A. Willis

his Attorney

570
Symington Co
v
Nat Mal Cast Co } $ 310

No. 616,965. Patented Jan. 3, 1899.

J. A. PILCHER.

DRAFT RIGGING.

Application filed Apr. 7, 1898.

(No Model.) 4 Sheets—Sheet 3.

Fig. 6.

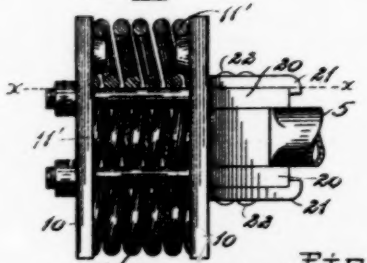

Fig. 7.

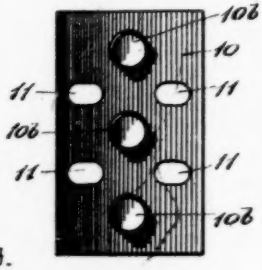

Fig. 8.

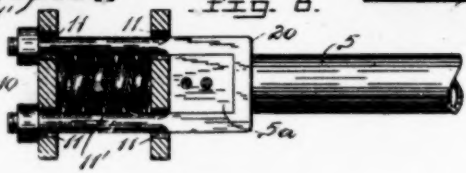

Fig. 9.

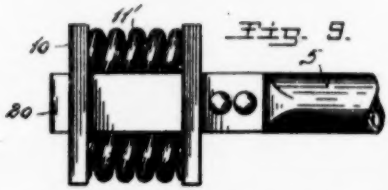

Fig. 10.

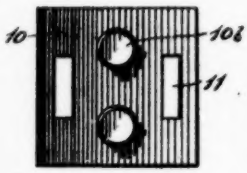

Fig. 11.

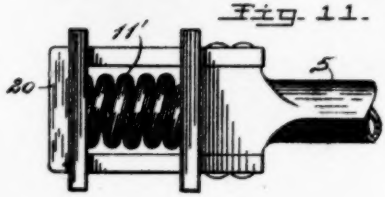

WITNESSES

Henry T. Bright

INVENTOR

John A. Pilcher.

by P. W. Gillis

his Attorney

No. 616,965. Patented Jan. 3, 1899.

J. A. PILCHER.

DRAFT RIGGING.

(Application filed Apr. 7, 1898.)

(No Model.) 4 Sheets—Sheet 4.

Fig. 12.

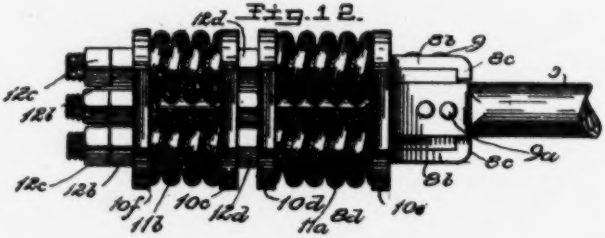

Fig. 13.

No 570
Symington Co
v
Nat Mill Cover
Co
p 312

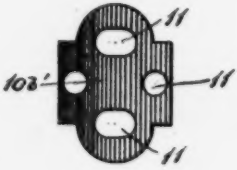

Fig. 14.

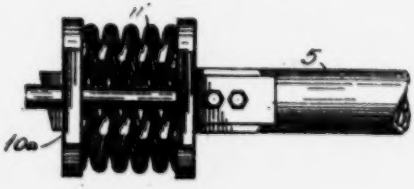

Fig. 15.

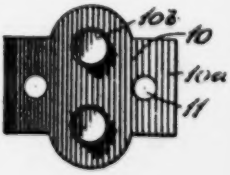

WITNESSES

F. H. Rittenour

Henry T. Bright

X

INVENTOR

John A. Pilcher

by [signature]

Atty Attorney

UNITED STATES PATENT OFFICE.

JOHN A. PILCHER, OF ROANOKE, VIRGINIA, ASSIGNOR TO THE MISSOURI RAILWAY EQUIPMENT COMPANY, OF ST. LOUIS, MISSOURI.

DRAFT-RIGGING.

SPECIFICATION forming part of Letters Patent No. 616,965, dated January 3, 1899.

Application filed April 7, 1898. Serial No. 676,787. (No model.)

To all whom it may concern:

Be it known that I, JOHN A. PILCHER, a citizen of the United States, residing at Roanoke, in the county of Roanoke and State of Virginia, have invented certain new and useful improvements in Draft-Rigging; and I do hereby declare the following to be a full, clear, and exact description of the invention, such as will enable others skilled in the art to which it appertains to make and use the same.

My invention relates to draft-rigging such as is used on railroad-cars; and the object thereof is to provide an improved form of this rigging which may be readily applied to any of the present cars, may be used in connection with the usual type of draw-head (commonly known as the "Master Car-Builders'" type) and with the usual draw-bar stops, and which will permit an increase in the spring force of the resistance both for buffing and draft.

My invention consists in the usual form of draw-bar, having certain novel arrangements of the spring-rigging attached thereto, as well as certain novel features of construction, combinations, and arrangements of parts hereinafter fully described, illustrated in the accompanying drawings, and specifically pointed out in the claims hereunto appended.

In the accompanying drawings like characters of reference indicate the same parts in the several views.

Figure 1 is a side elevation of my improved device in its preferred form and also shows a section through the floor of the car, one of the draft-timbers and the draw-bar stops attached thereto having been removed. Fig. 2 is a plan view of the draft-timbers and draft-rigging. Fig. 3 is a section of the same on the line Y Y. Fig. 4 is a detail vertical sectional view taken on the longitudinal median line of Fig. 2. Fig. 5 is a detail of one of the draw-bar follower-plates. Fig. 6 is a side elevation, partially in section, of the form of my invention in which three springs are superimposed. Fig. 7 is a view of the follower-plate used therewith. Fig. 8 is a sectional view of the same arrangement on the line X X of Fig. 6. Fig. 9 is a side elevation of the form in which a flat yoke-strap is used. Fig. 10 shows the follower-plate used therewith. Fig. 11 is a plan view thereof. Fig. 12 is a view showing a modification of my device for use with four springs. Fig. 13 is a view of the follower-plate used therewith. Figs. 14 and 15 are modified forms of the first-illustrated device.

For the purpose of illustrating the applicability of my device to cars as at present constructed I have shown in these drawings an arrangement of the draw-timbers, draw-bar stops, guides, and carrier-irons conforming to the standard adopted by the Master Car-Builders' Association. It will be observed that in this arrangement the draw-timbers are situated in such proximity that it is impossible to place two or more springs between them unless said springs are disposed vertically one above another. I am aware that springs have been thus arranged by others; but to the best of my knowledge I am not aware that the same has ever been accomplished without a change either to the shape of the tail end of the draw-bar or in some of the other parts of the draw-gear, and I am not aware that in any such vertical disposition of the springs the same have been used both to withstand the actions of buffing and draft.

The numerals 1 indicate the draw-timbers of the car, which are united with the rest of the frame in the usual manner. Numeral 2 indicates the buffing-block, and to this are attached the usual buffers 3. A draw-bar carrier-iron 4 is bolted or otherwise secured to the under side of this buffer-block. A draw-bar 5 is held to move in said carrier-iron. In the form shown in Fig. 1 lugs 5ª are provided upon the tail end of said draw-bar, this being the common method of arranging this part. Bolted or otherwise secured to the draw-timbers 1 are draw-bar stops 6. Draw-bar guides 7 are attached in the usual manner to said draw-bar stops 6.

In the preferred form of my device I attach to the draw-bar 5 tail-bolts 8, which are secured thereto by bolts 9, passing through the usual openings in the tail end of the draw-bar 5. It is obvious that these bolts may be secured to the draw-bar by bolting them through from side to side, as is illustrated in Fig. 14. It is also obvious that in the place

of the pair of bolts arranged as in Fig. 1 I may use a yoke, as shown. Draw-bar follower-plates 10, having openings 11 therein, preferably elongated laterally, as shown in Fig. 5, are held upon the projecting ends of the tail-bolts 8 and are free to slide thereon. Lugs 10^a, formed upon these plates, project between the draw-bar guides 7 and are thereby held to move within said guides, their motion being limited by the draw-bar stops 6. Between the follower-plates 10 are springs 11', arranged one above the other in a vertical series. Nuts 12, held on the other end of the tail-bolts 8, serve to hold the rear follower-plate upon said bolts, thus limiting its motion in one direction and leaving it free to move in the other direction along said bolts. In the same manner the motion of the forward follower-plate is limited by the tail end of the draw-bar in one direction, but it is free to move relative to the tail-bolts in the opposite direction. The draw-bar stops 6 limit the motion of these plates relative to the draw-timbers. It is now plain that if a pull be exerted upon the draw-head the rear follower-plate 10 will be moved forward by the tail-bolts 8, but the front follower-plate will be held from moving by the front draw-bar stops 6, and the tail-bolts will be drawn through the openings in the front follower-plate, thus bringing said plates closer together and compressing the springs therebetween. In buffing the rear follower-plate is held stationary by the rear draw-bar stops, the front follower-plate is moved toward it, and the spring compressed, as in the previous case. By this means I obtain the usual compression of the springs as well from buffing as from draft. In order to retain the nuts 12 upon the tail-bolts 8, I use some one of the many well-known nut locking devices, and I have herewith the common form of locking-nut 12^a, although it is obvious that any other form would be of equal advantage.

When the yoke 8^b is used either in vertical arrangement (in which case the springs are usually held around the side bars of the yoke) or in horizontal arrangement, as shown in Fig. 2, it is obvious that the back of the yoke will act, as do the nuts 12, upon the tail-bolts. When either the tail-bolts 8 or the yoke 8^b are used in horizontal arrangement, I form upon the follower-plates spring-lugs 10^b, and I also use these when more than two springs are to be applied in vertical arrangement.

Figs. 6, 7, and 8 show views of my device wherein three springs in vertical series are used. The numeral 20 shows a U-shaped yoke-strap extending around the lugs of the tail end of the draw-head. Cover-plates 21, held in place by bolts 22, serve to hold said yoke-strap in position. The rest of this modified arrangement is practically identical with that hereinbefore described, and the same reference-numerals are therefore used.

In Figs. 9, 10, and 11 a yoke-strap is also used; but in this instance the yoke-strap is bolted through from side to side of the tail end of the draw-head.

In Figs. 14 and 15 still another modification of my device is shown. It is not deemed necessary to enter into detail description of these last modifications, since the construction is perfectly obvious from the views shown.

Figs. 12 and 13 show the manner in which my device may be used with the springs in horizontal as well as vertical series. The draw-bar 5 is of the same form as in the previous figure. Tail-bolts 8^b, having downwardly-bent ends 8^c, are securely fastened to said draw-bar by means of the ordinary bolts 9, the downwardly-bent ends of the tail-bolts engaging the front ends of the lugs upon the draw-bar. Tail-bolts 8^d, having flattened ends thereon, are held in position by bolts 9^a passing through the draw-head from side to side. Upon the tail-bolts are carried follower-plates 10^c, 10^e, 10^d, and 10^e. Springs 11^a and 11^b are held upon the tail-bolts 8^b and have an intermediate threaded portion. Nuts 12^b, with lock-nuts 12^c, serve to hold the follower-plates upon said tail-bolts. Nuts 12^d, held upon the intermediate threaded portion of the tail-bolts, serve to keep the follower-plates 10^e and 10^d separated. The form of guide that is used with this device is provided with the usual center stop between the follower-plates 10^c and 10^e. In the operation of this device when the cars are coupled the rear draw-bar stop will prevent the plate 10^c moving. The draw-head 5 being pushed backward will carry therewith the plate 10^e, and the nuts on the tail-bolts will move in the same direction, plate 10^c thus compressing the springs 11^a and 11^b. When draft is exerted, the reverse action takes place, the follower-plates 10^d and 10^e being held stationary and the follower-plates 10^c and 10^e being moved.

It is obvious that the springs may be arranged singly, as here shown for the sake of clearness, or may be arranged in nests in the usual way. It is also plain that beside the variants shown herewith many others, all embodying the same general principles, may be devised by any person having ordinary mechanical skill. I do not therefore desire to confine myself to nor limit myself by these forms that I have herein shown and described, but I desire to include all forms having the same general principles that exist in all this.

I have thus provided a simple construction to accomplish the purpose specified, which embraces in itself the essential features of applicability to existing cars, minimum of expense, and maximum of spring-power.

Having thus described my invention, what I claim as new, and desire to secure by Letters Patent, is—

1. In a car, draw-beams, a draw-head suspended between said draw-beams having lugs formed vertically upon the tail end thereof, a pair of tail-bolts, having downwardly-bent ends engaging said lugs, extending rear-

wardly from said draw-head, means for securing said tail-bolts to said draw-head, follower-plates held upon said tail-bolts, springs in a vertical series held between said follower-plates and draw-stops attached to said draw-beams to limit the motion of said follower-plates whereby said springs are compressed both during buffing and draft.

2. In a car, draw-beams, a draw-head suspended between said draw-beams, tail-bolts attached to said draw-head and extending rearwardly therefrom, follower-plates held upon said tail-bolts, springs in a plurality of vertical series held between said follower-plates, stops held upon said tail-bolts between each series of said springs and their accompanying follower-plates to limit the motion of the latter, and draw-stops held upon said draw-beams to limit the motion of the follower-plates and cause all of said springs to be compressed both during buffing and draft.

In testimony whereof I affix my signature in presence of two witnesses.

JNO. A. PILCHER.

Witnesses:
R. H. PERSINGER,
T. E. GRAHN.

x(Here follow diagram marked p. 318

(315 1320)
X

No. 693,643.

Patented Feb. 18, 1902

W. H. EMERICK.

DRAFT RIGGING FOR CARS.

(Application filed May 24, 1901.)

(No Model.)

2 Sheets—Sheet

570
Syming Co Co
v
Nat Mal Cast Co
318

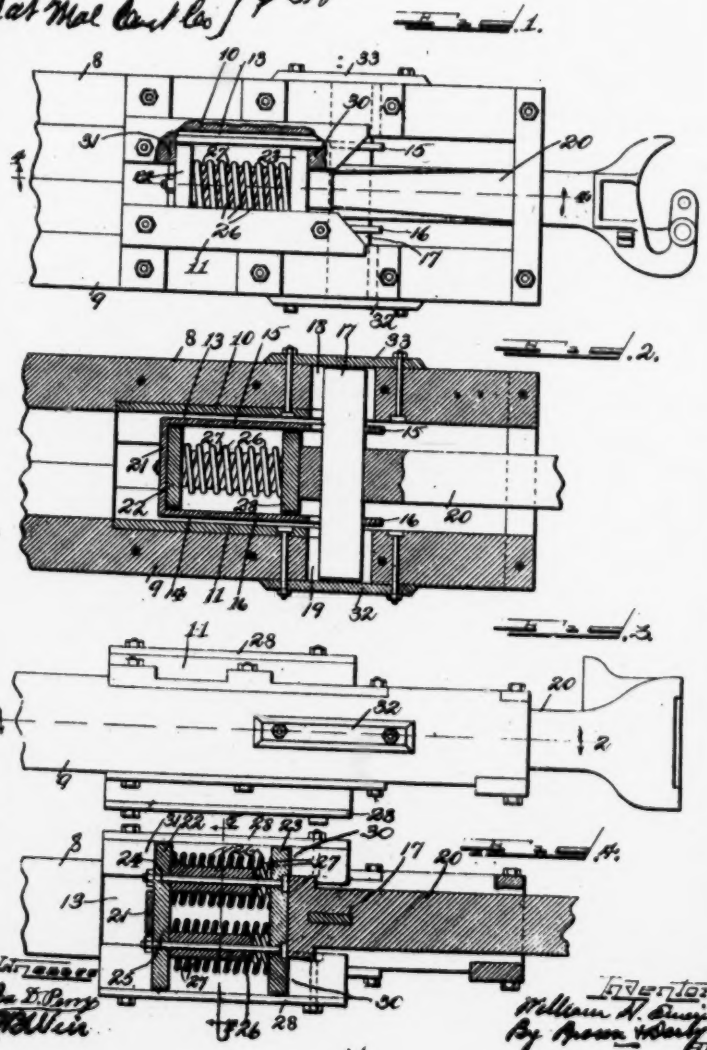

X

No. 693,643. Patented Feb. 18, 1902.

W. H. EMERICK.

DRAFT RIGGING FOR CARS.

(Application filed May 24, 1901.)

(No Model.) 2 Sheets—Sheet 2.

670
Symington Co
v
Nat Mal Cast Co } ϕ 340

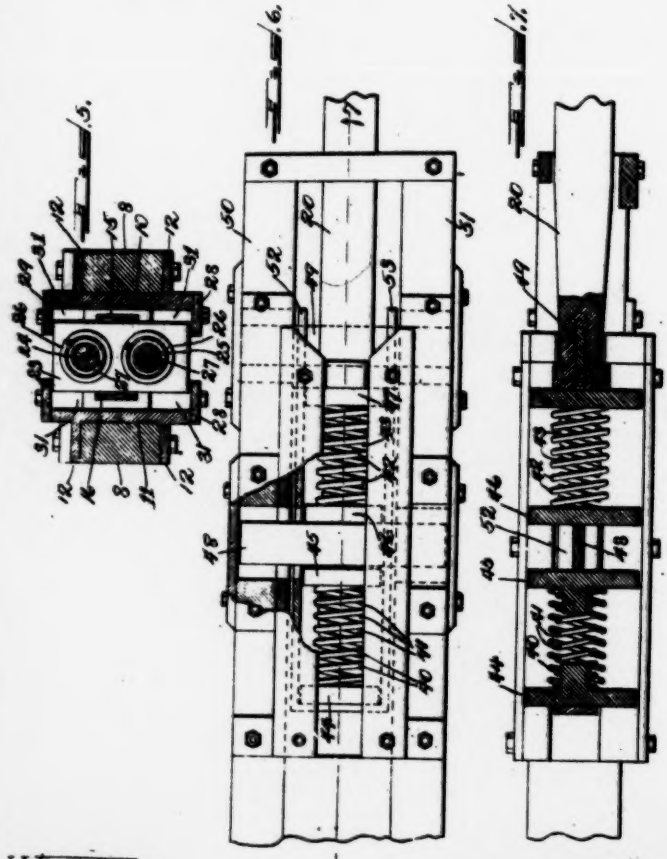

UNITED STATES PATENT OFFICE.

WILLIAM H. EMERICK, OF CHICAGO, ILLINOIS.

DRAFT-RIGGING FOR CARS.

SPECIFICATION forming part of Letters Patent No. 693,643, dated February 18, 1902.

Application filed May 24, 1901. Serial No. 61,678. (No model.)

To all whom it may concern:

Be it known that I, WILLIAM H. EMERICK, a citizen of the United States, residing at Chicago, in the county of Cook and State of Illinois, have invented a new and useful Draft-Rigging for Cars, of which the following is a specification.

This invention relates to draft-rigging for cars.

The object of the invention is to provide a construction of draft-rigging for cars which is simple and efficient and wherein renewal of the coupling bar or arm in case of breakage may be effected easily and readily.

Other objects of the invention will appear more fully hereinafter.

The invention consists substantially in the construction, combination, location, and arrangement of parts, all as will be more fully hereinafter set forth, as shown in the accompanying drawings, and finally pointed out in the appended claims.

Referring to the accompanying drawings, and to the various views and reference-signs appearing thereon, Figure 1 is a top plan view of a draft-rigging constructed in accordance with the principles of my invention, parts being broken out and in section. Fig. 2 is a horizontal longitudinal section of the same on the line 2 2 of Fig. 3 looking in the direction of the arrows. Fig. 3 is a view in side elevation. Fig. 4 is a view in vertical longitudinal section on the line 4 4, Fig. 1, looking in the direction of the arrows. Fig. 5 is a transverse section on the line 5 5 of Fig. 4 looking in the direction of the arrows. Fig. 6 is a view similar to Fig. 1, showing a slightly-modified arrangement of parts embraced within the spirit and scope of my invention. Fig. 7 is a view in vertical longitudinal section on the line 7 7 of Fig. 6.

In the practical operation of cars the coupler arm or bar by which one car is attached at its end to the next adjacent car is subjected to heavy usage by reason of the pull exerted thereon when the cars are coupled up and by reason of the impact thereon during the coupling operation. By reason of this heavy usage breakage of the coupler arm or bar frequently occurs. In prior constructions of draft-rigging for cars embodying means of attachment of the coupler-arm to the car-body it has been necessary in making repairs or replacements of the coupler arm or bar to remove the draft-rigging from the supporting-sills. This consumes time and involves the taking apart and replacement of the parts of the draft-rigging, which is a practical objection the present invention is particularly designed to overcome, and in accordance with the principles of my invention I provide a construction of draft-rigging which is exceedingly simple and efficient and wherein the coupling arm or bar may be readily removed and replaced in case of breakage without the necessity of removing, taking apart, or replacing the draft-rigging.

In the drawings I have shown various constructions and arrangements of draft-rigging embodying the principles of my invention.

Referring to Fig. 1, reference-signs 8 and 9 designate the side sills constituting the framework upon which the draft-rigging is supported and to which the rigging is connected, said sills being bolted or otherwise connected to the car-body in the ordinary manner.

Reference-signs 10 and 11 designate counterpart castings respectively mounted upon the rigging-sills 8 9. Said castings are provided with flanges 12, arranged to receive the sills 8 9 therebetween to afford efficient means for clamping or bolting said castings to said sills, said castings being mounted upon the opposed inner faces or sides of the sills 8 9, respectively. On the inner opposed faces of castings 10 11 are formed coöperating guideways 13 14, each adapted to receive a leg 15 16 of a U-shaped belt or strap, which constitutes the draft-strap. The outer ends of the legs 15 16 are slotted to receive therethrough a key or pin 17. The sills 8 and 9 are also correspondingly slotted in alinement with each other and with the free ends of the legs 15 16, the ends of the key or pin 17 extending into the slots 18 19 in said sills, as clearly shown in Fig. 2.

Reference-sign 20 designates the coupler arm or bar, which may be of the usual or ordinary construction and having a transverse slot or opening therethrough, as shown in Figs. 2 and 4, to receive therethrough the pin or key 17. In this manner the coupler-arm may be detachably connected to the ends or legs 15 16 of the draft yoke or strap. The

slots 18 19 in the sills 8 9 should be of sufficient size or area to afford clearance for lateral movements of the key 17 under the exigencies of the impact or draft imposed thereon in coupling or in hauling a car. Interposed between the end of coupler-arm 20 and the connecting web portion 21 of the draft-yoke is a suitably-arranged spring, which may be of the ordinary construction and arrangement, such as is usually employed in draft-riggings for the purpose of relieving the shock and jar of the pulls or impact imposed upon the coupler arm or bar in use.

I have shown in Figs. 1, 2, 3, and 4 a simple arrangement of spring or spring-buffer comprising end plates 22 23, suitably connected together by rods 24 25, upon which said plates loosely slide. Upon each rod is mounted the coiled springs 26 27. All the parts of the spring-buffer mentioned constitute a connected frame arranged to be received between the castings 10 11 and held in place by the flanges 28, which flanges, if desired, may be made removable to afford access to said springs when desired. The plate 22 of the spring-buffer is arranged to take bearing against the web or connecting portion 21 of the draft-yoke, and the plate 23 of the buffer is arranged to take bearing against the inner end of the coupler arm or bar, as most clearly shown in Figs. 2 and 4.

From the foregoing description it will be seen that when a pull is exerted upon the coupler-arm the buffer-plate 23 will take bearing against the shoulders 30 of the castings 10 11, which thereby constitute a stop for said buffer-plate, and the pull exerted upon the coupler-arm 20 is transmitted through the draft-yoke and is imposed upon the buffer-plate 22, which being movable and loosely mounted upon the bolts 24 is drawn yieldingly toward the plate 23, thereby imposing a compression upon the springs 26 27. Similarly in case of an endwise impact upon the coupler-arm—as when two cars come together, for instance—the buffer-plate 22 strikes against the shoulder 31 (see Fig. 1) of the castings 10 11, and the endwise projection of coupler-arm 20 forces the buffer-plate 23 toward plate 22 and imposes a compressive tension upon the springs. In this manner the parts are relieved of shock or jar. If desired, the ends of the key or pin 17 may be retained in place and said pin or key prevented from working out of place by means of keepers 32 33.

From the foregoing description it will be seen that in case of breakage of the coupler arm or bar the same may be removed and replaced without disturbing the other parts of the draft-rigging by merely removing the keeper or the keepers 32 33 and withdrawing the locking key or pin 17, and when the new coupler arm or bar is inserted the same may be quickly locked or secured to the draft-rigging by again inserting the locking pin or key 17 in place through the openings 18 19 in the sills 8 9 and the openings in the ends of the legs 15 16 of the draft-yoke and through a transverse opening in the coupling-arm.

The construction shown in Figs. 6 and 7 differs from that above described with reference to Figs. 1, 2, 3, 4, and 5 only in the arrangement of the buffer-springs. For instance, the construction and arrangement shown in Figs. 1 to 5 and above described is known in the art as a "twin" arrangement, and the construction shown in Figs. 6 and 7 is known in the art as the "tandem" arrangement, of springs—that is, in the one case the set of springs are arranged side by side, whereas in the construction shown in Figs. 6 and 7 said springs 40 41 and 42 43 are arranged one behind and in line with the other, each set of springs being held between relatively movable buffer-plates 44 45 46 47. In the construction shown in Figs. 6 and 7, however, two locking pins or keys 48 49 are employed, the pin 49 passing transversely through the sills 50 51 and the ends 52 53 of the coupling-yoke and also through the coupler-arm 20, and the other passing transversely through slots or openings in the sills 50 51 and between the two sets of buffer-springs, said key 48 forming a stop or shoulder for buffer-plate 46, and the rear connecting-web of the yoke-strap forming a bearing for the corresponding plate 44 of the other set of springs to effect a compression of the springs under the influence of a pull exerted upon the coupler-arm, and said key 48 forming an abutment for plate 45 of the one set of springs, while the end of the coupling-arm 20 forms an abutment for the corresponding plate 47 of the other set of buffer-springs to effect the compression of said springs under the influence of an impact imposed longitudinally upon the coupler-arm. In other respects the construction in the two cases may be the same.

It is obvious that my invention is not to be limited or restricted to any particular construction or arrangement of buffer-springs, and other forms of buffer-springs may be employed in connection with my invention without departure from the spirit or scope thereof. It is also obvious that changes and variations in the details of construction and arrangement of parts would suggest themselves to persons skilled in the art and still fall within the spirit and scope of my invention. I do not desire, therefore, to be limited or restricted to the exact details shown and described; but,

Having now set forth the object and nature of my invention and constructions embodying the principles thereof, what I claim as new and useful, and desire to secure by Letters Patent, is—

1. A draft-rigging for cars comprising side sills, independent counterpart castings mounted upon the opposed sides or faces of said sills, said castings provided with shoulders and having coöperating longitudinally-extending seats or ways in the opposed faces thereof, follower-plates arranged to be re-

X

ceived between said castings and operating between said shoulders, the ends of said plates extending into and working in said seats or ways, springs interposed between said plates, a draft-yoke loosely seated between said castings and arranged to straddle said plates, a coupler-arm and a removable key for connecting said coupler-arm to said draft-yoke and sills, as and for the purpose set forth.

2. A draft-rigging for cars comprising side sills, independent counterpart castings mounted upon the opposed faces of said sills and having longitudinal ways or seats formed in the opposed faces thereof, follower-plates arranged to be loosely received between said castings and having their ends extending and working in said ways or seats, springs interposed between said follower-plates, a draft-yoke loosely mounted between said castings and arranged to straddle said plates, a coupler-arm, said coupler-arm, draft-yoke and sills being provided with registering slots or openings, and a locking-key adapted to be removably received in said openings, as and for the purpose set forth.

3. A draft-rigging for cars comprising side sills having elongated longitudinally-extending slots or openings, counterpart castings mounted on the opposed faces of said sills, a coupler-arm having an opening therethrough, a draft-yoke loosely mounted between said castings and having the sides thereof received in longitudinal seats formed in the opposed faces of said counterpart castings, a locking key or pin passing through said coupling-arm and draft-yoke and having its ends received in the elongated slots in said sills, and yielding means interposed between said draft-yoke and casting, as and for the purpose set forth.

4. A draft-rigging for cars comprising side sills, independent counterpart castings mounted thereon and provided with longitudinally-extending seats or ways on the opposed faces thereof, said castings also provided with shoulders arranged to project into said seats or ways, a draft-yoke having its sides received in the seats or ways in said castings, a coupling-arm, a removable key for locking said arm to said yoke and sills, follower-plates extending transversely between said castings and having their ends received in said seats or ways and adapted to be engaged by said yoke when moved in one direction and by said coupling-arm when moved in the other direction, and a spring-buffer mounted in said castings and between said plates, said shoulders limiting the movement of said plates, as and for the purpose set forth.

In witness whereof I have hereunto set my hand, this 22d day of May, 1901, in the presence of the subscribing witnesses.

WILLIAM H. EMERICK.

Witnesses:
C. S. DARRACH,
S. E. DARBY.

X

ND CLOSE IN CENTER

324 *Clerk's Certificate.*

UNITED STATES OF AMERICA,
District of Maine, ss:

I, James E. Hewey, Clerk of the District Court of the United States for the District of Maine within the First Circuit, hereby certify that the three (3) volumes entitled as follows:—

Volume I., Plaintiffs' Record,—Pleadings, Testimony and Exhibits;
Volume II., Defendant's Record,—Pleadings, Testimony and Exhibits;
Volume III., Proceeding in said District Court with References to Volumes I and II.;

this certificate being attached to each of said three volumes, contain and are a true copy of the record and all proceedings of said District Court in the cause in equity entitled, No. 705, The National Malleable Castings Company and Jacob J. Byers, Plaintiffs, v. The T. H. Symington Company, Defendant, in said District Court determined, the Opinion of the District Court of April 8, 1915 (dismissing Bill of Complaint), the Petition for Appeal and Assignment of Errors, Bond to Party on Appeal, Præcipe as to Appeal Record, and also the original Citation, issued upon said Petition for Appeal, with Acknowledgment of Service thereon by counsel of record.

In testimony whereof, I have hereunto set my hand and affixed the seal of said District Court, at Portland, in said District of Maine, this fourth day of September, A. D. 1915.

[SEAL.] JAMES E. HEWEY, *Clerk.*

325 United States Circuit Court of Appeals for the First Circuit.

No. 1147.

THE NATIONAL MALLEABLE CASTINGS COMPANY et al., Plaintiffs, Appellants,

v.

THE T. H. SYMINGTON COMPANY, Defendant, Appellee.

Clerk's Certificate.

I, Arthur I. Charron, Clerk of the United States Circuit Court of Appeals for the First Circuit, certify that the three volumes, entitled in the above cause, namely:—

Volume I., Plaintiffs' Record;
Volume II., Defendant's Record;
Volume III., Proceedings in District Court;

this certificate being attached to each of said three volumes, contain and are a true copy of the record in said cause in said court.

In testimony whereof, I hereunto set my hand and affix the seal of said United States Circuit Court of Appeals for the First Circuit, at Boston, in said First Circuit, this first day of July, A. D. 1916.

ARTHUR I. CHARRON, *Clerk.*

[Seal United States Circuit Court of Appeals, First Circuit.]

United States internal revenue documentary stamp, series of 1914, ten cents, canceled July 1, 1916. A. I. C.

1 Volume III.

United States Circuit Court of Appeals for the First Circuit, October Term, 1915.

No. 1147.

THE NATIONAL MALLEABLE CASTINGS COMPANY et al., Plaintiffs, Appellants,

v.

THE T. H. SYMINGTON COMPANY, Defendant, Appellee.

Appeal fom the District Court of the United States for the District of Maine, from Final Decree (Hale, J.), May 24, 1915.

Certified Copy of Record and All Proceedings in Said Cause, to and Including July 1, 1916.

2 United States Circuit Court of Appeals for the First Circuit, October Term, 1914.

No. 1147.

THE NATIONAL MALLEABLE CASTINGS COMPANY et al., Plaintiffs, Appellants,

v.

THE T. H. SYMINGTON COMPANY, Defendant, Appellee.

Volume III.

Proceedings in District Court.

3 *Transcript of Record of District Court.*

(Filed in Circuit Court of Appeals Sept. 10, 1915.)

UNITED STATES OF AMERICA,
District of Maine, ss:

At a term of the District Court of the United States of America begun and held at Portland, within and for the District of Maine, on the first Tuesday of April, to-wit, the sixth day of April, in the year of our Lord one thousand nine hundred and fifteen.

Before Honorable Clarence Hale, District Judge.

No. 705. Equity.

THE NATIONAL MALLEABLE CASTINGS COMPANY et al., Plaintiffs, Complainants,

v.

THE T. H. SYMINGTON COMPANY, Defendant.

On October 30, 1913, Fish, Richardson, Herrick & Neave, Solicitors, filed the following

Bill of Complaint.

(Filed October 30, 1913.)

(MEMORANDUM.—Original Bill of Complaint is here inserted, but is not printed in this Record, an amendment thereto being filed on April 2, 1914, and allowed by the Court on April 20, 1914, the Bill of Complaint as amended appearing in this Record, Vol. I, page 1. James E. Hewey, Clerk.)

Whereupon a Subpœna in Chancery issued returnable November 19, 1913, which was thereafterwards returned by the United States Marshal, duly executed and said cause was entered in court.

4 And on November 6, 1913, there was entered and filed the appearance of Edwin F. Samuels, Steuart & Steuart and Libby, Robinson & Ives, as solicitors for the defendant.

And on January 31, 1914, there was filed by the defendant the following

Answer.

(Filed January 31, 1914.)

(MEMORANDUM.—Answer of defendant to original Bill of Complaint is here inserted, but is not printed in this Record—Answer to an Amended Bill of Complaint being filed June 5, 1914, amended December 24, 1914, and in amended form appearing in this Record Vol. II, page 1. James E. Hewey, Clerk.)

And on February 19, 1914, there was filed by the plaintiffs the following

Petition for Leave to File Interrogatories Under Equity Rule 58.

(Filed February 19, 1914.)

The plaintiffs herein, by Fish, Richardson, Herrick & Neave, their solicitors, petition this honorable court, ex parte under equity rule 58, for an order permitting the plaintiffs to file interrogatories directed to T. H. Symington, President of the Defendant corporation.

FISH, RICHARDSON, HERRICK & NEAVE,
Solicitors for Plaintiffs.

Dated February 18, 1914.

5 *Affidavit Annexed to Petition.*

STATE OF NEW YORK,
County of New York, ss:

William G. McKnight, being first duly sworn, deposes and says: I am an attorney-at-law, and a member of the firm of Fish, Richardson, Herrick & Neave, solicitors for the plaintiffs herein, and am familiar with the proceedings in the above-entitled case.

This suit is brought for alleged infringement of Letters Patent No. 673,419, issued to Jacob J. Byers, for Improvements in Draft Rigging. I am informed and believe that the defendant, The T. H. Symington Company, is a corporation organized under the laws of the State of Maine. This suit was at issue by filing the answer therein on January 31, 1914, and therefore the time provided by equity rule 58, within which the plaintiffs may file interrogatories, expires February 21, 1914. The bill of complaint herein alleges infringement by the defendant of the claims 1, 2 and 10 of the Byers patent in suit, and cites as a particular example of infringement the making of a contract by the defendant herein whereby it agrees to furnish to the Pressed Steel Car Company draft rigging or parts thereof intended to be used in infringement of the combination defined in said claims, and by the manufacture and sale to the Pressed Steel Car Company of the parts called for by said contract. The plaintiffs herein desire to file interrogatories directed to an officer of the defendant corporation, but it has not yet been able to secure sufficient information upon which to base said interrogatories. The plaintiffs therefore request that an order be granted, permitting the filing of interrogatories directed to T. H. Symington, President of The T. H. Symington Company, the defendant herein, and permitting the filing twenty days after the entry of the order of such interrogatories as the plaintiffs are advised by counsel are necessary.

WILLIAM G. McKNIGHT.

Sworn to before me, this 20th day of February, 1914.

[SEAL.] ALAN H. MANN,
Notary Public.

6 And on said February 19, 1914, on said petition there was entered the following

Order, Hale, J.

(Filed February 19, 1914.)

On the annexed affidavit and on the application of the plaintiffs herein it is

Ordered that the plaintiffs may file interrogatories directed to T. H. Symington, President of The T. H. Symington Company, the defendant herein, and that the plaintiffs may have twenty days after the entry of this order within which to file said interrogatories.

CLARENCE HALE,
U. S. District Judge.

And on April 2, 1914, within the extended time allowed by the Court, there was filed the following

Interrogatories by Plaintiffs to T. H. Symington Under Equity Rule 58.

(Filed April 2, 1914.)

(MEMORANDUM.—Interrogatories by plaintiffs to T. H. Symington under Equity Rule 58 as printed in this Record, Vol. I, page 15, are herein inserted. James E. Hewey, Clerk.)

And on said April 2, 1914, there was filed by the plaintiffs the following

Motion to Amend Bill of Complaint.

(Filed April 2, 1914.)

And now come the plaintiffs, by their counsel, and move to amend the bill of complaint by inserting in the third line of paragraph IV, after the numeral "2", the following: 3, 5, 6, 7, 8.

Very respectfully,

CHARLES NEAVE,
Counsel for Plaintiffs.

April 20, 1914.

So ordered.
C. HALE, *U. S. Judge.*

7 And on said April 13, 1914, there was filed by the defendant the following

Motion for Costs on Filing Amended Bill of Complaint and for Enlargement of Time for Filing Answer.

(Filed April 13, 1914.)

Now comes the defendant in the above-entitled cause and shows that the plaintiffs have filed herein motion for amendment of bill of complaint; that on account of such amendment it will be necessary for the defendant in preparation of its answer to the amended bill of complaint to make further extensive investigation of facts pertaining to the allegations of said amended bill of complaint, and to review the prior art relating to the subject matter of the letters patent referred to in said amended bill of complaint.

Wherefore the defendant prays that the plaintiffs be required to pay costs to the date of allowance of such amendment and prays further that the time for filing its answer or other defence to such amended bill of complaint be enlarged.

THE T. H. SYMINGTON COMPANY,
By LIBBY, ROBINSON & IVES,
STEUART & STEUART,
Its Attorneys.

And on said April 13, 1914, there was filed by the defendant the following

Objections to Interrogatories Filed by Plaintiffs.

(Filed April 13, 1914.)

Now comes the defendant in the above-entitled cause and presents its objections to the interrogatories filed by plaintiffs herein.

Interrogatory #1 is irrelevant and immaterial to this action in that the side castings, which are the subject of inquiry, are not disclosed in the patent in suit or included in the claims of that patent, so that the question relates to a portion of the defendant's business in regard to which the plaintiffs have in no way established or attempted to establish their right to inquire.

8 The defendant objects to the 3rd interrogatory because the features of the structure of the blue print referred to are not found in the patent in suit, and the plaintiff is therefore not privileged to inquire as to whether they are in defendant's structure.

Interrogatory #4 is objectionable because the draft castings A on the blue print, referred to as side castings, are not disclosed in the Byers' patent 673,419 in suit, nor are any parts which could be so termed, referred to, or disclosed in that patent.

Objection is made to interrogatory #5 on the ground that the correspondence referred to, if it is in existence, contains information immaterial to the question of infringement of the patent in suit, which is the only point in regard to which the plaintiffs may, at this time, inquire, and there is no apparent relation between this correspondence and the question of infringement of plaintiff's patent by the defendant.

The objections made to interrogatories #1 and #4 also apply to interrogatory #6.

The defendant objects to interrogatories #7 and #8 in that these questions relate to a device radically different from that of the patent in suit.

Interrogatory #9 is a hypothetical question relating to a supposed agreement between the defendant and a stranger to this case, which can have no bearing on the question as to whether the defendant is infringing the patent in suit.

EDWIN F. SAMUELS,
Solicitor for Defendant.

STEUART & STEUART,
Of Counsel for Defendant.

And on April 17, 1914, there was filed by the defendant the following

Amendment to Objections to Interrogatories Filed by Plaintiffs.

(Filed April 17, 1914.)

Now comes the defendant in the above-entitled cause and prays leave to amend its objections to the interrogatories by adding the following:

In that questions 1, 2 and 6 are alternative in form and
9 therefore indefinite, and all the questions relate to an executory contract.

EDWIN F. SAMUELS.
Solicitor for Defendant.

STEUART & STEUART,
Of Counsel.

And on April 20, 1914, plaintiffs' motion to amend Bill of Complaint, filed April 2, 1914, was by the Court allowed—costs to await result of final hearing—defendant's motion filed April 10, 1914, may then be renewed.

(MEMORANDUM.—Bill of Complaint as amended appears in this Record, Vol. I, page 1. James E. Hewey, Clerk.)

Defendant's time for filing Answer to Bill of Complaint as amended, enlarged to include May 20, 1914.

And on said April 20, 1914, on plaintiffs' interrogatories under Rule 58, filed April 2, 1914 and objections thereto filed April 13, 1914, and amendment to said objections filed April 17, 1914, upon hearing had, the Hon. Clarence Hale, District Judge, sitting, there was entered the following

Order, Hale, J.

Defendant's objections to interrogatories are overruled except as to objections relating to interrogatories number 5 and 9—Interrogatory No. 9 need not be answered—Interrogatory No. 5 is to be answered but only in regard to matters relating to specifications and blue prints bearing upon the form of structure that the Pressed Steel Car Company desired to have manufactured by defendant.

And on May 11, 1914, within the extended time allowed by the Court, there was filed by the defendant the following

Defendant's Answers to Plaintiffs' Interrogatories.

(Filed May 11, 1914.)

(MEMORANDUM.—Defendant's answers to plaintiffs' interrogatories to T. H. Symington under Equity Rule 58, as printed in this Record Vol. I, page 15 and Vol. II, page 6, are here inserted. James E. Hewey, Clerk.)

And on June 5, 1914, within the extended time allowed by the Court, there was filed by the defendant the following

Answer to Amended Bill of Complaint.

(Filed June 5, 1914.)

(MEMORANDUM.—Defendant's answer to Amended Bill of Complaint is here inserted but is not printed in this Record, being further amended on December 24, 1914, and as amended appearing in this Record Vol. II, page 1.)

And on June 29, 1914, there was filed by the defendant the following

Petition as to Taking Testimony.

(Filed June 29, 1914.)

To the Honorable Judges of the District Court of the United States for the District of Maine:

This petition of the defendant in the above entitled cause respectfully represents that this is a suit in equity for the infringement

of Letters Patent of the United States and that the cause is duly at issue.

That it is necessary for the defendant to take the testi-
11 mony of witnesses residing more than one hundred miles from the seat of trial and that the defendant desires to take the said testimony under Section 863 of the Revised Statutes of the United States and in accordance with Rule 47 of the Rules of Practice, which provides that the consent of the Court shall be obtained before testimony is taken under these circumstances.

Wherefore, the defendant prays that it may have the permission called for under the said Rule 47, in order that it may proceed to take testimony pursuant to the said section 863 of the said Statute.

LIBBY, ROBINSON & IVES,
EDWIN F. SAMUELS,
Solicitors for Defendant.

upon which petition, on June 29, 1914, there was entered (Hale, J.) the following

Order as to Proof.

(Entered June 29, 1914.)

It is Ordered upon application of the defendant that it shall have the right to take the depositions of the witnesses whose names are to be furnished and who are to be examined, before any notary public and upon the usual notice, all as prescribed by Revised Statutes Sec. 863, or upon such other notice as may be mutually agreed upon by counsel for both parties.

And it is further provided that the depositions of the said witnesses who reside more than one hundred miles from the place of trial, may be taken by depositions instead of oral testimony in open court.

It is also further provided that the defendant shall have for the taking and filing of its depositions in chief, sixty days from the first day of July, 1914, and that both parties shall still have the right to produce witnesses and have them heard in open court at the time of trial.

CLARENCE HALE,
District Judge.

12 And on August 4, 1914, there was entered (Hale, J.) the following

Order as to Proof.

(Entered August 4, 1914.)

Motion having been filed in the above entitled cause for enlargement of the time within which defendant may file affidavits as to the testimony in chief of expert witnesses whose testimony is

directed to matters of opinion, it is ordered that the time within which defendant may file such affidavits be extended to September 1, 1914.

CLARENCE HALE,
District Judge.

Dated August 4, 1914.

And on September 4, 1914, there was entered (Hale, J.) the following

Order as to Proof.

(Entered September 4, 1914.)

It is hereby ordered that the defendant be permitted to file an expert affidavit under rule 48, provided the affidavit be served upon counsel for plaintiffs on or before September 15, 1914, and the affiant be produced in court at the trial of the case for cross-examination.

CLARENCE HALE,
District Judge.

And on November 9, 1914, there was entered (Hale, J.) the following

Order as to Proof.

(Entered November 9, 1914.)

It is hereby ordered that the time for taking testimony on behalf of both parties under the Statute and in accordance with Equity Rule 47, be extended to and including the 28th day of November, 1914.

CLARENCE HALE,
District Judge.

13 And on December 15, 1914, there was entered (Hale J.) the following

Order as to Proof.

(Entered December 15, 1914.)

Now this 15th day of December, 1914, upon petition hereto annexed, it is hereby

Ordered that the time for taking testimony on behalf of plaintiffs under the Statute and in accordance with Equity Rule 47, be and hereby is extended to and including the 28th day of December, 1914.

CLARENCE HALE,
District Judge.

And on December 24, 1914, there was filed by the defendant the following

Petition to Amend Answer.

(Filed December 24, 1914.)

Now comes the defendant in the above entitled cause and petitions this Honorable Court for leave to amend its answer to the bill of complaint in accordance with the annexed draft.

LIBBY, ROBINSON & IVES,
EDWIN F. SAMUELS.

which said petition was by the Court allowed.

And on said December 24, 1914, there was filed by the defendant the following

Amendment to Answer.

(Filed December 24, 1914.)

(MEMORANDUM.—Amendment to Defendant's Answer is here inserted but is not printed in this Record. The answer as amended appearing in this Record, Vol. II, page 1. James E. Hewey, Clerk.)

14 And on January 7, 1915, there was entered and filed the appearance of Benjamin Phillips, Esq., as Solicitor for the defendant.

And on said January 7, 1915, defendant's and plaintiffs' proofs by deposition having been heretofore filed, said cause came on for hearing, the Honorable Clarence Hale, District Judge, sitting, and was fully heard on January 7, 8, and 9, 1915, on the pleadings and proofs filed in said cause and upon the oral testimony taken in open court and was further continued to March 18, 1915, when said cause was fully argued by the solicitors for the respective parties.

Said cause was further continued under advisement by the Court to April 8, 1915, when there was filed the opinion of the Court (Hale, J.) that a decree may be presented dismissing the bill of complaint with costs to the defendant.

And on May 24, 1915, there was signed, filed and entered (Hale, J.) the following

Final Decree.

(Entered May 24, 1915)

Now this 24th day of May, 1915, this cause having come on to be heard on pleadings, depositions and proofs adduced in open

court, and having been argued by Charles Neave, Esq., on behalf of the plaintiffs, and by Benjamin Phillips, Esq., and Edwin F. Samuels, Esq., on behalf of the defendant, now, upon consideration thereof, it is

Ordered, Adjudged and Decreed that the bill of Complaint herein, be, and hereby is, dismissed with costs to the defendant to be taxed.

CLARENCE HALE, *U. S. Judge.*

The foregoing decree is approved to form.

CHARLES NEAVE,
Counsel for Plaintiffs.
EDWIN F. SAMUELS,
Counsel for Defendant.

15 From the foregoing Final Decree the Complainants claim an appeal to the United States Circuit Court of Appeals for the First Circuit and give good and sufficient security that they will prosecute their appeal to effect and will answer all damages and costs, if they fail to make their appeal good, and said appeal is allowed.

A true record.

Attest:

JAMES E. HEWEY, *Clerk.*

Opinion, Hale, J., Dismissing Bill.

(April 8, 1915.)

This suit in equity charges infringement of Letters Patent No. 673419, issued on May 7, 1901, to complainants, on the application of Jacob J. Byers, for an invention relating to draft-rigging for railway cars. In premising, complainants point out that railway cars must be capable of being coupled together to form a train; and for this purpose a coupler is provided at each end of every car,—the coupler on the end of one car engaging that on the adjoining end of the next car. If each coupler were attached rigidly to its car, there would be strain and shock connected with the starting or stopping of the train; and for many years it has been the custom to have some yielding or cushioning devices between each coupler and the car to which it is attached. For this purpose a "draft-rigging" is provided at each end of every car; this includes a draw-bar, carrying a coupler at its outer end, and, at its inner end, certain shock-absorbing mechanism, interposed between the draw-bar and the parts which are rigidly connected with the car. Complainants point out that the shock-absorbing mechanism shown in the case before us consists substantially of a pair of springs arranged one above the other, between the draw-bar and the parts rigidly connected with the car; whether the car is pulled or pushed, the springs will be compressed between the draw-bar and the car; and the shock of pulling or of

pushing is minimized by the springs. Such devices are especially necessary upon freight cars where great weights are drawn, and the parts are made very strong, and therefore very heavy. The devices provided in this case are heavy; the coupler weighs 300
16 pounds, the yoke, 112 pounds, the springs, 55 pounds, and the followers, 60 pounds; making a total of over 700 pounds. Owing to the great strain to which the draft-rigging is at times subjected, the parts, although heavy and strong, frequently break. It is of importance, then, that there be a capacity for ready replacement; and this replacement must be achieved in a limited space under the car. Complainants allege that they have brought before the Court a draft-rigging adequate for the demands of the railroads and car builders, in that such rigging is of a character that it can be put in place on the car and taken down in parts; that the shock-absorbing mechanism is capable of being placed in position after the other parts of the rigging have been mounted on the car, and of being removed without disturbing the remainder of the draft-rigging. And they contend that the inventor, Byers, was the first to devise a draft-rigging presenting these capabilities.

Complainants allege infringement by the Defendant of claims 1, 2, 3, 5, 6, 7, 8 and 10, those claims being as follows:

1. A draft-rigging having in combination with the draw-bar, a yoke, the arms of which are connected to the sides of the draw-bar, springs arranged one above the other within the yoke, and followers also arranged between the arms of the yoke, said springs and followers being removable from below, independently of the draw-bar; substantially as described.

2. A draft-rigging having a yoke, the arms of which are adapted to be connected to the sides of a draw-bar, springs arranged one above the other between the arms of the yoke, and followers adapted to fit against the ends of both springs, and also contained between the ends of the yoke, said springs and followers being removable from below independently of the draw-bar; substantially as described.

3. A draft-rigging having a pocket, lugs, extending horizontally across the pocket at the upper and lower portions thereof respectively, followers within the pocket which bear against the lugs, and a yoke which extends within the pocket between the lugs and around the rear followers; substantially as described.

5. A draft-rigging having a yoke open at the bottom and having spring and followers arranged between the arms of the yoke,
17 and a pocket within which the yoke extends and which is also open at the bottom to permit removal of the springs and followers independently of the draw-bar; substantially as described.

6. A draft-rigging having a yoke open at the bottom and having a spring and followers arranged between the arms of the yoke, a pocket which contains the yoke, and is also open at the bottom to permit removal of the spring and followers, and a detachable closure for the opening in the pocket; substantially as described.

7. A draft-rigging having, in combination with the draw-bar and spring mechanism, a yoke the arms of which are connected to the sides of the draw-bar, a pocket within which the yoke extends, and

a key which extends horizontally through the draw-bar and yoke, and through slots in the walls of the pocket; substantially as described.

8. A draft-rigging having springs set one above the other, and a follower engaging the ends of both springs and having at the middle a stop projection which separates the springs; substantially as described.

10. A draft-rigging having springs arranged vertically, one above the other, followers, a yoke between the sides of which the springs and followers are set, said springs and followers being removable vertically from below independently of the draw-bar; substantially as described.

It will be seen that claims 1, 2 and 10 are general in their scope, and describe a draft-rigging having the combination of a draw-bar and yoke, springs and followers, with the statement that the springs and followers are removable from below, independently of the draw-bar. Claim 8 is also general, and relates to a draft-rigging having springs, one above the other, and a follower engaging the ends of the springs, and having at the middle a stop projection separating the springs. Claims 3, 5, 6 and 7 are in detail; they describe a draft-rigging having a pocket, lugs extending across the pocket at the upper and lower portions of the pocket, followers within the pocket bearing against the lugs, and a yoke extending within the pocket between the lugs and around the rear follower. Claims 5 and 6 point out that the springs and followers are removable from below, independently of the draw-bar.

18 The specification thus points out the advantages to be derived from the invention described in the claims:

"The pocket may be cast in a single piece and is provided with horizontal lugs which extend across the pocket, above and below, and constitute abutments for the followers which are set in the pocket. The pocket and lugs are suitably braced by metal ribs or flanges * * * The draw-bar shank is connected with the rear follower by a yoke which is fixed to the draw-bar by riveting or otherwise and extends within the pocket, between the lugs and around the rear follower, as shown. The pocket is open at the bottom, so that the follower-plates and springs may be removed freely from within the yoke in a vertical direction without the necessity of disengaging the yoke from the draw-bar, since the follower-plates are not connected with the draw-bar otherwise than by being placed between the sides of the yoke. This removal is made possible by taking off a cap-plate which closes the opening at the bottom of the pocket and is secured by bolts, and the follower-plates can then be pried out by means of a tool applied to toothed recesses formed in the edges of the follower-plates. * * * The advantages of my invention will be appreciated by those skilled in the art. The springs arranged one above the other, the pocket having horizontal lugs or abutments for the followers, the free removability of the springs and the followers from below from between the arms of the yoke and from the pocket, and the construction of the draft-arms, together with the

other items mentioned in the claims, constitute, severally and in combination, important parts of my invention."

Complainants say that the defendant's infringement consists in an agreement made in August, 1913, to furnish specifically constructed parts, consisting of cheek-castings and spacer-blocks, to the Pressed Steel Car Company for installation on Boston & Maine cars, with the intention that the parts should be assembled in such a way as to make up the combination of the patent in suit; and that the parts as furnished were capable of use for no other purpose; that in accordance with this agreement, during March and April. 1913, the parts referred to were furnished by the defendant to the
19 Pressed Steel Car Company,—intended by the defendant to be applied to car under-framings, constructed for Boston & Maine cars.

Complainants rely upon this agreement to infringe as sufficient to constitute technical infringement. They urge that, if sales have not actually been made, a wrong is threatened sufficient to call for an injunction, pursuant to the familiar principle that contributory infringement is intentional aiding of one person by another in the unlawful making, or selling, of a patented invention, or of some part of a patented invention, with intent and purpose of so aiding. Bump on Patents, 294; Goodyear Shoe Machinery Co. v. Jackson, 112 Fed. 146, 148; Canda v. Michigan Malleable Iron Co., 124 Fed. 487, 489. A sharp contention is raised whether or not the facts disclose a contributory infringement; even though it should be found that the defendant did agree to sell a part of the patented invention with a purpose of aiding as alleged. For proof of the alleged agreement for contributory infringement, complainants rely upon the answers to interrogatories put by them to defendant. And accordingly the alleged infringing construction is spoken of as "the machine of the interrogatories." If this machine, when put together, shall not be found to be an infringement of complainants' patent, then of course no infringement is shown. The inquiry presented at the threshold of the case is, therefore, whether or not the construction in which the alleged contributory infringement occurs was in fact an infringing device. The complainants say that such construction, —to wit, the machine of the interrogatories,—was clearly an infringing structure. The defendant says that it was not. In deciding this question, much depends upon the scope to be given the Byers invention. Complainants urge that the patent should be given a broad scope; that its purpose was to effect free removability of the springs and followers from below, from between the arms of the yoke and from the pocket. The defendant says that, in view of the prior art, the Byers patent should be limited to the construction shown in its drawings and models, and should be restricted to a rigid pocket with lugs extending horizontally across the pocket, and should conform to the other details set out in the specification, and especially described in Claims 3, 5, 6 and 7.

20 The device of the Byers patent, constructed in accordance with the detailed Claims, consists of a box or pocket, having lugs extending horizontally across it at the upper and lower portions;

having followers within the pocket which bear against the lugs, and a yoke extending between the lugs and around the rear follower. The box, or pocket, is rigid, and ties the sills together, furnishing a bearing for the followers across their upper and lower edges. Complainants' brief describes the contents of the pocket substantially thus:

"A yoke arranged horizontally with its arms at the sides of the spring, secured also, at their forward ends, to the sides of the draw-bar. The cushioning mechanism consists of two springs arranged one above the other and placed between the two followers, which are also surrounded by the yoke. The springs are separated from each other by a spacer block which supports the upper spring, and acts as a stop to prevent too great compression of the springs. The yoke is supported in longitudinal guideways in a casting attached to the draft-sills of the car. These longitudinal slots afford an extended bearing for the yoke, and prevent excessive wear on any point on the yoke, and hold it in alignment with the spring and followers. The springs, arranged one above the other, and the followers on end, may be freely inserted into the loop of the yoke vertically from below, and are retained in such position by a cover-plate which has a bearing on the bottom spring, and so holds the springs and followers in position."

Complainants speak of the pocket as a supporting casting which, as they say, quoting from Byers, "'may be cast in a single piece." They contend that the pocket may be made in any number of pieces, or in any suitable form; but, if made in a single piece, this casting or pocket will tie the sills together, a very desirable function, especially with cars having wooden draft-sills, or widely spaced steel sills. Although the rigid box, or pocket, is claimed to be non-essential to the operation of the draft-rigging, it is shown in the Byers construction, and is described in the specification of the patent. It is claimed that Byers solved the draft-rigging problem by devising "a construction in which the parts could be put up and taken down piece-
21 meal, and in which the springs and followers, in particular, were very readily accessible, and could be easily removed and replaced without disturbing the remainder of the rigging;" the substantial contention is made that the Byers invention is not limited to a rigid box, or to a one-piece box, or to any particular form of box or pocket, so long as it achieves the free removability of the springs and followers from below, between the arms of the yoke and from the pocket. It is not denied by the complainants but that every element in the Byers construction is old; but it is contended that his combination of these elements presents a new and useful invention.

In order to find the scope and extent of Byers' invention it is necessary to examine the prior art. The patent to Perry, No. 228,385, issued in 1880, discloses the idea of making separate spacer blocks and shaping them to conform to the springs. The Hinson patent, No. 625332, issued in 1899, shows the follower and spacer block combined in a device called a "head block" very similar to that shown in the Byers drawing.

The Frost patents, No. 510,854, issued in 1893, and No. 532,272, issued in 1895, disclose a draft gear having a horizontal yoke, with springs and followers removable from below. The arms of the yoke are the same horizontal plane with the openings in the top and bottom. So far as I can see, the stop castings of any of the patents referred to could be combined, without alteration, with the yoke, springs and followers of the Frost device. Frost's structure is simple, and perhaps primitive; but it gave to the public a draft attachment having a yoke riveted to the sides of the draw-bar, having its arms at the sides and the openings vertical, the springs and followers being removable from below. They seem to me to present the elements of the Byers general Claims 1, 2 and 10.

The Reagan patent in 1893, No. 491,785, sets forth that its object is "to provide a generally improved construction of draft-rigging, one of the principal advantages of which consists in the convenience it affords in separating the parts, and in their adjustment, as for removing a broken draft spring and inserting a perfect one in its place." The specific method of removal provided by this patent lacks the convenience of the later inventions;
22 but it shows inventive thought in this direction. This patent in its claims shows also cheek-plates in combination with draft timbers; these plates being molted to, and formed with, studs countersunk into the draft timbers, and a tie plate connecting the cheek-plates at their bases.

The Simons patent of 1899, No. 627,540, discloses the idea of removing the springs and followers without disconnecting any part of the yoke. It is clear that Simons had the idea of free removability. He shows the springs and followers located in openings in the sills and removable by withdrawing them from the opening in the yoke; the guides are held by means of removable bolts. Simons' structure comprises a yoke secured to the top and bottom of the draw-bar and springs and followers within the yoke, removable independently of the draw-bar. With the exception of the special feature of the Byers' pocket, and the positioning of the Simons structure, it is difficult to see any structural difference between the device of Simons and that of Byers. The same disclosure of the idea of free removability occurs in Reagan and in some others.

The structure concerning which contributory infringement is alleged, appears by the answers to the interrogatories made by the complainants to the defendant. This may be regarded as the alleged offending machine. It is said by the defendant that this structure is made under the William H. Emerick patent, issued in 1902, No. 693,643. This patent to Emerick has already been the subject of controversy, and has lately received the consideration of the Court in the Northern District of Illinois, 216 Fed. 198. It is not shown that the record in that case bears any such relation to this record as to make it helpful in the matter now before me.

It is not necessary in the case at bar to decide whether the alleged offending device is made under the Emerick patent. That device substantially shows independent counter castings, or cheek-

plates, secured to the opposite faces of the sills. Its stops engage the vertical edges of the followers only at each corner of the cheek-plate, forming ways for the yoke and limiting the play of the followers. It is contended by the defendant that these stops or lugs "instead of engaging the followers along their top and bottom edges, engage the upper and lower portions of the vertical edges
23 of the followers, as do the old-fashioned cheek-plates shown in the Perry and Reagan patents, except that defendant, in producing its cheek-plates, has cut a notch in the central portion of the vertical stop shoulder of the old-fashioned cheek-plate to provide for the passage of his yoke." It is contended further that the cheek-plates "secured to the opposite sides of the sills, are not rigidly connected; for the car structure on which they are supported, while apparently rigid, is, in fact, flexible under the tremendous strains to which it is subjected." It is urged, however, by complainants, that no single pocket casting was adopted by Byers; and that his claims, therefore, cover a construction such as the defendant's, in which the operative parts are arranged "in substantially the same way and perform the same functions as in Byers." It is urged by complainants, too, that defendant's structure makes a pocket as distinct as the pocket of Byers; that inasmuch as the Byers invention is a radically new departure in the art, it is entitled to a broad range of equivalents; and that the defendant's form of structure is clearly an equivalent, even if not regarded as the very thing specified in the patent.

Upon a careful study of the prior patented art, I cannot sustain the contention that the Byers invention is a radically new departure in the draft-rigging art. Every element in the patent is old. The combination of elements for the purpose of effecting free removability of the springs and followers from below does not reveal a new purpose. For this purpose is disclosed in various patents to which I have called attention; and although it has not been carried out with the success ascribed to the patent in suit, it has been disclosed in a sufficient degree to show inventive thought. Claims 1, 2 and 10 of the patent in suit are vague. Claim 8 relates merely to a draft-rigging for springs, and a follower, with a stop projection between the springs. The detailed Claims, namely, 3, 5, 6 and 7, relate to a pocket clearly defined as a distinct thing. —a box secured to both sills, tying the sills together and spacing them. This appears by the testimony of the expert, Mr. Levermore, and by the testimony of Byers, the inventor. So far as anything is disclosed in the record, Byers was the first to use an integral box or pocket open at the bottom, in the manner described.

The detailed claims to which I have alluded are directed to
24 the structure shown in the patent and in the drawings, and must, I think, be limited to that structure. The separate elements named in the specification are old. The only new thing is Byers' "integral housing," which may be properly described as a box or pocket, with its horizontal stops, two at the front and two at the rear, extending across the box engaging the top and bottom edges of the followers. It is the feature of the detailed claims, and

must be held to embody the sole advance which Byers has made in the art. The invention was in a crowded art, and is not entitled to a broad scope, or to carry with it a wide range of equivalents.

The record does not disclose any such commercial success of the patent in suit as to demand the special recognition of the Court. It is contended by the defendant that for commercial use the complainants have adopted the defendant's structure. Whether this is so or not, it is unnecessary to decide. It is enough to say that the proofs of commercial success of the patent in suit are not persuasive.

Limiting the Byers invention as, I think, it must be limited, I find nothing in the defendant's device which should be held to infringe. I cannot hold that anything in the Byers patent enables the complainants to enjoin the defendant from using the alleged offending device, or from contributing to its sale or use. It seems clear to me that defendant's structure is not constructed according to the detailed claims of the Byers patent. It has nothing which, to my mind, should be held to be the pocket or box constituting the leading feature of the Byers invention. The use of cheek-plates and the other elements which it employs are old. Their combination in the construction of the defendant, in my opinion, does not present the device described in the Byers patent and drawings. I am constrained to hold that the defendant's device does not infringe the Byers patent.

Inasmuch as I have held that the patent in suit is not infringed, the result will be that the bill must be dismissed; and it is not necessary to consider other questions presented in the record.

A decree may be presented dismissing the bill; with costs for the defendant.

25 *Petition for Appeal.*

(Filed July 19, 1915.)

The above-named plaintiffs, conceiving themselves aggrieved by the order and decree made and entered in the above-entitled cause on the 24th day of May, 1915, do hereby appeal from said order and decree to the United States Circuit Court of Appeals for the First Circuit, for the reasons specified in the assignment of errors, which is filed herewith, and they pray that said appeal may be allowed and a citation granted, directed to the above-named defendant, commanding it to appear before the United States Circuit Court of Appeals for the First Circuit, to do and receive what may appertain to justice to be done in the premises, and that a transcript of the record, papers and proceedings upon which said decision and decree were made, duly authenticated, may be sent to the United States Circuit Court of Appeals for the First Circuit.

CHARLES NEAVE,
Counsel for Plaintiffs.

July 2, 1915.

July 19, 1915.

Appeal allowed upon giving bond as required by law in the sum of $500.

CLARENCE HALE,
District Judge.

Assignment of Errors.

(Filed July 19, 1915.)

Now come the above-named plaintiffs, The National Malleable Castings Company and Jacob J. Byers, by their solicitor, and present with their accompanying petition for appeal from the decision and decree entered in this cause, on the 24th day of May, 1915, the following assignment of errors:

First. That the Court erred in dismissing the bill;

Second. That the Court erred in not holding the Byers patent in suit No. 673,419 to be valid and infringed as to claims 1, 2, 3, 5, 6, 7, 8 and 10 thereof;

Third. That the Court erred in not ordering an injunction
26 and an accounting with reference to the structure defined by said claims.

Fourth. That the Court erred in not directing that the defendant should pay the costs of suit.

CHARLES NEAVE,
Counsel for Plaintiffs.

July 2, 1915.

Bond to Party on Appeal.

(Filed July 19, 1915.)

Know all men by these presents:

That we The National Malleable Castings Company and Jacob J. Byers, as principals and American Surety Company of New York, as surety, are held and firmly bound unto T. H. Symington Company, in the full and just sum of Five Hundred ($500.00) dollars, to be paid to the said T. H. Symington Company, its certain attorneys, executors, administrators, successors or assigns: to which payment well and truly to be made, we bind ourselves, our heirs, executors, administrators, successors and assigns, jointly and severally, by these presents.

Sealed with our seals and dated this twenty-fourth day of May, in the year of our Lord one thousand nine hundred and fifteen.

Whereas, lately at a session of the District Court of the United States for the District of Maine in a suit pending in said Court, between The National Malleable Castings Company and Jacob J. Byers, Plaintiffs against T. H. Symington Company, Defendant, (in Equity No. 705, on Patent No. 673,419) an order and decree was rendered against the said The National Malleable Castings

Company and Jacob J. Byers, and the said The National Malleable Castings Company and Jacob J. Byers, having obtained an appeal and writ of error and filed a copy thereof in the Clerk's office of the said Court to reverse the order and decree in the aforesaid suit, and a citation directed to the said T. H. Symington Company, citing and admonishing it to be and appear at a session of the United States Circuit Court of Appeals for the First Circuit, to be
27 holden at the city of Boston, in said circuit, on the — day of —— next.

Now the Condition of the Above Obligation is Such, That if the said The National Malleable Castings Company and Jacob J. Byers shall prosecute their appeal and writ of error to effect, and answer all damages and costs if they fail to make their plea good, then the above obligation to be void; else to remain in full force and virtue.

THE NATIONAL MALLEABLE CASTINGS CO.,
By E. C. WHITTEMORE,
Chairman of the Board.

Attest:

N. S. LEWIS. [SEAL.]
Secretary.

JACOB J. BYERS. [SEAL.]
AMERICAN SURETY COMPANY OF NEW YORK.
By HOWARD D. PRITCHARD,
Resident Vice-President.

Attest:

HOWARD C. WILLIAMS. [SEAL.]
Resident Assistant Secretary.

Sealed and delivered in Presence of

JOSEPH P. WRIGHT,
ERNEST W. WHITTEMORE,
As to the National Malleable Castings Co.
LOUIS W. DE WITT,
ALBERT O. BUCKINS, JR.,
As to Jacob J. Byers.
EDWARD F. ARCHER,
EUGENE B. PIKE,
As to American Surety Company of New York.

Approved July 19, 1915.

C. HALE,
District Judge.

Præcipe as to Appeal Record.

(Filed July 19, 1915.)

The plaintiffs, appellants, indicate the following as the portions of the record to be incorporated in the record on transcript on appeal:

Bill of Complaint.

Answer.

Plaintiffs' Interrogatories and Defendant's Answers
28 thereto.

Testimony as printed in Record for Plaintiffs and Record for Defendant, together with stipulation and exhibits.

Opinion.

Final Decree.

Petition for Appeal.

Assignment of Errors.

Bond on Appeal.

Præcipe.

The plaintiffs, appellants, further request that all physical exhibits be transmitted with the transcript on appeal.

CHARLES NEAVE,
Counsel for Plaintiffs.

We assent to the above-proposed form and request.

EDWIN F. SAMUELS,
Counsel for Defendant.

The parties join in requesting that those portions of the record in the above-entitled cause which have been printed for use in the District Court be used as a part of the transcript on appeal, without reprinting or reducing to abbreviated or narrative form the testimony and depositions therein.

CHARLES NEAVE,
Counsel for Plaintiffs.
EDWIN F. SAMUELS,
Counsel for Defendant.

July 19, 1915.

So ordered.

CLARENCE HALE,
U. S. Judge.

29 *Stipulation as to Certain Original Exhibits.*

(Filed August 25, 1915.)

It is hereby stipulated by and between counsel for the parties hereto that, subject to the approval of the court, the following

exhibits may be certified to the Court of Appeals, as physical exhibits, and need not be reproduced:

Plaintiffs' Exhibits.

No. 6. Collection of photographs taken at Laconia;
No. 7. Collection of tags removed from cheek castings and spacer blocks at Pressed Steel Car Company;
No. 12. First Byers Time Book;
No. 13. Second Byers Time Book;
No. 18. 1915 Almanac, page 36 only to be reproduced.

Defendant's Exhibits.

B, List of repairs;
C, Account Book;
F, Memorandum book marked "Special Repairs";
P, Blue prints (4) plaintiffs' drawing locomotive draft gear.

CLARENCE D. KERR,
Counsel for Plaintiffs.
GILBERT P. RITTER,
Of Counsel for Defendant.

Approved Aug. 25, 1915.

C. HALE,
District Judge.

30 *Citation on Appeal.*

UNITED STATES OF AMERICA, *ss:*

The President of the United States to The T. H. Symington Company, a corporation organized and existing under the laws of the State of Maine and a citizen of said State, Greeting:

You are hereby cited and admonished to be and appear in the United States Circuit Court of Appeals for the First Circuit, in the city of Boston, Massachusetts, on the eighteenth day of August next, pursuant to an appeal duly obtained from a decree of the District Court of the United States for the District of Maine, wherein The National Malleable Castings Company, a corporation duly organized and existing under the laws of the State of Ohio and a citizen of the State of Ohio, and Jacob J. Byers, of Chicago, in the State of Illinois, and a citizen and resident of said State of Illinois are appellants, and you are appellee, to show cause, if any there be, why the said decree, entered against the said appellants, should not be corrected, and why speedy justice should not be done to the parties in that behalf.

Witness, the Honorable Clarence Hale, Judge of the District Court of the United States for the District of Maine, this nineteenth day

of July, in the year of our Lord one thousand nine hundred and fifteen.

CLARENCE HALE,
District Judge.

Acknowledgment of Service on Citation.

UNITED STATES OF AMERICA,
District of Maine, ss:

August 11, A. D. 1915.

Due and sufficient service of the foregoing citation is hereby acknowledged.

GILBERT P. RITTER,
Of Counsel for The T. H. Symington Company.

31 *Clerk's Certificate.*

UNITED STATES OF AMERICA,
District of Maine, ss:

I, James E. Hewey, Clerk of the District Court of the United States for the District of Maine within the First Circuit, hereby certify that the three (3) volumes entitled as follows:

Volume I., Plaintiffs' Record—Pleadings, Testimony and Exhibits;
Volume II., Defendant's Record—Pleadings, Testimony and Exhibits;
Volume III., Proceeding in said District Court with References to Volumes I. and II.;

this certificate being attached to each of said three volumes, contain and are a true copy of the record and all proceedings of said District Court in the causes in equity entitled:

No. 705.

THE NATIONAL MALLEABLE CASTINGS COMPANY and JACOB J. BYERS,
Plaintiffs,

v.

THE T. H. SYMINGTON COMPANY, Defendant,

in said District Court determined, the Opinion of the District Court of April 8, 1915 (dismissing Bill of Complaint), the Petition for Appeal and Assignment of Errors, Bond to Party on Appeal, Præcipe as to Appeal Record, and also the original Citation, issued upon said Petition for Appeal, with Acknowledgment of Service thereon by counsel of record.

In testimony whereof, I have hereunto set my hand and affixed the seal of said District Court, at Portland, in said District of Maine, this fourth day of September, A. D. 1915.

[SEAL.] JAMES E. HEWEY, *Clerk.*

32 *Order of Enlargement of Time for Docketing Case and Filing Record.*

August 17, 1915.

For good cause shown, it is ordered that the time for docketing this case and filing the record thereof with the clerk of this court be enlarged to and including September 10, 1915.

CLARENCE HALE,
District Judge.

33 United States Circuit Court of Appeals for the First Circuit, October Term, 1915.

No. 1147.

THE NATIONAL MALLEABLE CASTINGS COMPANY et al., Plaintiffs, Appellants,

v.

THE T. H. SYMINGTON COMPANY, Defendant, Appellee.

Appeal from the District Court of the United States for the District of Maine.

Before Putnam, Dodge and Bingham, JJ.

Opinion of the Court.

February 3, 1916.

BINGHAM, J.:

The plaintiffs, The National Malleable Castings Company and Jacob J. Byers, are the exclusive owners of United States Letters Patent, No. 673,419, issued to them May 7, 1901, on the application of said Byers filed April 21, 1900, and complain of its infringement by the defendant, The T. H. Symington Company.

The patent is for draft-rigging for railway cars, and relates to structures used for coupling cars and intended to prevent the shock or jar, due to pushing and pulling the train, from being transmitted from car to car. To do away with this it has been customary to provide a cushioning or yielding device between each coupler and the car to which it is attached. This mechanism is called a draft-rigging and includes the draw-bar carrying the coupler at its outer

end, and at its inner end shock-absorbing mechanism interposed between the draw-bar and the parts which are rigidly connected with the car.

34 The shock-absorbing mechanism of the patent in suit consists of a single spring or a pair of springs arranged one above the other, the ends of which are engaged by followers, the springs and followers being enclosed by a yoke, the arms of which are connected to the rear end of the draw-bar by rivets or a removable key. This mechanism is held in place by parts rigidly connected to the car, and the relation between the spring mechanism and the parts rigidly connected to the car is such that, whether the car is pulled or pushed, the springs will be compressed between the draw-bar and the car and the shock thus greatly reduced.

On freight cars where great weights are drawn, it is necessary to make the parts very strong and heavy. The weight of those provided under the patent in suit are as follows: Coupler, 300 pounds; yoke, 112 pounds; springs, 55 pounds each; followers, 60 pounds each; key, 40 pounds; spacer-block, 15 pounds; making a total of over 700 pounds. Notwithstanding the great strength of the parts, they frequently break and have to be replaced. The capacity of ready removal and replacement of the parts is, therefore, an important factor, and, in view of their weight and location in a limited space under the car, the arrangement of the mechanism so that the desired result may be accomplished presents a difficult problem.

The special feature relied upon by the plaintiffs in connection with their device is that the shock-absorbing mechanism may be placed in position after the other parts have been affixed to the car, and, in case of breakage, may be removed without disturbing the yoke and draw-bar; and they contend that Byers was the first to invent a mechanism presenting the combination of elements disclosed in his patent that would answer these requirements.

In the specification, after referring to certain drawings which represent the shank of the draw-bar and the pocket, which is set between the draft timbers to which it is affixed by bolts, the patentee says: "The pocket may be cast in a single piece and is provided with horizontal lugs 5 5, which extend across the pocket, above and below, and constitute abutments for the followers 6 6′, which are set in the pocket. The pocket and lugs are suitably braced

35 by metal ribs or flanges, as shown. 7 7′ are springs, placed, preferably, one above the other between the followers, and to hold them in place, as well as to limit the approach of the followers, I may provide the latter with projecting stops 8, which extend from such followers between the springs. The draw-bar shank 2 is connected with the rear follower 6′ by a yoke 2′, which is fixed to the draw-bar by riveting or otherwise, and extends within the pocket, between the lugs and around the rear follower, as shown. The pocket is open at the bottom, so that the follower-plates and springs may be removed freely from within the yoke in a vertical direction without the necessity of disengaging the yoke from the draw-bar since the follower-plates are not connected with the draw-bar otherwise than by being placed between the sides of the

yoke. This removal is made possible by taking off a cap-plate 9, which closes the opening at the bottom of the pocket and is secured by bolts 9*a*, and the follower-plates can then be pried out by means of a tool applied to toothed recesses 10, formed in the edges of the follower-plates." He also provides for "a stop-piece 12, made separate from the follower-plates and interposed between the springs, performing the same function as is performed by the projections from the follower-plates shown in Figs. 1 and 4"; he also provides "in addition to the stops 12 * * * as an alternate construction stops 18, either hollow or solid, which may be set axially within the springs between the follower-plates." He refers to Fig. 4 as presenting a front elevation of the follower, which discloses that it is rectangular in shape, but in the figure has the horizontal stop 8.

The claims said to be infringed by the defendant are 1, 2, 3, 5, 6, 7, 8 and 10. They read as follows:

"1. A draft-rigging, having in combination with the draw-bar, a yoke, the arms of which are connected to the sides of the draw-bar, springs arranged one above the other within the yoke, and followers also arranged between the arms of the yoke, said springs and followers being removable from below, independently of the draw-bar; substantially as described.

"2. A draft-rigging having a yoke, the arms of which are adapted to be connected to the sides of the draw-bar, springs arranged
36 one above the other between the arms of the yoke, and followers adapted to fit against the ends of both springs, and also contained between the ends of the yoke, said springs and followers being removable from below, independently of the draw-bar; substantially as described.

"3. A draft-rigging having a pocket, lugs, extending horizontally across the pocket, at the upper and lower portions thereof, respectively, followers within the pocket which bear against the lugs, and a yoke which extends within the pocket between the lugs and around the rear follower; substantially as described.

"5. A draft-rigging having a yoke open at the bottom and having a spring and followers arranged between the arms of the yoke, and a pocket within which the yoke extends and which is also open at the bottom to permit removal of the spring and followers independently of the draw-bar; substantially as described.

"6. A draft-rigging having a yoke open at the bottom, and having a spring and followers arranged between the arms of the yoke, a pocket which contains the yoke, and is also open at the bottom to permit removal of the spring and followers, and a detachable closure for the opening in the pocket; substantially as described.

"7. A draft-rigging having, in combination with the draw-bar and spring mechanism, a yoke, the arms of which are connected to the sides of the draw-bar, a pocket within which the yoke extends, and a key which extends horizontally through the draw-bar and yoke, and through slots in the walls of the pocket; substantially as described.

"8. A draft-rigging having springs set one above the other, and a follower engaging the ends of both springs and having at the

middle a stop projection which separates the springs; substantially as described.

"10. A draft-rigging having springs arranged vertically, one above the other, followers, a yoke between the sides of which the springs and followers are set, said springs and followers being removable vertically from below, independently of the draw-bar; substantially as described."

Claim 8 relates to a draft-rigging having springs, one above the other, and a follower engaging the ends of the springs with a stop projection at the middle and separating the springs. It does not call for a yoke, but would require a horizontal one if a yoke were used.

37 Claims 1, 2 and 10 are more general. They disclose a draft-rigging having in combination a draw-bar, a yoke, springs and followers. The construction called for in these claims is such as to require the yoke to be placed in a horizontal position, with its arms connected, or adapted to be connected, to the sides of the draw-bar. The springs are arranged vertically, one above the other, within the yoke, and the followers are "arranged," "set" or "contained" between the arms, sides or ends of the yoke, both springs and followers being removable from below, independently of the draw-bar.

In claims 3, 5, 6 and 7 a pocket is introduced as an additional element; and in Claim 3 the element of "lugs extending horizontally across the pocket at the upper and lower portions thereof, respectively," is specified, which element does not expressly appear in the rest of these claims. In this claim, the followers bear against the lugs, necessitating their being placed in a vertical position within the pocket, and the yoke, which extends around the rear follower and between the lugs of the pocket, is of necessity placed horizontally. This claim does not enumerate springs as an element in the combination, but, as a draft-rigging embodies a shock-absorbing mechanism and springs are disclosed in the specification as a part of such mechanism, they may be understood as forming a part of the device, not for the purpose of establishing novelty, but for making it workable.

Claims 5, 6 and 7, do not enumerate lugs as an element, either as extending horizontally across the pocket or as extending horizontally into the plane of the vertical lines of the interior faces of the yoke, but, as the followers disclosed in the specification are rectangular in shape, and, according to the claims, are arranged between the sides of a horizontal yoke, the device of the claims calls for horizontal lugs in order to be operative, and the specification discloses such lugs. The language of all these claims shows that the yoke is positioned horizontally.

Claim 5 provides for the removal of the springs and followers independently of the draw-bar, but claims 6 and 7 do not, except as the construction called for is such as will permit it. The distinctive feature of Claim 6 is that a detachable cover is provided for

38 closing the pocket; and of Claim 7, is a key extending horizontally through the draw-bar, yoke and slots in the walls of the pocket.

In August, 1913, the defendant entered into an agreement with the Pressed Steel Car Company to furnish cheek-plates and spacer-blocks for a special design for installation by the Car Company on Boston & Maine cars, and, subsequently, furnished such parts with the intention that they should be assembled with other parts in such a way as would, according to the plaintiffs' contention, make up the combination of the patent in suit.

The construction of the alleged infringing device is disclosed in the answers of the defendant to certain interrogatories, and is spoken of as the Machine of the Interrogatories; and the question is whether the device thus disclosed infringes the patent in suit.

In the District Court it was held, with regard to claims 1, 2, 8 and 10, that every element in the claims was old and that the combination was anticipated; that claims 3, 5, 6 and 7 related to an integral box or pocket open at the bottom and were limited to that structure; that all the other elements enumerated in these claims were old, the integral pocket being the only new thing and the sole advance which Byers made in the art; and that the invention thus limited was not infringed by the device of the interrogatories, as it did not have the integral pocket of claims 3, 5, 6 and 7, but employed cheek-plates.

Was the District Court right in holding that claims 1, 2 and 10 were anticipated? The defendant says that he was; that the language of the claims, "followers * * * arranged between the arms of the yoke"—"followers * * * contained between the ends of the yoke," and "a yoke between the sides of which * * * followers are set"—cannot properly be construed to mean "followers being wholly contained within the space bounded by the inner vertical faces of said yoke."

As heretofore pointed out, the follower-plates of the plaintiffs' device are described in the specification as rectangular in shape, as placed between the sides of the yoke, and as being removable
39 from below by being "pried out by means of a tool applied to toothed recesses 10, formed in the edges of the follower-plates." The claims do not specifically state the shape of the followers; they do, however, state that they possess the quality of being "removable from below, independently of the draw-bar, substantially as described," which, according to the specification, means that they may be removed "in a vertical direction without the necessity of disengaging the yoke from the draw-bar" and be pried down by means of a tool applied to toothed recesses in the edges of the follower-plates. To be capable of being thus removed, the vertical edges of the followers must be straight throughout their length, and, as the claims disclose that the followers are "contained between," "arranged between," or "set between" the ends, arms or sides of the yoke, the fair inference is that the followers called for by these claims, as well as by the specification, are rectangular in shape.

The question then is, whether these claims for a draft-rigging having in combination with the draw-bar a horizontal yoke, springs vertically arranged within the yoke, and followers rectangular in shape set or contained between the sides or arms of the yoke, the springs and followers being removable from below, independently of

the draw-bar, are anticipated, and, if not, are infringed by the device of the interrogatories.

The devices of the prior art which have been called to our attention fail to disclose such a combination, and we regard the combination as novel and the prima facie evidence of invention, due to the issuing of the patent, as not overcome.

In the patent granted to Frost (No. 232,272, January 8, 1895), the device contemplates the use of a single spring, and the followers, instead of being rectangular in shape, have arms extending horizontally above and below the yoke. They could not be removed by prying them directly down, without first removing the spring or springs, as in Byers'. It would be necessary to first remove the spring, then turn the followers to a position in which their arms would be lengthwise of the yoke before they could be removed. This surely is not the solution of the problem of free removability presented by Byers, especially when the weight of the parts and pressure of the springs are considered.

In the patent granted to Simons (No. 627,540, June 27, 1899), the yoke is arranged vertically, not horizontally, and the springs and followers are set horizontally and are removable from the side and not the bottom.

In Pilcher (No. 616,965, January 3, 1899), the yoke is horizontal, and the arms of the yoke extend through holes in the followers, thereby preventing their removal without disconnecting the yoke from the draw-bar.

In Reagan (No. 491,785, February 14, 1893), and Miner (No. 570,038, October 27, 1896), the yoke is placed vertically, and to remove the springs and followers the yoke has to be disconnected from the draw-bar or taken apart.

While we regard these claims as valid, we are of the opinion that the defendant does not infringe any of them, as it does not furnish any element that enters into them. Thompson & Houston Electric Co. v. Ohio Brass Co., 80 Fed. 712; Leeds & Catlin Co. v. Victor, 213 U. S. 325.

Claim 8 is limited to followers with stop projections used in connection with two springs, and the followers and springs are to be used in connection with a horizontal yoke or some other draw-bar attachment. A follower device with a stop projection was old as shown in the patent granted to Hinson (No. 635,322, October 24, 1899). This claim is not only anticipated by the prior art, but is not infringed, as the defendant does not provide followers with projecting stops.

It does not seem to us, however, that the District Court was right in holding that claims 3, 5, 6 and 7 were limited to an integral pocket. Nothing is said in these claims about the pocket being integral or a distinct entity, while in Claim 9, which is not in issue, such an intention is plainly manifested. Moreover, the specification shows that the patentee's conception was not limited to an integral pocket, for he there states that "the pocket may be cast in a single piece." When the housing is not integral, the parts, on being assembled upon the car, form a pocket. The parts are nothing more than the cheek-

castings of the prior art, with the single exception that the
41 lugs or bearings for the followers, instead of being arranged vertically, as in the old cheek-plates, are projected horizontally across or into the vertical lines of the plane of the yoke.

In the earlier devices of the draft rigging art, the followers were arranged horizontally rather than vertically and the ends of the followers engaged the vertical lugs of the old cheek-plates. During the period covered by the Frost and Pilcher patents, when the method was introduced of placing the followers vertically, it became necessary, in order to avail themselves of the vertical lugs of the old cheek-plates, to so construct the followers that their sides would extend horizontally and engage the vertical lugs, but Byers conceived the idea of projecting the lugs horizontally to engage the followers, thus doing away with the horizontally-projecting arms of the followers of the Frost device. By so doing, he was enabled to make his construction stronger and render the removability of the springs and followers from below easier. While the followers in the Frost patent are removable from below without disengaging the yoke from the draw-bar, they are not as readily or easily removed as in Byers, and the extended arms on the followers of Frost were more likely to become broken as they could not be reinforced and strengthened as could the lugs in Byers' device. Cheek-plates cast integrally and forming a pocket were old in the art, as shown in the patent granted to Perry, June 1, 1880, but the lugs in it, as in the old cheek-plates, were arranged vertically, not horizontally, and a guideway was formed for the ends of the followers in the cheeks of the pocket or casting by lowering or sinking the face in a limited area of each cheek, thus forming the lugs and guideway.

The defendant concedes that claims 3, 5, 6 and 7 are valid if limited to an integral pocket. It denies, however, that they are valid if not so limited; but we have held that the term "pocket" as used in these claims is not limited to an integral pocket or housing, and have shown that the housing, when not cast integrally, makes two cheek-plates which, when put in position on a car, form a pocket; and that the cheek-plates, when put in position and forming a pocket contain an element, namely, lugs which extend horizontally
42 across or into the vertical lines of the plane of the yoke, and constitute stops for the followers, and that this element is not disclosed in the prior art.

The defendant claims that this element is old, and is shown in Letters Patent No. 693,643, granted to Emerick, February 18, 1902, the application having been made May 24, 1901. It will be seen that the application for this patent was not made until after the patent to Byers was issued. But the defendant contends that Emerick conceived and disclosed his invention in the spring or summer of 1899. The evidence, however, adduced in support of the proposition does not answer the requirements called for in cases of this character. The proof lies wholly in parole, is equivocal, and the time that has elapsed between the alleged conception and the filing of the application is of such length that it does not establish the clear conviction

necessary to prove anticipation. Emerson & Norris Co. v. Simpson, 202 Fed. 747.

In the device of the interrogatories the cheek-plates furnished by the defendant contain lugs which extend horizontally into the plane of the vertical lines of the yoke, and constitute stops or bearings for the followers in the upper and lower portions of the pocket when the parts are assembled. The guideways for the yoke, which are disclosed in the Byers' patent, are present in the cheek-plates of this device. They are made, not merely by cutting away the central portions of the vertical lugs of the old cheek-plates, but by cutting below the face of the plates, thereby converting the remaining portions of what were previously vertical lugs into horizontal lugs projecting across or into the plane of the vertical lines of the yoke, when the parts are assembled, and manifest a clear intention to adopt the construction of the Byers' device. We are, therefore, of the opinion that in so doing, the defendant infringes Claim 3, and this is so, notwithstanding the horizontal lugs of the infringing device do not extend entirely across the pocket. The idea of horizontally projecting lugs was new with Byers. In his commercial device he does not construct the lugs so that they extend entirely across the pocket, and be-
43 & 44 ing the first to conceive a device of this character, we think that he is entitled, as a reasonable equivalent, to the exclusive use of such a lug, although it does not extend entirely across the pocket.

Claims 5 and 6 do not include lugs as a part of the combinations. They do, however, specify a pocket and followers arranged between the arms of a horizontal yoke within the pocket and provide for free removability from below. As these claims contemplate followers rectangular in shape included entirely within the vertical lines of the yoke, with free removability from below, the same as claims 1, 2 and 10 do, the combination presented is novel for the reasons stated with reference to those claims. And, as the parts forming the pocket when it is not cast integrally are nothing but cheek-plates, and the defendant furnishes cheek-plates for the device of the interrogatories, it infringes the combination of these claims.

In Claim 7, the only distinctive feature is the key extending horizontally through corresponding slots in the pocket, yoke and draw-bar. Whether this is a novel feature in plaintiffs' device, it is unnecessary to determine, as the cheek-plates furnished by the defendant in the device of the interrogatories do not infringe the claim, the slot in the cheek-plates being of an entirely different character, and in no way adapted to serve the purpose of holding the draw-bar in position in case the yoke should break.

We regard claims 3, 5 and 6 as valid and infringed.

The decree of the District Court is reversed, and the case is remanded to that court, with directions to enjoin the defendant from further constructing or selling the stop-pieces and cheek-plates referred to in the interrogatories made a part of the record in this case, for an accounting, and for costs in the District Court and on this appeal.

45 In the United States Circuit Court of Appeals for the First Circuit, October Term, 1915.

No. 1147.

THE NATIONAL MALLEABLE CASTINGS COMPANY and JACOB J. BYERS, Plaintiffs, Appellants,

vs.

THE T. H. SYMINGTON COMPANY, Defendant, Appellee.

Petition for Rehearing.

To The Honorable The Judges of Said Court:

Your petitioner, The T. H. Symington Company, defendant and appellee, hereby respectfully represents:

I. That it is advised and believes that this court has, in its opinion filed February 3, 1916, in order to differentiate the invention which it finds to be covered by claims 1, 2, 3, 5, 6 and 10 of the Byers
46 Patent No. 673,419, from what it finds to be the art prior to the date of such invention construed into each of said claims an element or structural feature not expressed in terms in either of said claims but conceived by the court to be of the very gist and essence of the Byers invention as claimed in the Byers patent, namely, followers rectangular in shape having their vertical edges straight throughout their length and which are included entirely within the vertical lines of the interior of the yoke, so as to possess the quality of being freely removable from below by prying them directly downward; but that the court, in so construing said claims, has overlooked the fact that the record discloses, by the file wrapper and contents of the application for the Byers patent (Plaintiff's Exhibit No. 16), that the Commissioner of Patents in granting the patent and the applicant Byers in soliciting the patent, regarded and understood the claims as not subject to such interpretation or limitations, and that the court has, therefore, fallen into an error in finding that claims 1, 2 and 10 of the Byers patent are valid and that claims 3, 5 and 6 of said patent are valid and infringed as so interpreted by the court.

II. Your petitioner further represents that its above expressed understanding of the views of the court respecting the scope of the Byers invention, is gathered from the following excerpts from the court's opinion, viz.:

(p. 6) "As heretofore pointed out, the follower-plates of the plaintiffs' device are described in the specification as rectangular in shape, as placed between the sides of the yoke, and as being removable from below by being 'pried out by means of a tool applied to toothed recesses 10, formed in the edges of the follower-plates.' The claims do not specifically state the shape of the followers; they do, however, state that they possess the quality of being 'removable from
47 below, independently of the draw-bar, substantially as described,' which, according to the specification, means that they

may be removed 'in a vertical direction without the necessity of disengaging the yoke from the draw-bar' and *he* pried down by means of a tool applied to toothed recesses in the edges of the follower-plates. To be capable of being thus removed, the vertical edges of the followers must be straight throughout their length, and, as the claims disclose that the followers are 'contained between,' 'arranged between,' or 'set between' the ends, arms or sides of the yoke, the fair inference is that the followers called for by these claims, as well as by the specification, are rectangular in shape."

Again:

(p. 7) "The question then is, whether these claims for a draft rigging having in combination with the draw-bar a horizontal yoke, springs vertically arranged within the yoke, and followers rectangular in shape set or contained between the sides or arms of the yoke, the springs and followers being removable from below, independently of the draw-bar, are anticipated, and, if not, are infringed by the device of the interrogatories.

"The devices of the prior art which have been cited to our attention fail to disclose such a combination, and we regard the combination as novel and the prima facie evidence of invention, due to the issuing of the patent, as not overcome."

Again:

(p. 7) "In the patent granted to Frost (No. 232,272, January 8, 1895), the device contemplates the use of a single spring, and the followers, instead of being rectangular in shape, have arms extending horizontally above and below the yoke. They could not be re-
48 moved by prying them directly down, without first removing the spring or springs, as in Byers'. It would be necessary to first remove the spring, then turn the followers to a position in which their arms would be lengthwise of the yoke before they could be removed. This surely is not the solution of the problem of free removability presented by Byers, especially when the weight of the parts and pressure of the springs is considered."

Again:

(p. 9) "In the earlier devices of the draft rigging art, the followers were arranged horizontally rather than vertically and the ends of the followers engaged the vertical lugs of the old cheek-plates. During the period covered by the Frost and Pilcher patents, when the method was introduced of placing the followers vertically, it became necessary, in order to avail themselves of the vertical lugs of the old cheek-plates, to so construct the followers that their sides would extend horizontally and engage the vertical lugs, but Byers conceived the idea of projecting the lugs horizontally to engage the followers, thus doing away with the horizontally-projecting arms of the followers of the Frost device. By so doing, he was enabled to make his construction stronger and render the removability of the springs and followers from below easier. While the followers in the Frost patent are removable from below without disengaging the yoke from the draw-bar, they are not readily or as easily removable as in Byers, and the extended arms on the followers of Frost were more likely to become

broken as they could not be reinforced and strengthened as could the lugs in Byers' device."

Again:

(p. 11) "Claims 5 and 6 do not include lugs as a part of the combinations. They do, however, specify a pocket and followers
49 arranged between the arms of horizontal yoke within the pocket and provide for free removability from below. As these claims contemplate followers rectangular in shape included entirely within the vertical lines of the yoke, with free removability from below, the same as claims 1, 2 and 10 do, the combination presented is novel, for the reasons stated with reference to those claims."

III. Your petitioner further represents that, in arriving at the findings that claims 1, 2, 3, 5, 6 and 10, of the Byers patent are to be so construed as to "contemplate followers rectangular in shape included entirely within the vertical lines of the yoke, with free removability from below," and that, as thus interpreted, said claims are valid and those numbered 3, 5 and 6 are infringed, the court has overlooked and misapprehended the following facts and has, therefore, fallen into an error.

(*a*) Plaintiffs' Exhibit No. 16 (being a certified copy of the file wrapper, contents and drawings of the application on which the Byers patent was granted) discloses the fact that followers extending laterally beyond the vertical sides of the yoke and not entirely included within the sides of the yoke were in the mind of the Commissioner of Patents in granting the patent and in the mind of the applicant Byers in soliciting the patent, and that the "followers" specified in the claims were not regarded either by the Commissioner of Patents or by the applicant as limited to followers of rectangular shape, or such as were included entirely within the vertical lines of the yoke, or such as might be removed from below with any special or high degree of ease or freedom. The understanding of the Commissioner and of the applicant in this regard appears from the history of the granting of claim 10 of the Byers patent. The original number of this claim
50 was 16; it subsequently became claim numbered 14, and finally claim 10. (Rec. Vol. 1, p. 217.) As originally presented and as finally allowed the terms of this claim differed in nothing except that the claim as allowed contained the words "independently of the draw-bar," inserted in it by amendment (Rec. Vol. 1, p. 222, lines 12-13) in view of the following rejection by the Commissioner holding that "the terms of the claim are met" (Rec. Vol. 1, p. 220):

"Claim 16 is rejected on (Pilcher) patent No. 616,965. The springs and followers in this patent are not removable in a vertical direction, but since the claim is for a draft rigging it is thought the the terms are met for the reason that the springs and followers may be removed vertically from the casing which supports them by removing the whole draw-bar."

The identity of terms employed in claim 16 as rejected and in claim 10 as granted is shown by a comparison of those claims here set out, the words in italics in claim 10 representing the only difference in the terms of the two.

Original form.	Allowed form.
16. A draft rigging having springs arranged vertically, one above the other, followers, a yoke between the sides of which the springs and followers are set, said springs and followers being removable vertically from below; substantially as described.	10. A draft rigging having springs arranged vertically, one above the other, followers, a yoke between the sides of which the springs and followers are set, said springs and followers being removable vertically from below *independently of the draw-bar;* substantially as described.

The Pilcher patent was held by the Commissioner to meet the terms of claim 16, and the applicant Byers, by amending the
51 claim instead of pointing out that its terms were not met by the construction disclosed in the Pilcher patent, admitted and acquiesced in the correctness of the Commissioner's interpretation of those terms. The meaning of those terms is therefore definitely fixed by reference to the Pilcher patent, and Pilcher shows (Rec. Vol. II, p. 310, Figs. 9-11) followers which project horizontally beyond the sides of the yoke and which are not included entirely within the vertical lines of the yoke.

In view of the numerous and controlling decisions of the United States Supreme Court determining that the construction to be given to claims of letters patent is controlled by the proceedings on the application in the Patent Office (e. g., Roemer v. Peddie, 132 U. S., 317, and cases there collected; Morgan Envelope Co. v. Albany Paper Co., 152 U. S. 429; Hubbell v. United States, 179 U. S., 80), it is believed that the court has overlooked the matter appearing in Plaintiff's Exhibit No. 16, the file wrapper and contents of the Byers patent.

(*b*) The opinion of this court (p. 6) states that "the follower-plates of the plaintiffs' device are described in the specifications as rectangular in shape."

In this the court is in error as the specification of the Byers patent does not so describe the followers. The followers are carefully described in the specification as (line 45) provided "with projecting stops 8," as (line 65) provided with "toothed recesses 10, formed in the edges of the follower-plates," and as (line 68) having "bevel ends"; but all reference to the shape of the followers is omitted from the specification. A rectangular form of follower is merely shown in the drawings of the Byers patent; there is no description.

52 (*c*) The opinion of this court (p. 7) states that:

"The claims do not specifically state the shape of the followers; they do, however, state that they possess the quality of being 'removable from below, independently of the draw-bar, substantially as described,' which, according to the specification, means that they may be removed 'in a vertical direction without the necessity of disengaging the yoke from the draw-bar' and be pried down by means

of a tool applied to toothed recesses in the edges of the follower-plates."

In treating the phrase "substantially as described," with which each claim of the Byers patent is concluded, as qualifying the word "followers" so as to import that the followers are required to have the structural characteristics "as described" in the specification, the court has overlooked the fact that the established rule is that the phrase "substantially as described" qualifies the whole combination of elements and does not qualify any one element or part recited in the claim in any further or different degree than it qualifies every element mentioned in the claim, and this is indicated and emphasized by the punctuation of the claims themselves, in which the phrase "substantially as described" is preceded by a semi-colon. And the court has also overlooked the fact that it is a settled rule of interpretation of the Patent Office, binding upon the patentee and upon which the public has a right to rely in ascertaining the true interpretation of claims, to reject the clause "substantially as described" as importing particular limitations into a claim; National Tube Co. v. Mark et al., 216 F. 507; 133 C. C. A., 13 (collecting the Commissioner's decisions); and the court has, therefore, fallen into an error in finding that the words "substantially as described" import into the claims the "described" details of the followers, so as to differentiate the Byers invention from the prior art.

In finding that the defendant infringes the court has also
53 apparently overlooked the fact that the followers of the draft-rigging for which the defendant furnished cheek-plates and spacer-blocks have no "toothed recesses" formed in their edges nor are they formed with "bevel-ends," both of which are "described" features of construction of the followers of the Byers patent.

IV. Your petitioner represents that in arriving at the finding that claims 3, 5 and 6 of the Byers patent have been infringed, the court has fallen into an error by construing those claims to specify followers "substantially as described" without also construing them, according to the same rule, to specify a "pocket" "substantially as described"; and your petitioner further represents that the recited combinations are the things which are the subjects of the claims and that the claims should be construed according to a uniform rule of equivalency applicable to all the elements of the combination; Le Roy v. Tatham, 14 How., 156.

V. Your petitioner further represents that, in the just expectation that the claims of the Byers patent would not be construed so as to attach any such significance to the words "substantially as described" as would import particular limitations into the claims to thereby differentiate them from the prior art, and in the just and reasonable expectation that the teachings of the file wrapper and contents of the Byers patent (Plaintiffs' Exhibit No. 16), would control the interpretation of that patent, and not anticipating an unprecedented interpretation of the claims of the patent, your petitioner was led to omit from its record the prior patent of Albert E. Mitchell, No. 517,146, March 27, 1894, a copy of which is submitted herewith, and was led to restrict its record to such patents of

the prior art as would meet and anticipate the terms of the
54 claims of the Byers patents as those claims would be understood if no special significance were attached to the words "substantially as described"; and your petitioner, therefore, failed to protect itself against the error into which the court has fallen in finding in its opinion that (p. 9):

"Byers conceived the idea of projecting the lugs horizontally to engage the followers, thus doing away with the horizontally-projecting arms of the followers of the Frost device."

And (pp. 10-11):

"We are, therefore, of the opinion that in so doing, the defendant infringes claim 3, and this is so, notwithstanding the horizontal lugs of the infringing device do not extend entirely across the pocket. The idea of horizontally projecting lugs was new with Byers. In his commercial device he does not construct the lugs so that they extend entirely across the pocket, and being the first to conceive a device of this character, we think that he is entitled, as a reasonable equivalent, to the exclusive use of such a lug, although it does not extend entirely across the pocket."

Your petitioner shows that the Mitchell patent has followers, F, which are included entirely within the vertical lines of the interior faces of a horizontal yoke, E, and which, at their upper and lower ends above and below the yoke, engage separate stop castings, C, that are secured to draft timbers, O, so as to extend horizontally entirely across the space from one draft timber to the other.

A typical claim of the Mitchell patent of 1894 is as follows:

"2. In a draft rigging for railway cars, the combination of a draw-bar, a strap yoke secured in a horizontal position to
55 said draw-bar with its ends against the vertical sides of the same, stop castings having their vertical side edges grooved for the limbs of the yoke, followers in said stop castings, and a spring between said followers,—said stop castings, followers and springs being accessible from beneath through the open under side of the horizontal yoke, substantially as set forth."

Your petitioner therefore represents that Mitchell shows that Byers was not, as the court conceives the fact to be, the first to include followers wholly within the vertical lines of a horizontal yoke and to provide lugs extending horizontally across or into the vertical lines of the plane of the yoke to constitute stops for such followers; and, moreover, your petitioner shows that if separate and independent stop castings are to be regarded as a "pocket" member in the sense of the Byers patent, then the Mitchell patent fully discloses the entire combination recited in claim 3 of the Byers patent, which claim merely calls for a draft rigging having the following features, namely; (1) "a pocket," (2) "lugs extending horizontally across the pocket at the upper and lower portions thereof respectively," (3) "followers within the pocket which bear against the lugs," and (4) "a yoke which extends within the pocket between the lugs and around the rear follower."

Your petitioner believes that, in view of the fact that the prior art actually shows that Byers is not entitled to the distinction of

having been the conceiver of the broad idea accredited to him by the court, it, should, in furtherance of justice, be permitted on such terms as the court may deem reasonable to put the Mitchell patent in evidence.

Your petitioner also shows that the so-called commercial device of Byers, mentioned in the opinion of the Court (pp. 10-11) as evidencing a conception by Byers of the idea of extending stop-
lugs into the vertical plane of, but not across, the yoke, is
56 not Byers' conception, but is the conception patented as a
concrete thing to Emerick, and the attention of the Court is requested to pages 186 and 189 of Volume II of the record, which show that the so-called Byers commercial device was the infringing structure in a suit brought in the District Court of the United States for the Northern District of Illinois, Eastern Division, by the defendant in this cause against W. H. Miner, who sells (Rec., Vol. II, p. 187) the so-called Byers commercial device; and your petitioner shows that in that suit, namely, The T. H. Symington Company v. W. H. Miner, the United States Circuit Court of Appeals for the Seventh Circuit, in determining the principal issue necessary to be determined in that suit, namely, the inventorship of the so-called Byers commercial device, held that that device was not the device of the Byers patent, but was a different invention patented by the Emerick patent, and was an infringement of all of the claims of the Emerick patent.

VI. In its opinion the court states (p. 7):

"It would (in Frost) be necessary to first remove the spring, then turn the followers to a position in which their arms would be lengthwise of the yoke before they could be removed. This surely is not the solution of the problem of free removability presented by Byers."

And again at page 9:

"While the followers in the Frost patent are removable from below without disengaging the yoke from the draw-bar, they are not as readily or easily removed as in Byers, and the extended arms on the followers of Frost were more likely to become broken as they could not be reinforced and strengthened as could the lugs in the Byers device."

(Here follow diagrams marked pp. 57 to 60.)

(No Model.)

A. E. MITCHELL.

DRAFT RIGGING FOR CARS.

No. 517,146. Patented Mar. 27, 1894.

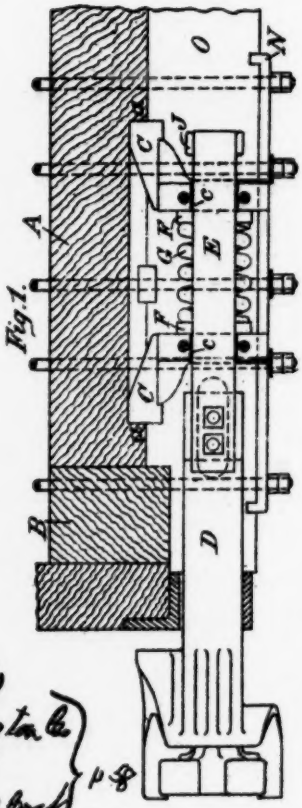

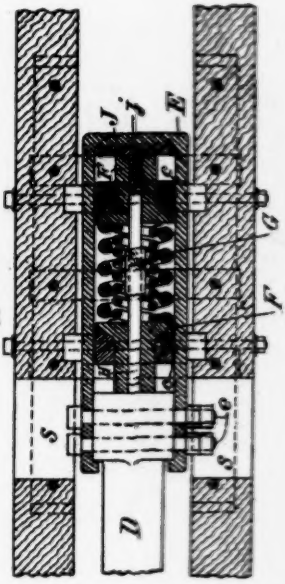

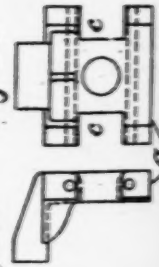

570

WITNESSES,
David Davies
J. C. Tinnes

INVENTOR,
Albert E. Mitchell
Per. Hall & Day
Attys.

X X

UNITED STATES PATENT OFFICE.

ALBERT E. MITCHELL, OF PASSAIC, NEW JERSEY, ASSIGNOR TO BEN PATTERSON, OF CLEVELAND, OHIO.

DRAFT-RIGGING FOR CARS.

SPECIFICATION forming part of Letters Patent No. 517,146, dated March 27, 1894.

Application filed October 6, 1893. Serial No. 487,343. (No model.)

To all whom it may concern:

Be it known that I, ALBERT E. MITCHELL, a citizen of the United States, and a resident of Passaic, county of Passaic, and State of New Jersey, have invented certain new and useful Improvements in Draft-Rigging for Railway-Cars, of which the following is a specification, the principle of the invention being herein explained and the best mode in which I have contemplated applying that principle, so as to distinguish it from other inventions.

In the annexed drawings—Figure 1 represents a longitudinal vertical section of a portion of the frame of a railway car, illustrating my improved draft rigging in side elevation; Fig. 2, a horizontal section of the same; Figs. 3^a, 3^b, and 3^c, respectively, a top view, a front view, and a side view of the block which fits in the inner end of the strap yoke, and Figs. 4^a and 4^b, respectively, a side view and a front view of one of the stop castings.

My improvement is illustrated as applied to the so-called "Graham draft rigging," but may be applied to other draft riggings in which a strap yoke is employed. A filling block, A, is secured between the center sills A', of the car frame, and abuts with its outer end against the end sill B, of the car frame. Stop castings, C, are secured between timbers, O, secured beneath the center sills, and have their abutting shoulders bearing against shoulders, *a*, formed in the filling block. Followers, F, fit and slide in the stop castings, and springs, G, fit between said followers, and bear against their opposed ends. All of the above parts are substantially the same as the corresponding parts in the Graham draft rigging, and perform substantially the same functions as said last-mentioned parts.

A pin, H, has a longitudinally movable fit in the axial bore of the followers, and has a thimble, H', upon its middle. Said pin and thimble serve to prevent lateral displacement of the springs. A drawbar, D, of any suitable or desired construction, is formed with two vertical shoulders, *d*, upon the sides of its shank, near the inner end of the same, and a strap yoke, E, is secured to the drawbar by means of bolts, *e*, or other suitable fastenings, having the lips at its free ends engaging the shoulders of the drawbar. The limbs of the strap yoke fit and have longitudinal play in grooves or slots, *c*, in the sides of the stop castings, and the inner end of the strap yoke bears against a block, J, which fills said end, and is preferably provided with lips bearing against the edges of the end. Said block is provided with a stud, *j*, which fits and has longitudinal play in the axial bore of the neck of the inner follower, against the end of which the block bears. The length of said stud *j*, is greater than the maximum compression of the springs, so that the block will not be displaced when the yoke is forced inward and the springs compressed. If desired, the conformation of the inner end of the yoke may be such that the block may be dispensed with, and the end of the yoke will bear directly against the inner follower. The timbers O beneath the center sills are formed with longitudinal slots, *s*, which register with the fastening bolts of the drawhead and strap yoke, and admit of said bolts being withdrawn, as well as admit of the heads and ends of the bolts having longitudinal play in the slots. As the strap yoke is secured to the drawhead in a horizontal position, the springs, followers and other parts of the draft rigging will be easily accessible for inspection, repairs, &c. This is a great advantage over draft riggings in which the strap yoke is secured in a vertical position, as in the latter position the lower limb of the strap yoke will cover the springs and other parts embraced within it, rendering such parts inaccessible excepting upon removal of the yoke.

Other modes of applying the principle of my invention may be employed for the mode herein explained. Change may therefore be made as regards the mechanism thus disclosed, provided the principles of construction set forth respectively in the following claims are employed.

I therefore particularly point out and distinctly claim as my invention—

1. In a draft rigging for railway cars, the combination with a drawbar formed with vertical and outwardly facing shoulders upon the vertical sides of its inner end, of a strap yoke having lips at its ends engaging said shoul-

X X

ders and secured with its ends to the drawbar, whereby the yoke will be in a horizontal position and free access to the interior of the yoke may be had from its open under side, substantially as set forth.

2. In a draft rigging for railway cars, the combination of a drawbar, a strap yoke secured in a horizontal position to said drawbar with its ends against the vertical sides of the same, stop castings having their vertical side edges grooved for the limbs of the yoke, followers in said stop castings, and a spring between said followers,—said stop castings, followers and spring being accessible from beneath through the open under side of the horizontal yoke, substantially as set forth.

3. In draft rigging for railway cars, the combination of a drawbar, a strap yoke secured in a horizontal position with its ends against the vertical sides of said drawbar, and stop castings cut out in their vertical sides for the passage of the limbs of said strap yoke,—the stop castings and the interior of the yoke being accessible from beneath through the open under side of the horizontal yoke, substantially as set forth.

4. In a draft rigging for railway cars, the combination of a drawbar, a strap yoke secured in a horizontal position with its ends to the vertical sides of said drawbar, a spring, a follower bearing against said spring, and a block fitting in the inner end of the strap yoke and bearing against the follower,—said spring, follower and block being accessible from beneath through the open under side of the horizontal yoke, substantially as set forth.

5. In a draft rigging for railway cars, a combination of parallel timbers having longitudinal horizontal slots, a drawbar between said timbers, and a strap yoke horizontally secured with its ends to the vertical sides of said drawbar, and having its fastenings registering with the horizontal slots in the timbers,—the interior of the yoke being accessible from the open under side of the same, the fastenings being accessible through the slots in the timbers, substantially as set forth.

6. In a draft rigging for railway cars, a combination of parallel timbers having longitudinal horizontal slots, a drawbar between said timbers, a strap yoke horizontally secured with its ends to the vertical sides of the drawbar, and bolts securing said yoke to the drawbar and having their heads and nuts ends projecting into and longitudinally movable within the horizontal slots of the timbers,—the interior of the yoke being accessible from the open under side of the same, the bolts and nuts being accessible through the slots in the timbers, substantially as set forth.

In testimony that I claim the foregoing to be my invention I have hereunto set my hand this 30th day of September, A. D. 1893.

ALBERT E. MITCHELL

Witnesses:
WM. SCHOFIELD,
MELVIN R. WILKIN.

XX

Your petitioner represents that the court is in error in re-
61 garding the subject-matter of the several claims of the Byers patent as differentiated from the Frost patent because of the comparative utility of the two devices in respect to the degree of ease with which their respective springs and followers may be removed. The same end or purpose, your petitioner represents, is accomplished in Frost as in Byers, namely, the removal of springs and followers independently of the draw-bar, and if there is a difference between them in respect to the ease of removability of their springs and followers, that difference is only a difference in degree and not a difference in kind or character: and your petitioner represents that the rule of decision of the United States Supreme Court, to the effect that a difference in degree from what has been attained or a more perfect result will not suffice to sustain a patent, should be recognized in this case; Smith v. Nichols, 88 U. S., 112; Guidet v. Brooklyn, 105 U. S., 550; Stephenson v. Brooklyn Crosstown R. R. Co., 114 U. S., 149; Burt v. Evory, 133 U. S., 349.

Your petitioner represents that the record does not warrant a finding that the followers of the Byers patent are in any substantial degree more easily removable than the H-shaped type of followers such as are employed in the Frost patent. Your petitioner avers that the followers of the Byers draft rigging are driven in and driven out by a sledge hammer, as is the case with other draft riggings employing rectangular followers (Rec. Vol. I, p. 151; p. 165), and avers that the court will find upon inspection of Plaintiffs' Exhibit No. 5 (which is the full sized draft rigging made in accordance with the drawings attached to the interrogatories) that the tops of the followers thereof are defaced and battered as a result of the heavy blows of the sledge; and your petitioner avers that there is no foundation or support in the record for the suggestion made by the
62 appellants' counsel, Mr. Neave, in his closing argument, to the effect that the springs and followers of the draft rigging of the Byers patent are lifted into position by the use of a lifting-jack, and may be quickly removed by passing a chain around or hooking a chain to the springs and followers and by then pulling downwardly on the chain by means of a jack. Your petitioner avers that, in making such suggestions, appellants' counsel, Mr. Neave, misapprehended the record; and your petitioner avers that it will be manifest to the court from an inspection of Plaintiffs' Exhibit No. 5 that the construction is such that a chain cannot be passed around or hooked to the springs and followers. If after inspection of Plaintiffs' Exhibit No. 5 any doubt remains in the mind of the court as to this matter, appellee requests that it be afforded the opportunity of establishing the facts.

Wherefore, your petitioner respectfully requests that a rehearing be granted in this cause, for the reasons above given, and that an order be entered affirming the decree of the court below and dismissing complainants' bill of complaint with costs to the defendant.

THE T. H. SYMINGTON COMPANY,
By GILBERT P. RITTER,
Counsel for Appellee.

I hereby certify that in my opinion the foregoing petition is well founded in point of law and in point of fact and is not interposed for delay.

GILBERT P. RITTER,
Counsel for Appellee.

63 In the United States Circuit Court of Appeals for the First Circuit, October Term, 1915.

No. 1147.

THE NATIONAL MALLEABLE CASTINGS COMPANY and JACOB J. BYERS, Plaintiffs, Appellants,

v.

THE T. H. SYMINGTON COMPANY, Defendant, Appellee.

Motion for Amendment of Decree.

Now comes the appellee, The T. H. Symington Company, by its counsel, Gilbert P. Ritter, and moves that the decree of this Court made and entered in the above-entitled cause on February 3, 1916, be amended so as to exclude therefrom the following directions to the United States District Court of the District of Maine, to wit:

1. The direction that the defendant be enjoined from further constructing or selling the stop-pieces referred to in the inter-

64 rogatories forming a part of the record in this case.

2. The direction for an accounting for the stop-pieces referred to in the interrogatories forming a part of the record in this case.

3. The direction for the award of costs to the complainant.

And it is further moved that the said decree of this Court be amended so as to confine the operation of the injunction therein directed to and only to the cheek-plates refrred to in the interrogatories forming a part of the record in this case when and only when such cheek-plates are combined or intended to be combined with other elements to complete the combinations claimed in claims three (3), five (5), and six (6) of the Byers patent No. 673,419.

And it is further moved that the complainants be required to file in the United States District Court for the District of Maine, within such time as this Court may deem reasonable, a certified copy of a disclaimer made in accordance with sections 4917 and 4922 of the Revised Statutes and disclaiming the subject-matter of claim eight (8) of the Byers patent in suit; and that in the absence of such disclaimer the bill of complaint be dismissed.

And it is further moved that the issuance of the mandate herein be stayed pending the determination of this motion.

And for cause the appellee shows that:

1. Claim 8 of the Byers patent in suit, which is the only claim relating to stop-pieces, was held by this court to be limited in scope

and not to be infringed by the defendant, and moreover, to be invalid because anticipated by the Hinson patent No. 635,322. There is, therefore, no foundation for ordering an injunction and an accounting in respect to the stop-pieces made and sold by the defendant.

2. The complainants herein, never having entered at the Patent Office a disclaimer of the subject-matter of invalid claim 8
65 of the Byers patent in suit, can recover no costs, section 973 of the Revised Statutes, which forbids the award of costs to the complainant, being as follows:

"When judgment or decree is rendered for the plaintiff or complainant, in any suit at law or in equity, for the infringement of a part of a patent, in which it appears that the patentee, in his specification, claimed to be the original and first inventor or discoverer of any material or substantial part of the thing patented, of which he was not the original and first inventor, no costs shall be recovered, unless the proper disclaimer, as provided by the patent laws (§4917 R. S.), has been entered at the Patent Office before the suit was brought."

3. Claims 3, 5 and 6 of the Byers patent, which are the only claims held by this Court to be valid and infringed, are combination claims. None of them is for a pocket member or for cheek-plates as separate articles of manufacture. Each of them is for a combination of several parts or elements, and the pocket is but one element of the respective combinations. The combinations are claimed in claims 3, 5 and 6, and not the separate elements; and, therefore, the unqualified direction to the District Court that the defendant be enjoined from making or selling its cheek-plates should be qualified so as to confine the operation of the injunction to the cheek-plates referred to in the interrogatories when, and only when, such cheek-plates are combined or intended to be combined with other parts to complete the combinations claimed in claims 3, 5 and 6 of the Byers patent.

4. Section 4922 of the Revised Statutes provides that when a patentee, without fraudulent intent, has claimed more than he has actually invented, he may, nevertheless, maintain a suit at
66 law or in equity for the infringement of any part of the thing patented which was bona fide his own, if it be itself a patentable invention and separable from the matter falsely claimed, provided that the plaintiff claiming under such patent shall not unreasonably neglect or delay to amend the patent by entering a disclaimer to the subject matter falsely claimed. The complainants' right to maintain the suit at all is conditioned on the filing of a proper disclaimer (§4917 R. S.) of claim 8 of the Byers patent, if the right to amend the patent by disclaimer has not already been forfeited by unreasonable delay.

Section 4922 of the Revised Statutes reads:

"Whenever, through inadvertence, accident, or mistake, and without any willful default or intent to defraud or mislead the public, a patentee has, in his specification, claimed to be the original and first inventor or discoverer of any material or substantial part of the thing patented, of which he was not the original and first inventor or dis-

coverer, every such patentee, his executors, administrators, and assigns, whether of the whole or any sectional interest in the patent, may maintain a suit at law or in equity, for the infringement of any part thereof, which was bona fide his own, if it is a material and substantial part of the thing patented, and definitely distinguishable from the parts claimed without right, notwithstanding the specifications may embrace more than that of which the patentee was the first inventor or discoverer. But in every such case in which a judgment or decree shall be rendered for the plaintiff, no costs shall be recovered unless the proper disclaimer has been entered at the Patent Office before the commencement of the suit. But no patentee shall be entitled to the benefits of this section if he has unreasonably neglected or delayed to enter a disclaimer."

67 & 68 Wherefore the appellee prays that its motion for the amendment of the said decree of this Court may be granted, and that the issuance of the mandate may be stayed pending the determination of the motion.

THE T. H. SYMINGTON COMPANY,
By GILBERT P. RITTER,
Counsel for Appellee.

69 United States Circuit Court of Appeals for the First Circuit, October Term, 1915.

No. 1147.

THE NATIONAL MALLEABLE CASTINGS COMPANY et al., Plaintiffs, Appellants,

v.

THE T. H. SYMINGTON COMPANY, Defendant, Appellee.

Before Putnam, Dodge, and Bingham, JJ.

June 8, 1916.

Per CURIAM:

The opinion was passed down in this case on February 3, 1916, finding infringements of claims 3, 5 and 6, the decree remanding the case to the District Court with directions enjoining the defendants as stated in the decree. No order was directed with reference to the other claims, which were numerous. The judgment to be entered should, of course, dismiss the bill with reference to those other claims.

Various other supplemental matters have been brought to our attention, and further relief requested with reference thereto.

It is maintained by the defendant that this court should grant some relief with reference to claims other than claims 3, 5 and 6, as said to be required by sections 4917 and 4922 of the Revised Statutes, relieving the defendant from payment of costs, on account

of the apparent finding of this court favorably to the respond-
70 ent on the various other claims. There was no finding or decree of the District Court as contemplated by the sections referred to; therefore, as the infringements of the sections thus referred to were never brought to our attention on appeal by any plea of proof, we have no jurisdiction with reference to the matter of costs by reason of anything provided in those sections.

A petition for rehearing has been filed; but the court gave unusual attention to the merits of the case, and it finds nothing in that petition which requires its attention.

Our judgment found that the respondent had infringed the claims enumerated in the judgment, but made no finding with reference to the other claims as it should have done; therefore, we will make proper correction with reference thereto.

The respondent on appeal also justly claims that the proposed judgment should be amended as stated herein.

The decree entered on the third day of February, 1916, is annulled, and in lieu thereof is entered the following decree:—

We adjudge and decide that claims 3, 5 and 6 of the plaintiff's patent are valid and infringed; and the decree of the District Court is reversed. We also find that the remaining claims in the complainant's patent are either not infringed or are invalid; the case is remanded to the District Court with directions to enjoin the respondent from further constructing, using or selling the cheek-plates (referred to in the interrogatories and made a part of the record in this case) when combined, or adapted to be combined, in the structures of claims 3, 5 and 6; and also for an accounting in reference to all such combinations, and for the costs in the District Court and on this appeal.

The petition for rehearing is denied.

71 On October 21 and 22, 1915, this cause came on to be heard, and was fully heard by the court, Honorable William L. Putnam, Honorable Frederic Dodge and Honorable George H. Bingham, Circuit Judges, sitting.

Thereafter, to wit, on the third day of February, A. D. 1916, the Opinion of the Court (page 33) was announced, and the following Final Decree was entered:—

Final Decree.

February 3, 1916.

This case came on to be heard October 21 and 22, 1915, upon the transcript of record of the District Court of the United States for the District of Maine, and was argued by counsel.

On consideration whereof, It is now, to wit, February 3, 1916, here ordered, adjudged and decreed as follows: The decree of the District Court is reversed, and the case is remanded to that court, with directions to enjoin the defendant from further constructing or selling the stop-pieces and cheek-plates referred to in the inter-

rogatories made a part of the record in this case, for an accounting, and for costs in the District Court and on this appeal.

By the Court.

FRANCIS M. FOGARTY, *Clerk.*

Thereafter, to wit, on the twenty-sixth day of February, 1916, a Petition for Rehearing (page 45) was filed by the appellee.

Thereafter, to wit, on the twenty-ninth day of February, 1916, the following Order of Court was entered:—

Order of Court.

February 29, 1916.

Leave is granted appellee to file a motion for amendment of decree, and brief in support thereof, and to appellants to file a brief in opposition thereto.

By the Court.

FRANCIS M. FOGARTY, *Clerk.*

72 On the same day, to wit, February 29, 1916, the Motion for Amendment of Decree (page 63) was filed, and came on to be heard before Honorable William L. Putnam and Honorable Frederic Dodge.

Thereafter, to wit, on the eighth day of June, A. D. 1916, the following Order of Court was entered:—

Order of Court.

June 8, 1916.

The court having fully considered the petition for rehearing filed by the appellee on February 26, 1916, and no judge who concurred in the judgment entered February 3, 1916, desiring that the case be reargued, It is ordered that the petition for rehearing filed on February 26, 1916, be, and the same hereby is, denied.

By the Court.

FRANCIS M. FOGARTY, *Clerk.*

On the same day, to wit, June 8, 1916, the Per Curiam (page 69) was announced, and the following Order of Court was entered:—

Order of Court.

June 8, 1916.

It is ordered that the decree entered on the third day of February, 1916, is annulled, and in lieu thereof is entered the follow-

ing decree: We adjudge and decide that claims 3, 5 and 6 of the plaintiff's patent are valid and infringed; and the decree of the District Court is reversed. We also find that the remaining claims in the complainant's patent are either not infringed or are invalid; the case is remanded to the District Court, with directions to enjoin the respondent from further constructing, using or selling the cheek-plates (referred to in the interrogatories and made a part of the record in this case) when combined, or adapted to be combined, in the structures of claims 3, 5 and 6; and also for an accounting in reference to all such combinations; and for the costs of the District Court and on this appeal.

By the Court.

FRANCIS M. FOGARTY, *Clerk.*

73 Thereafter, to wit, on the fifteenth day of June, A. D. 1916, the following Motion for Stay of Issue of Mandate was filed by the appellee:—

Motion for Stay of Issue of Mandate.

[Filed June 15, 1916.]

Now comes the appellee, and moves this Honorable Court that the issue of the mandate in the above-entitled cause be stayed pending the determination by the Supreme Court of the United States of appellee's petition for a writ of certiorari.

GEO. K. WOODWORTH,
Of Counsel.

On the same day, to wit, June 15, 1916, the following Order of Court was entered:—

Order of Court.

June 8, 1916.

Upon motion of appellee, It is ordered that mandate herein be stayed one calendar month.

By the Court.

FRANCIS M. FOGARTY, *Clerk,*
By ARTHUR I. CHARRON,
Deputy Clerk.

74 United States Circuit Court of Appeals for the First Circuit.

No. 1147.

THE NATIONAL MALLEABLE CASTINGS COMPANY et al., Plaintiffs, Appellants,

v.

THE T. H. SYMINGTON COMPANY, Defendant, Appellee.

Clerk's Certificate.

I, Arthur I. Charron, Clerk of the United States Circuit Court of Appeals for the First Circuit, certify that the three volumes, entitled in the above cause, namely:—

Volume I, Plaintiffs' Record;
Volume II, Defendant's Record;
Volume III, Proceedings in District Court;

this certificate being attached to each of said three volumes, contain and are a true copy of the record in said cause in said court.

In testimony whereof, I hereunto set my hand and affix the seal of said United States Circuit Court of Appeals for the First Circuit, at Boston, in said First Circuit, this first day of July, A. D. 1916.

[Seal United States Circuit Court of Appeals, First Circuit.]

ARTHUR I. CHARRON, *Clerk.*

[United States internal revenue documentary stamp, series of 1914, ten cents, canceled July 1, 1916. A. I. C.]

75 UNITED STATES OF AMERICA, *ss:*

[Seal of the Supreme Court of the United States.]

The President of the United States of America to the Honorable the Judges of the United States Circuit Court of Appeals for the First Circuit, Greeting:

Being informed that there is now pending before you a suit in which The National Malleable Castings Company et al. are appellants, and The T. H. Symington Company is appellee, No. 1147, which suit was removed into the said Circuit Court of Appeals by virtue of an appeal from the District Court of the United States for the District of Maine, and we, being willing for certain reasons that the said cause and the record and proceedings therein should be certified by the said Circuit Court of Appeals and removed into
76 the Supreme Court of the United States, Do hereby command you that you send without delay to the said Supreme

Court, as aforesaid, the record and proceedings in said cause, so that the said Supreme Court may act thereon as of right and according to law ought to be done.

Witness the Honorable Edward D. White, Chief Justice of the United States, the twentieth day of October, in the year of our Lord one thousand nine hundred and sixteen.

JAMES D. MAHER,
Clerk of the Supreme Court of the United States.

[Endorsed:] File No. 25400. Supreme Court of the United States. No. 570, October Term, 1916. The T. H. Symington Company vs. The National Malleable Castings Company et al. Writ of Certiorari.

77 *Return on Writ of Certiorari.*

United States Circuit Court of Appeals for the First Circuit.

And now here the Judges of the United States Circuit Court of Appeals for the First Circuit make return of this writ by annexing hereto and sending herewith a stipulation between counsel for the respective parties in the cause in the Supreme Court of the United States wherein this writ of certiorari issued, "that the certified transcript of the record herein on file in the office of the Clerk of the Supreme Court of the United States in the matter of The National Malleable Castings Company, et al., Appellants, vs. The T. H. Symington Company, Appellee, and there numbered 1147 (October Term, 1915) upon the docket of said court, may be taken as a return by this court to the writ of certiorari issued by the Supreme Court of the United States in the said case."

In testimony whereof, I, Arthur I. Charron, Clerk of said United States Circuit Court of Appeals for the First Circuit hereto set my hand and affix the seal of said court at Boston, in said First Circuit, this ninth day of December, A. D. 1916.

[Seal United States Circuit Court of Appeals, First Circuit.]

ARTHUR I. CHARRON, *Clerk.*

78 United States Circuit Court of Appeals for the First Circuit.

No. 1147.

THE NATIONAL MALLEABLE CASTINGS COMPANY et al., Appellants,

v.

THE T. H. SYMINGTON COMPANY, Appellees.

Stipulation.

(Filed December 9, 1916.)

In the above-entitled action it is hereby stipulated that the certified transcript of the record herein on file in the office of the Clerk of the Supreme Court of the United States in the matter of the National Malleable Castings Company, et al., Appellants, vs. The T. H. Symington Company, Appellee, and there numbered 1147 (October Term, 1915) upon the docket of said court, may be taken as a return by this court to the writ of certiorari issued by the Supreme Court of the United States in the said cause.

CHARLES NEAVE,
CLARENCE D. KERR,
Solicitors for Appellant.
MELVILLE CHURCH,
GILBERT P. RITTER,
Solicitors for Appellee.

A true copy.

Attest:

[Seal United States Circuit Court of Appeals, First Circuit.]

ARTHUR I. CHARRON, *Clerk.*

79 [Endorsed:] File No. 25,400. Supreme Court U. S., October Term, 1916. Term No. 570. T. H. Symington Co., petitioner, vs. The Nat'l Malleable Castings Co. et al. Writ of Certiorari and return. Filed Dec. 12, 1916.

IN THE

Supreme Court of the United States

October Term, A. D. 1916.

In the Matter of the Application of The T. H. Symington Company for the Writ of Certiorari under Section 6 of the Act of Congress Approved March 3, 1891, Creating the Circuit Courts of Appeal.

THE T. H. SYMINGTON COMPANY, *Petitioner,*

vs.

THE NATIONAL MALLEABLE CASTINGS COMPANY and J. J. BYERS, *Respondents.*

ON PETITION FOR WRIT OF CERTIORARI DIRECTED TO THE UNITED STATES CIRCUIT COURT OF APPEALS FOR THE FIRST CIRCUIT.

To Charles Neave and Clarence D. Kerr, counsel for the above mentioned respondents; and to the above mentioned respondents:

Please take notice that on the 9th day of October, 1916, upon the opening of the court or as soon thereafter as counsel may be heard, at the courtroom, in the City of Washington, D. C., we shall present to the court the accompanying petition for the issuance of the writ of *certiorari* to be directed to the United States Circuit Court of Appeals for the First Circuit, and shall ask that permission be given to file said petition and that the writ of *certiorari* be issued as in the said petition prayed.

MELVILLE CHURCH,
GILBERT P. RITTER,
Counsel for the Petitioner.

Service of notice and a copy of the
written petition admitted this 10th d
of July, 1916.

(Signed) Clarence D. Ke
Counsel for Respon

IN THE

Supreme Court of the United States

October Term, A. D. 1916.

In the Matter of the Application of The T. H. Symington Company for the Writ of Certiorari under Section 6 of the Act of Congress Approved March 3, 1891, Creating the Circuit Courts of Appeal.

THE T. H. SYMINGTON COMPANY, *Petitioner,*

vs.

THE NATIONAL MALLEABLE CASTINGS COMPANY and J. J. BYERS, *Respondents.*

PETITION FOR A WRIT OF CERTIORARI, DIRECTED TO THE UNITED STATES CIRCUIT COURT OF APPEALS FOR THE FIRST CIRCUIT.

To the Honorable, The Chief Justice
and the Associate Justices of the
Supreme Court of the United States:

Your petitioner, The T. H. Symington Company, a corporation duly organized and existing under the laws of the State of Maine, respectfully represents, as follows:

First: Your petitioner sued William H. Miner for the infringement of patent to William H. Emerick, No. 693,643, granted February 18, 1902, for Draft Rigging for Cars, in the United States District Court for the Northern District of Illinois, Eastern Division, the bill of complaint having been filed on the 1st day of March, 1912.

Upon the trial of the cause, the District Court, Sanborn, D. J., held all of the claims of the Emerick patent valid and infringed, and also held that the proofs presented carried the date of Emerick's invention back of the *issue date* of the Byers patent, No. 673,419, which patent was pleaded in defense in the answer as a *prior patent* only. The Court of Appeals for the Seventh Circuit, on appeal by defendant, affirmed the decree, denied a petition for rehearing, and denied a motion to amend the answer so as to set up the patentee Byers as a *prior inventor;* said motion having been denied for the reason that the said Circuit Court of Appeals held the Byers structure would not anticipate the Emerick patent, no matter how pleaded.

Second: Your petitioner as the manufacturer and seller of certain draft rigging parts for railway cars, to wit, cheek-plates and spacer-blocks, was sued in the United States District Court for the District of Maine by the National Malleable Castings Company and J. J. Byers, the joint owners of the said Byers patent No. 673,419, *supra,* for infringement of certain claims thereof, to wit (Claims 1, 2, 3, 5, 6, 7, 8, and 10), the bill of complaint having been filed on October 30, 1913.

Your petitioner in said last mentioned suit pleaded non-infringement of said Byers patent, and also pleaded as a further defense that the patentee, Emerick, for the infringement of whose patent No. 693,643, *supra,* the party Miner had been sued in the Seventh Circuit, as aforesaid, had invented his specific improvement in draft rigging before the

inventor Byers had made the specific improvement disclosed in his patent.

The said cause brought in the District Court of Maine, as aforesaid, came on to be heard before Hale, D. J., who dismissed the bill, holding that the claims were not infringed and that they must be narrowly construed to sustain their validity. The plaintiff appealed, and the Court of Appeals for the First Circuit reversed the decree of the District Court in part, erroneously holding claims 3, 5 and 6, of said Byers patent to be valid and infringed. The said Circuit Court of Appeals for the First Circuit further held that the evidence presented in support of the defense of Emerick's prior invention was not sufficient to anticipate the Byers patent. A petition for rehearing was filed by your petitioner and, on June 8, 1916, was denied.

Third: On or about May 22, 1916, the said William H. Miner filed in this court a petition for a writ of *certiorari* directed to the United States Circuit Court of Appeals for the seventh Circuit in the said case of William H. Miner v. The T. H. Symington Company, and in his petition alleged in substance:

> (a) A conflict of decisions between the Circuit Court of Appeals for the Seventh Circuit and the Circuit Court of Appeals for the First Circuit in the suits hereinabove mentioned, regarding the Emerick patent and the Byers patent.
>
> (b) That the substantial questions litigated in each of said suits were (1), Which of said patentees, Emerick or Byers, was first in point of time of invention, and (2) were the inventions the same, or distinguishable from each other?
>
> (c) That the Circuit Court of Appeals for the Seventh Circuit held that Emerick was the first inventor, while the Circuit Court of Appeals for the First Circuit held Byers to be the first inventor.
>
> (d) That the Circuit Court of Appeals for the Sev-

enth Circuit held that the structures of said patents were distinguishable, and the Circuit Court of Appeals for the First Circuit held that the inventions were not distinguishable.

(e) That the Circuit Courts of Appeals for the Seventh and the First Circuits arrived at different conclusions as to the respective dates of invention from the testimony of the same witnesses.

(f) That the Circuit Court of Appeals for the Seventh Circuit held mere conception without reduction to practice or diligence to reduce to practice constituted invention in the sense of the patent law, while the Circuit Court of Appeals for the First Circuit held such evidence insufficient to anticipate the Byers patent.

(g) That the Circuit Court of Appeals for the Seventh Circuit held Byers' integral box housing patentably different from the independent counterpart cheek-plates of Emerick, and that Byers never contemplated separate cheek-plates, while the Circuit Court of Appeals for the First Circuit held exactly the contrary.

Fourth: This Court, on the 5th day of June, 1916, granted the said petition of William H. Miner for a writ of *certiorari* directed to the Circuit Court of Appeals for the Seventh Circuit, and since the only allegations in the petition were allegations as to the alleged conflict between the decisions, of the Circuit Courts of Appeal for the Seventh and the First Circuits, it is believed that your petitioner may properly infer therefrom that this Court in granting the petition tentatively held that a conflict did exist between said two decisions.

Fifth: Therefore, your petitioner, without admitting the conflict between the said decisions of the said Circuit Court of Appeals for the Seventh Circuit and the said Circuit Court of Appeals for the First Circuit, but denying the same, and asserting that the decree of said Circuit Court of

Appeals for the First Circuit was erroneous and should be reversed, now prays that this Court issue its writ of *certiorari* directed to the said Circuit Court of Appeals for the First Circuit, requiring said last named Court to certify to this Court the record in the said case of National Malleable Castings Company and J. J. Beyers, Plaintiffs-Appellants vs. The T. H. Symington Company, Defendant-Appellee, No. 1147, in order that both said cases may be before this Court when the final determination of actual conflict between said cases and of the rights of the respective parties thereto, comes up for adjudication by this Court, and that the decree of said Circuit Court of Appeals for the First Circuit be revised and reversed.

THE T. H. SYMINGTON COMPANY,
By WILLIAM G. HOFFMAN, JR.,
Treasurer.
Petitioner.

City of Baltimore, State of Maryland, ss.

William G. Hoffman, Jr., being duly sworn, deposes and says that he is the treasurer of The T. H. Symington Company, the petitioner named in the foregoing petition; that he has read the said petition by him subscribed in behalf of The T. H. Symington Company and knows the contents thereof; that the same is true of his own knowledge except as to matters and things stated therein to be on information and belief, and as to those matters he verily believes it to be true.

WILLIAM G. HOFFMAN, JR.

Subscribed and sworn to before me this 7th day of July, 1916.

(signed) Elizabeth Richardson
Notary Public.

Seal

We hereby certify that we have examined and read the foregoing petition for a writ of *certiorari* and that in our opinion such petition is well founded and should be granted, and that such petition is not filed for delay.

MELVILLE CHURCH,
GILBERT RITTER. . . . .

Date, July 8., 1916.

Office Supreme Court, U. S.
FILED
NOV 1 1917
JAMES D. MAHER

IN THE

Supreme Court of the United States

OCTOBER TERM, 1917.

No. [redacted]31

THE T. H. SYMINGTON COMPANY, *Petitioner,*

vs.

THE NATIONAL MALLEABLE CASTINGS COMPANY, AND J. J. BYERS, *Respondents.*

MOTION TO ADVANCE HEARING.

MELVILLE CHURCH,
Counsel for Petitioner.

PRESS OF BYRON S. ADAMS, WASHINGTON, D. C.

IN THE

Supreme Court of the United States

OCTOBER TERM, 1917.

No. 226.

THE T. H. SYMINGTON COMPANY, *Petitioner,*

vs.

THE NATIONAL MALLEABLE CASTINGS COMPANY, AND J. J. BYERS, *Respondents.*

NOTICE.

Charles Neave, Esq.,
Clarence D. Kerr, Esq.,
5 Nassau Street, New York, N. Y.,
Counsel for Respondents.

Gentlemen:

Take notice that on Monday, the 5th day of November, 1917, at the opening of the Court on that day, or as soon thereafter as counsel may be heard, I shall submit the accompanying motion to advance the hear-

ing of this case so that it may be heard concurrently with the case of William H. Miner vs. The T. H. Symington Company, No. 170, October Term, 1917, for reasons set forth in the statement accompanying said motion.

MELVILLE CHURCH,
Counsel for Petitioner.

Service acknowledged this 29th day of October, 1917.

CHARLES NEAVE,
Counsel for Respondents.

IN THE

Supreme Court of the United States

OCTOBER TERM, 1917.

No. 226.

THE T. H. SYMINGTON COMPANY, *Petitioner,*
vs.
THE NATIONAL MALLEABLE CASTINGS COMPANY, AND
J. J. BYERS, *Respondents.*

MOTION.

And now comes The T. H. Symington Company, petitioner, by Melville Church, its counsel, and moves that this case be advanced for hearing so that it may be concurrently heard with the case of William H. Miner vs. The T. H. Symington Company, No. 170, October Term, 1917, involving the same questions.

STATEMENT.

In the case of William H. Miner, petitioner, vs. The T. H. Symington Company, respondent, No. 170,

an application for *certiorari* was made to this Court based upon the alleged conflict between the decision of the Court of Appeals for the Seventh Circuit in that case and the decision of the Court of Appeals for the First Circuit, in the instant case. The *certiorari* was granted June 5, 1916.

In the instant case, the application for *certiorari* was also made because of the same supposed conflict of decisions. This application was granted October 16, 1916.

It appearing that the same questions must of necessity be argued in both cases, and that the time of the Court will be economized by having both cases heard together, this application for the advance of the instant case for hearing with case No. 170, which occupies a higher place on the docket, is made.

MELVILLE CHURCH,
Counsel for Petitioner.

Office Supreme Court, U. S.
FILED
JAN 12 1918
JAMES D. MAHER;
CLERK.

IN THE

Supreme Court of the United States

OCTOBER TERM, 1917.

No. [redacted]31

THE T. H. SYMINGTON COMPANY, *Petitioner*,

vs.

THE NATIONAL MALLEABLE CASTINGS COMPANY AND J. J. BYERS.

ON WRIT OF CERTIORARI TO THE UNITED STATES CIRCUIT COURT OF APPEALS FOR THE FIRST CIRCUIT.

BRIEF FOR PETITIONER, THE T. H. SYMINGTON COMPANY.

MELVILLE CHURCH,
GILBERT P. RITTER,
W. S. SYMINGTON, JR.,
ERNEST F. MECHLIN,
Counsel for Petitioner.

PRESS OF BYRON S. ADAMS, WASHINGTON, D. C.

SUBJECT INDEX.

	Page
Statement of the case	1-8
The proceedings in the District Court	2
Judge Hale's opinion in the District Court	2-3
The opinion of the Court of Appeals	3-4
The petition for a rehearing	4
The motion for amendment of decree	4-5
The petition for the writ of *certiorari*	5-6
Assignment of errors	6-7
The relation of this case to that of Symington Co. v. Miner	7-9
The same draft-rigging complained of in both cases	7
The National Malleable Castings Co. made the draft-rigging Miner sold	8
Argument	8-55
What draft-rigging is	9
Draft-rigging art is old and crowded	10
The fundamental combination common to draft-riggings explained (Frost Patents)	10-13
"Horizontal" yoke type of draft-rigging is old	13-14
What Byers did	14-18
What Emerick, the inventor of defendant's draft-rigging, did	16-18
The Byers patent	19-21
The claims alleged to be infringed	22-25
Group I: claims 1, 2 and 10	22-24
Group II: claim 8	24
Group III: claims 3, 5, 6 and 7	25
The alleged infringement	26-28
Defendant's cheek-plate (sketch)	27
Defendant's spacer-block (sketch)	27
Alleged infringing rigging of Boston & Maine Railroad (sketches)	28
Claims 1, 2 and 10 not infringed	29-32
What contributory infringement is (authorities)	29-30
Infringement can not be made out by reading elements into claims (authorities)	31-32
Claims 1, 2 and 10 are invalid	32-42
The Frost patents	32-35
The common spring arrangements of draft-riggings (Pilcher patent No. 616,965)	33-34

Page

The Simons patent No. 627,540..... 35
The erroneous holding by the Court of Appeals that claims 1, 2, 3, 5, 6 and 10 contemplate followers *rectangular* in shape 36-42
The Court of Appeals was in error in saying the followers were *described* as rectangular..... 38
The Court of Appeals erred in applying the phrase "substantially as described" as qualifying the word "follower" alone 39-40
Effect of proceedings in Patent Office on interpretation of the term "follower" 39-41
The Court of Appeals erroneously held that Byers was differentiated from the Frost patents because of supposed greater ease in removing the springs and followers 41-42

Claim 8 42-46
Both lower courts held claim 8 not infringed and invalid 42-43
Claim 8 not infringed 43-44
Claim 8 invalid 44-46
Perry patent No. 228,385 45
Hinson patent No. 635,322..... 45

Claims 3, 5, 6 and 7 not infringed.....46-55
The basis of the erroneous holding that Byers patent contemplates cheek-plates 46-47
The pocket is not cheek-plates.....47-49
The prior art prevents the Byers patent from having the broad interpretation the Court of Appeals accorded it 49-50
Plaintiffs' plan of discriminating between features of the Byers pocket 50-52
The plaintiffs' first theory of infringement proposes cutting the pocket into three pieces and discarding the middle part 52-54
The plaintiffs' second theory of infringement brings in the car sills and attached spring guides to make up the pocket.....54-55

Conclusion 55-58
(1) The question of priority between Byers and Emerick is secondary 55
(2) Plaintiffs have put forward a false test of infringement 55-56

Page

(3) Testimony confusing the Byers invention with other things 56
(4) The key connection of the American continuous drawbar system 56-58

LIST OF CASES.

Cited at Page

Ball & Socket Fastener Company v. Kraetzer, 150 U. S., 111 52
Bates v. Coe, 98 U. S., 31 56
Bullock Electric & Mfg. Co. v. Westinghouse Electric & Mfg. Co., 129 F. R., 105..... 30
Burt v. Evory, 133 U. S., 349..... 42
Canda v. Michigan Malleable Iron Co., 124 F. R., 486.. 29
Edge-Setter Co. v. Keith, 139 U. S., 530..... 52
Fastener Co. v. Kraetzer, 150 U. S., 111..... 52
Guidet v. Brooklyn, 105 U. S., 550..... 42
Hubbell v. United States, 179 U. S., 80..... 41
Leeds & Catlin Co. v Victor, 213 U. S., 325..... 29
McCarthy v. Lehigh Valley R. Co., 160 U. S., 110..... 32
McClain v. Ortmayer, 141 U. S., 419..... 31
Morgan Envelope Co. v. Albany Paper Co., 152 U. S., 429 41
National Tube Co. v. Mark, *et al.*, 216 F. R., 507..... 39
Peters v. Hanson, 129 U. S., 541..... 34
Railroad Supply Co. v. Elyria Iron & Steel Co., 242 U. S., 609 42
Robinson on Patents, Vol. 2, Sec. 505..... 29
Roemer v. Peddie, 132 U. S., 317..... 41
Sickles v. Gloucester, 4 Blatch., 229; Fed. Cas., 12841.... 56
Smith v. Nichols, 88 U. S., 112..... 42
Stearns & Co. v. Russell, 85 F. R., 218..... 32
Stephenson v. Brooklyn Crosstown R. R. Co., 114 U. S., 149 42
Thompson-Houston Electric Co. v. Ohio Brass Co., 80 F. R., 712 .....29, 30
Symington Co. v. William H. Miner, 216 F. R., 198 (D. C.) 5, 7
Symington Co. v. William H. Miner, 229 F. R., 731 (C. C. A.) 5, 7
Universal Draft Gear Co. & Nash v. Miner, 245 F. R., 349 10
Woodbury Planing Machine Co. v. Keith, 101 U. S., 479.. 34

IN THE

Supreme Court of the United States

OCTOBER TERM, 1917.

No. 226.

THE T. H. SYMINGTON COMPANY, *Petitioner,*

vs.

THE NATIONAL MALLEABLE CASTINGS COMPANY AND J. J. BYERS.

ON WRIT OF CERTIORARI TO THE UNITED STATES CIRCUIT COURT OF APPEALS FOR THE FIRST CIRCUIT.

BRIEF FOR PETITIONER, THE T. H. SYMINGTON COMPANY.

I.

STATEMENT OF THE CASE.

This case comes before the Court on a writ of *certiorari* directed to the United States Circuit Court of Appeals for the First Circuit, which, on June 8, 1916, entered a decree (p. 368) reversing the decree of the District Court for the District of Maine to the extent of adjudging claims 3, 5

and 6 of the plaintiffs-respondents' patent to be valid and infringed.

The decree of the District Court was entered in a suit in equity brought by The National Malleable Castings Company and Jacob J. Byers against The T. H. Symington Company, a corporation of Maine, for infringement of the J. J. Byers patent (p. 4) No. 673,419, granted May 7, 1901, for Improvement in Draft-Riggings. The bill of complaint (p. 1) contained the usual averments concerning the grant of the patent and its ownership by the plaintiffs, and charged that the defendant had contributorily infringed claims 1, 2, 3, 5, 6, 7, 8 and 10 by selling or contracting to sell to the Pressed Steel Car Company for use on cars for the Boston & Maine Railroad certain draft rigging parts (viz., cheek-casting and spacer blocks, which will be described later) intended and designed to be used with other parts to form the combinations specified in the claims. By its answer (p. 153) the petitioner, hereinafter called the defendant, denied the validity of the patent and averred that the alleged infringing draft gears made by the defendant in accordance with the William H. Emerick patent (p. 318, No. 693,643, which it owned and under which it operated, did not infringe the Byers patent. The structures manufactured by the defendant and their relation to the draft rigging mechanism were identified and determined by certain interrogatories addressed by the plaintiffs to the defendant and answered by the latter (pp. 5-8).

The case came on to be heard before the Hon. Clarence Hale, District Judge, most of the testimony being taken in open court. In an opinion (p. 335) filed April 8, 1915, Judge Hale held that the idea of effecting free removability of the springs and followers of a draft rigging from below was not a new departure with Byers, but was old in the art, as shown by the Frost patents No. 510,854, issued in 1893, and No. 532,272, issued in 1895; that claims 1, 2 and

10, which were broad in scope and described a draft-rigging having the combination of a draw-bar, yoke, springs and followers, limited merely by the statement that the springs and followers are removable from below independently of the draw-bar, were lacking in novelty and were invalid because anticipated by the Frost patents before mentioned; that claim 8, relating to a special form of follower having a projecting stop (p. 337) for limiting the compression of the springs to prevent their being damaged or broken, was not infringed in view of the Perry patent No. 228,385, issued in 1880, and was invalid in view of the Hinson patent, No. 625,332, issued in 1899 (p. 339); that claims 3, 5, 6 and 7 were detail claims relating to a pocket member and that the alleged infringing structure was not constructed according to those detailed claims, because it had nothing which should be held to be the pocket or box constituting the leading feature of the Byers invention (pp. 341-42) recited in these claims. Accordingly the District Court, on May 24, 1915, entered a final decree (p. 334) dismissing plaintiffs' bill.

The plaintiffs appealed to the Circuit Court of Appeals for the First Circuit, assigning the following errors: First, that the District Court erred in dismissing the bill; second, that the Court erred in not holding the Byers patent valid and infringed as to claims 1, 2, 3, 5, 6, 7, 8 and 10; third, that the Court erred in not ordering an injunction and an accounting; and, fourth, that the Court erred in not ordering the defendant to pay the costs of the suit (p. 343).

On appeal, the Court of Appeals, in an opinion (p. 348) filed February 3, 1916, held that the District Court erred in finding that the prior art anticipated claims 1, 2 and 10, the broad claims, of the Byers patent (p. 353); but held, however, that the defendant infringed none of these claims because it did not furnish any element entering into them (p. 353). The Court of Appeals agreed with the District

Court that claim 7 was not infringed and that claim 8 not only was anticipated by the Hinson patent No. 635,322, October 24, 1899, but was not infringed; but, contrary to the holding of the District Court the Court of Appeals decided that claims 3, 5 and 6 were infringed (p. 355) and thereupon entered a final decree (p. 367) ordering that the decree of the District Court be reversed and the case remanded "with directions to enjoin the defendant from further constructing or selling stop-pieces and cheek-plates referred to in the interrogatories made a part of the record in this case for an accounting, and for costs in the District Court and on this appeal."

Thereafter, on February 26, 1916 (p. 368), the defendant petitioned for a rehearing (p. 356), alleging that the Court of Appeals, in order to differentiate the invention of the Byers patent from the prior art, had construed into the claims an element or structural feature not expressed in any of the claims, but conceived by the Court to be the very gist of the invention claimed in the Byers patent, namely, followers made in rectangular shape. This petition was denied (p. 368).

The defendant also filed a motion (p. 364) for amendment of the decree, urging (1) that it was error to direct that the defendant be enjoined from making or selling the stop-pieces referred to in the interrogatories, because the Court had held (p. 353) that claim 8 of the Byers patent (the only claim relating to stop-pieces) was not infringed and was invalid; (2) that for the same reason it was error to require the defendant to account for the stop-pieces; (3) that under the provisions of sections 973, 4917 and 4922 of the Revised Statutes the plaintiff could not recover costs, because the subject-matter of claim 8 had not been disclaimed and the Court had held that Byers was not the original inventor of the construction patented by that claim; and (4) that the decree ought not broadly to order that the

defendant be enjoined from making and selling the cheek-plates, but should confine the operation of the injunction to the cheek-plates when and only when they were combined or intended to be combined with other elements to form the combinations claimed in claims 3, 5 and 6, the only claims of the Byers patent No. 673,419 held to be infringed. The defendant also moved (p. 364) that within a reasonable time the plaintiffs be required to disclaim the subject-matter of claim 8, and that in the absence of such disclaimer the bill of complaint be dismised.

This motion was granted to the extent that (pp. 368-9) the directions that defendant be enjoined from making the stop-pieces and be required to account for profits and damages as to them were expunged, and the direction respecting the cheek-plates was modified to limit the scope of the injunction and the accounting to the cheek-plates when combined or adapted to be combined in the structures of claims 3, 5 and 6.

Following the decision of the Court of Appeals for The First Circuit, William H. Miner, who, in a suit brought against him by this defendant, The T. H. Symington Company, in the United States District Court for the Northern District of Illinois, Eastern Division, had been adjudged both by the District Court and the Court of Appeals for the Seventh Circuit to infringe the William H. Emerick patent (p. 318), No. 693,643) granted February 18, 1902, under which this defendant operates (p. 161), filed in this Court on May 18, 1916, a petition for a writ of *certiorari* directed to the Circuit Court of Appeals for the Seventh Circuit, alleging a conflict between the said decision of that Court and the decision of the Circuit Court of Appeals for the First Circuit herein. On the fifth day of June, 1916, Miner's petition for the writ of *certiorari was granted*. Thereafter, on July 11, 1916, this defendant, without admitting the

alleged conflict between the said decisions of the Circuit Court of Appeals for the Seventh Circuit and the Circuit Court of Appeals for the First Circuit, but denying the same and asserting that the decree of the Circuit Court of Appeals in this case was erroneous and should be reversed, prayed this Court to issue its writ of *certiorari* to the Circuit Court of Appeals for the First Circuit, in order that this case as well as the said case of Symington Co. vs. Miner might be before this Court when the final determination of actual conflict between these two cases and the rights of the respective parties thereto should be adjudicated, and that the decree of the Circuit Court of Appeals for the First Circuit might be revised and reversed. This, defendant's petition for the writ of *certiorari*, was granted October 16, 1916.

II

ASSIGNMENT OF ERRORS.

As the record in this case comes before the Court in obedience to a writ of *certiorari*, it contains no formal assignment of errors, but briefly stated the grounds upon which the decree of the Circuit Court of Appeals for the First Circuit should be revised and reversed are:

FIRST: That the Court of Appeals erred in holding that claims 1, 2, 3, 5, 6 and 10 of the Byers patent are to be so construed as to "contemplate followers *rectangular* in shape included entirely within the vertical lines of the yoke, with free removability from below" (p. 355), and that, as thus interpreted, said claims are not anticipated by the prior art and those numbered 3, 5 and 6 have been infringed.

SECOND: That the Court of Appeals erred in treating the phrase *"substantially as described,"* with which each claim concludes, as qualifying the word "followers" so as to import that the followers of the draft-rigging are required to have the structural characteristics "as described"

in the specification, and erred in not applying the established rule that the phrase *"substantially as described"* qualifies the *whole combination* of elements and does not qualify any one element or part recited in the claim in any further or different degree than it qualifies every element mentioned in the claim.

THIRD: That the Court of Appeals erred in finding that "the folower-plates of the plaintiff's device are *described* in the specifications as rectangular" (p. 352).

FOURTH: That the Court of Appeals erred in considering that the words "substantially as described" found at the end of each claim permitted certain details, shown but not described, to be read into the claims to make out a case of novelty, while permitting described details to be ignored in making out a case of infringement; that is to say, it was error to hold that the words "substantially as described" limited the followers to the rectangular form shown, but did not require them to exhibit "toothed recesses" formed in their edges or to have "bevel-ends" as described in the Byers patent (specification, page 1, lines 65 *et seq.*, Rec., page 4).

FIFTH: That the Court of Appeals erred in not holding that the state of the prior art so limited the Byers patent that the defendant did not infringe it.

III.

THE RELATION OF THIS CASE TO THAT OF THE T. H. SYMINGTON COMPANY vs. WILLIAM H. MINER.

The same draft-rigging which the Circuit Court of Appeals for the Seventh Circuit, in the case of The T. H. Symington Company vs. William H. Miner, has held to infringe the William H. Emerick patent No. 693,643 (p. 318), has been held by the Circuit Court of Appeals for

the First Circuit in this case to infringe the Jacob J. Byers patent No. 673,419 (pp. 274-276).

The National Malleable Castings Company, one of the plaintiffs herein, manufactured the draft-rigging which William H. Miner sold (p. 35 and p. 274) to railroad companies in infringement of the Emerick patent. The Malleable Company did not directly sell to the railroads (p. 57), but Miner sold in competition with the Symington Company upwards of 50,000 draft-riggings, p. 33 and p. 95) specifically like the draft-rigging of the Emerick patent under the protection of which the Symington Company was selling its draft-rigging to the railroads (p. 161).

To restrain Miner from making further sales of the form of draft-rigging which the Symington Company had theretofore enjoyed the exclusive right of making and selling by virtue of its ownership of the Emerick patent, this defendant, in March, 1912, brought suit against Miner in the United States District Court for the Northern District of Illinois, Eastern Division (p. 39; p. 275). The District Court (216 F. R. 198) and the Court of Appeals (229 F. R. 731) both found that the Emerick patent covered a specific construction of practical merit that had been adopted by Miner, and, accordingly, he was enjoined from further infringing the Emerick patent.

Among the defenses offered by Miner to the charge that he was infringing the Emerick patent was the claim that the draft-rigging he was selling was that of the Byers patent (229 F. R. 735), owned by the National Malleable Castings Company, which manufactured the draft-rigging for him, and was an anticipation of the construction patented to Emerick (229 F. R. 735). But the District Court (216 F. R. 199) and the Court of Appeals (229 F. R. 735-736) both held that Miner was not selling draft rigging constructed in accordance with the Byers patent, which was

commercially impractical, but had copied the successful and practical device of the Emerick patent.

Soon after having sued Miner (p. 326) the Symington Company sold some of its patented draft-rigging devices to the Pressed Steel Car Company for use upon cars of the Boston & Maine Railroad (p. 7), and thereupon The National Malleable Castings Company and Jacob J. Byers brought this suit, alleging that the Emerick draft-rigging made by the Symington Company was an infringement of the Byers patent.

IV

WHAT DRAFT-RIGGING IS.

Draft-rigging, or, more correctly, draft-gear, is a technical term used by car builders to designate the draw-bar, cushioning mechanism and all their attachments—in short, "the whole of the arrangements by which a car is drawn, and which resists concussions." (Car Builders' Dictionary.)

The tender of every locomotive is provided with a coupler or draw-bar capable of interlocking with a corresponding coupler on an adjacent car; and every car is provided at each end with a coupler by which it may be attached either to the locomotive tender or to another car. If couplers were rigidly attached to cars the underframes of the vehicles would be subjected directly to the strains and shocks incident to coupling cars together, and starting and stopping the trains. To soften these shocks cushioning mechanism is interposed between the car coupler and the underframe of the railway vehicle. (See opinions of Hale, J., p. 335, and of Court of Appeals, p. 348.)

V

DRAFT-RIGGING IS AS OLD AS RAILROADS AND THE ART IS CROWDED.

The draft-rigging art is as old as railroads. Ever since the first locomotive pulled the first car there have been draft-riggings. The most primitive draft-riggings had all the essential elements involved in the draft riggings now in use (p. 255), the sole differences being changes rung on the details of construction of one or more of the elements of the former structures (p. 256). The art is densely crowded with improvement patents. A former Examiner in the United States Patent Office (p. 245) testified that there were a "number of thousand of patents that have been devised along this line" (p. 253). It is a matter of judicial finding that William H. Miner, for whom the putative Byers draft-rigging is manufactured by the National Malleable Castings Company, has himself secured over one hundred patents on draft-riggings (Decision of U. S. C. C. A., Seventh Circuit, in Universal Draft Gear Co. and Nash v. Miner, 245 F. R. 349).

VI

THE FUNDAMENTAL COMBINATION COMMON TO DRAFT-RIGGINGS EXPLAINED BY REFERENCE TO THE FROST PATENTS.

The sketch below illustrates the two substantially identical draft-riggings that are shown in the Frost patents, Nos. 510,854 of 1893, and 532,272 of 1895 (p. 322), as applied to special forms of automatic car couplers. The construction of the car couplers disclosed in these patents is not a matter of present interest.

FROST DRAFT RIGGING

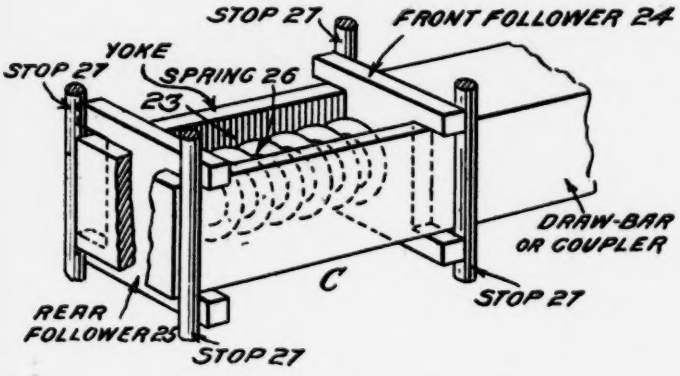

For purposes of description the common names of the parts, as well as the identifying reference numerals appearing in the Frost patent No. 532,272, have been applied to the sketch.

This draft-rigging is illustrated in both of the Frost patents at the right-hand ends of Figures 1 and 2, and at both ends of Figure 5.

The fundamental combination of elements common to the type of draft-rigging here under consideration is exemplified in the Frost patents. It comprises a coupler or drawbar, a U-shaped "yoke" or strap secured to and extending rearwardly from the draw-bar and forming a loop or rectangular frame surrounding a spring and a pair of plates (called "followers") between which the spring is interposed. This mechanism is supported between the center sills or "draft-timbers" of the car underframe so that the draw-bar and yoke may move back and forth to effect a compression of the spring between the two follower plates. The ends of the followers engage stationary stops or abut-

ments on the car framing to prevent one follower from retreating while the other is being moved toward it. That is, the front follower on its forward side bears against stationary stops which restrain its forward movement but allow it to move rearwardly, while the rear follower on its rearward side bears against stops which restrain its rearward movement but permit it to move forwardly. In *buffing,* the inner end of the draw-bar pushes the forward follower against the forward end of the spring, and as the spring at its rear end is held against *rearward* movement by the rear follower which engages the stationary rear stops, the rearward movement of the front follower compresses the spring and the buffing shock will thereby be absorbed. In *draft* the draw-bar pulls the yoke forwardly, and with it the *rear* follower which the yoke surrounds, thus compressing the spring against the forward follower which in turn is held against movement by the stationary front stops.

The specification of the Frost patent No. 532,272 (p. 322), at line 39 *et seq.*, of page 2, briefly describes this draft-rigging as follows:

> "The draw-bar section is provided with a slot or opening 23 in which two opposing slides 24 and 25 have movement, a spring 26 being located between said slides. The coupler is usually affixed to the car through the medium of clips 27, located at its draw-bar section, or any equivalent thereof may be used."

In patent No. 510,854 (p. 322) the draft-rigging is described in lines 32-40, on page 2, as follows:

> "The draw-bar is supported beneath the car preferably by means of yokes 24 (the clips or stops of the later patent), which yokes are secured at their upper ends to the beams of the car or to any convenient or proper support; and between the yokes two buffing slides 25 (marked 24 and 25 in the later patent) are

located, separated by a spring 26, the said slides and spring being adapted to take up and receive the buffing strain upon the coupler."

There is a small aluminum model of the yoke, spring and followers of the Frost patents. It is Defendant's Exhibit M.

VII

THE FROST PATENTS SHOW THAT NO ONE IS ENTITLED TO A BROAD PATENT COVERING A "HORIZONTAL" YOKE AND EASILY REMOVABLE SPRINGS AND FOLLOWERS.

In the Frost patents the arms of the yoke at the rear end of the draw-bar are arranged opposite each other horizontally constituting what is known in the art as a "horizontal" yoke, to distinguish it from the "vertical" form in which the yoke arms are arranged one above the other. This "horizontal" yoke is plainly shown in the immediately preceding sketch appearing in this brief and in Figures 1 and 2 of the drawings of both patents, for in Figure 1 in each case (the plan view showing the mechanism as seen from above) the spring is seen between the arms of the yoke, while in Figure 2, which is a view looking at the side of the mechanism, the spring is hidden by the yoke, and one side of the yoke hides the other side.

The spring and followers may be assembled within or removed from the loop of the "horizontal" yoke of Frost's draft rigging vertically from below without disturbing the remainder of the mechanism. To take down these parts the spring is removed from below and the H-shaped followers are then turned lengthwise and withdrawn vertically downward from between the arms of the yoke. To assemble the spring and followers within the yoke a reversal of this procedure is followed.

The advantage of using the "horizontal" type of yoke instead of the "vertical" type is that in the "horizontal" type the spring mechanism and followers are easily accessible for inspection and repairs, while with the "vertical" yoke the lower limb thereof passes beneath the springs and followers, rendering such parts inaccessible except upon the removal of the yoke from the car. The ability to remove the springs and followers piecemeal reduces the time and labor required for making repairs or replacements.

It will thus be seen that Byers did not invent the "horizontal" yoke or its advantages.

VIII

WHAT BYERS DID AND WHAT EMERICK DID.

Considering the state of the art, all Byers did was to set the "horizontal" yoke draft-rigging of the Frost patents in a new environment. That also was all that Emerick, the patentee of the draft-rigging that is complained of as an infringement, could do. But Byers did one specific thing and Emerick did a different specific thing. And the thing Byers did was impractical and unsalable (pp. 160, 163, 175, 286, 287, 289); only ten of his draft-riggings were ever manufactured, six in 1902 and four in 1908 (pp. 61-62), and Mr. Byers himself says (p. 61) that in making these he and his co-plaintiff "were only experimenting." But the thing that Emerick did was practical and successful and went into wide commercial use (p. 161); and it is admitted that, whereas, the National Malleable Castings Company only made ten draft riggings with "pocket" castings like Byers, it adopted the Emerick construction of "independent counterpart cheek-plates" to the extent of making over 50,000 of them for Miner to sell (p. 35; p. 95).

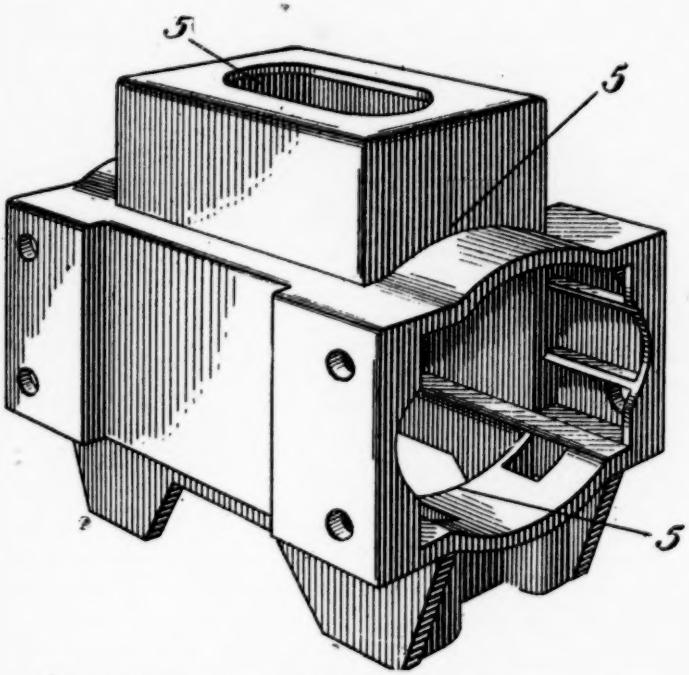

The environment or setting which Byers invented for the "horizontal" yoke draft-rigging of Frost was the rigid box-like structure (called in the Byers patent a "pocket" casting) illustrated above. It formed a unitary casing or housing (p. 160) for the "horizontal" yoke, springs and followers, extending from draft-sill to draft-sill of the car, bridging solidly the space between the two sills (p. 24) and secured rigidly to both by bolts. The bottom of the integral box or pocket was open to permit the springs and followers to be removed from the "horizontal" yoke in a downward direction. This rigid "pocket" formed a "connecting casting" (p. 56) securing one sill to the other (p. 24); it functioned to reinforce the under frame of the

car and keeps it square (p. 92); it prevented the draft-timbers from separating to allow the followers to accidentally escape from operative position (pp. 62-63).

The environment or setting which Emerick invented for the "horizontal" yoke type of draft-rigging was not the impractical "pocket" or box of Byers, but was a pair of independent counterpart cheek-plates of the special design shown in the uppermost of the two sketches appearing on the opposite page. The lower sketch shows the commercial form of these cheek-plates as manufactured and sold by the defendant.

Emerick's cheek-plates were narrow independent castings, spaced apart and independently secured to the sills. They did not tie the sills together in an attempt to resist distortion of the car underframe under the enormous strains to which it is subjected in service; but permitted flexibility of the car framing. They were interchangeable, counterpart castings, separately removable and replaceable in case of wear or breakage, and, being exact duplicates, and each part independently reversible, could be substituted one for the other, or either part turned upside down and applied, with the greatest ease and expedition. They were less cumbersome to handle and less expensive (pp. 286-287); and they afforded a practical mounting for draft riggings of the type using a horizontal yoke (p. 161).

Emerick provided independent cheek-plates, each having four relatively short lugs or abutments, one at each corner of each cheek-plate, for limiting the movement of the followers. The cheek-plates, being independent, could be separately secured to the car sills so as to allow a space to intervene between the opposed ends of the corresponding lugs on the two castings, thus permitting the lugs to overlap the followers for a short distance only. This construc-

tion enables car builders to follow the comparatively cheap and rapid plan (p. 287) of independently riveting each cheek-plate to its corresponding center sill before assem-

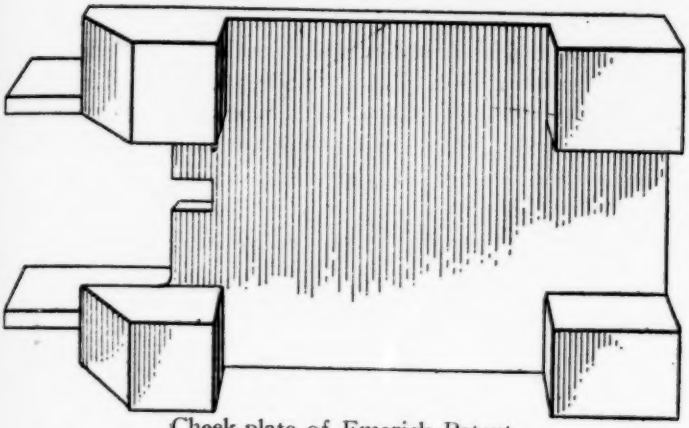

Cheek-plate of Emerick Patent.

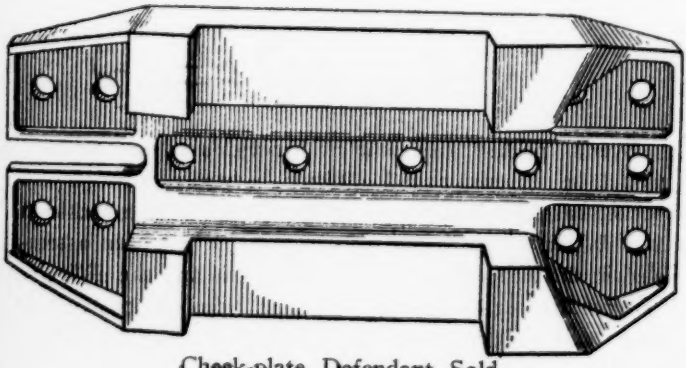

Cheek-plate Defendant Sold.

bling the two sills in the underframe, because (as shown in the sketch appearing below) the short, widely spaced, stop lugs on the cheek-castings compensate for any lack of alinement of the cheek-plates opposite each other, by allowing the followers, under the stress of the spring, to tilt or incline automatically and rest against the cooperating lugs of *both* castings, both in buffing and under draft, the result being that a transference of equal pressure and shock to both cheek-plate and a corresponding equal distribution or pressure and shock to both supporting sills is always insured (p. 249; p. 287).

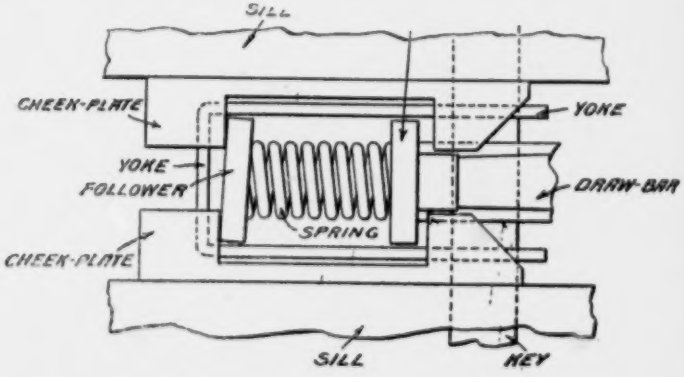

Byer's "pocket" has none of Emerick's advantages and would be expensive and difficult to apply. The Byers pocket casting would have to be jacked up into position and riveted to the center sills after they had been assembled in the underframe. Because of this and the *difficulty of* effecting registration of the rivet holes in both of the center sills with the corresponding holes of the Byers pocket, it would "probably cost 25 per cent more to apply the integral pocket casting than separate cheek-plates" (p. 287).

IX

THE BYERS PATENT IN SUIT.

The Byers patent No. 673,419 (p. 4) illustrates a railway draft-rigging, and discloses three different forms or modifications of the device. One form is illustrated in Figures 1 to 5, inclusive; a second form is illustrated in Figures 6 to 9; and a third is shown in Figures 10, 11, and 12. In each form there is an integral pocket casting, marked 3 in all the views, that extends from draft-sill to draft-sill, and is secured rigidly to both by bolts. In the form illustrated in Figures 10, 11 and 12, the pocket is additionally provided with a pair of metal draft-arms 13 cast integral therewith. This pocket (see sketch on page 15, *ante*) is merely a box, open at the ends to permit the introduction and operation of the coupler butt and the yoke attached thereto, and having an opening in the bottom adapted to be closed by a removable plate or lid. In Figures 10, 11 and 12 this removable plate is indicated by the reference numeral 9′, while in all other views it is marked 9. The pocket member encases the springs and followers, and the yoke extends into it, passing around both followers and the springs interposed between them. The specification states (p. 1, line 36, *et seq.*):

> "The pocket may be cast in a single piece and is provided with horizontal lugs 5 5, which extend across the pocket, above and below, and constitute abutments for the followers 6 6′, which are set in the pocket. The pocket and lugs are suitably braced by metal ribs or flanges, as shown. 7 7′ are the springs, placed, preferably, one above the other, between the followers."

The yoke 2′ employed in the Byers draft-rigging for communicating pulling strains from the draw-bar to the springs and followers is of the "horizontal" type already

described in connection with the Frost patents (*ante*, pp. 10-13). It is merely a U-shaped strap or frame whose arms are arranged opposite each other horizontally and attached to the sides of the drawbar, thus rendering the opening in the yoke accessible from below and thereby permitting the springs and followers to be inserted in and removed from the yoke vertically from below without requiring the draw-bar or yoke to be disconnected from the car. Concerning this feature the Byers patent states (p. 403; specification page 1, lines 53-69):

> "The pocket is open at the bottom, so that the follower-plates and springs may be removed freely from within the yoke in a vertical direction without the necessity of disengaging the yoke from the draw-bar, since the follower-plates are not connected with the drawbar otherwise than by being placed between the sides of the yoke. This removal is made possible by taking off a cap-plate 9, which closes the opening at the bottom of the pocket and is secured by bolts 9a, and the follower-plates can then be pried out by means of a tool applied to toothed recesses 10, formed in the edges of the follower-plates. To facilitate the insertion of the follower-plates and springs, I prefer to bevel the ends of the follower-plates, as shown at b b."

The Byers patent discloses several different means for limiting the approach of the followers to prevent over-compression and consequent injury of the springs.

In the construction illustrated in Figures 1 to 5, inclusive, Byers discloses a special form of follower illustrated in detail in Figures 4 and 5, the former figure showing this follower as it would appear when looking at the face thereof against which the springs bear, and the latter illustrating its appearance when viewed from the side. As shown and as particularly described in lines 45 to 50 of page 1 of the patent (p. 403), this follower is merely a flat plate having

at its middle a projection 8 which is concaved on its opposite sides to conform to the springs between which it extends. The projection 8 is at right angles to the plate. The projections 8 on the two followers are of such length that they contact each other before the coils of the springs are entirely closed.

Another form of device for limiting the approach of the followers is illustrated in Figures 6, 7, 8 and 9, especially in Figure 9. This means is merely a short metal block or "stop-piece" 12, independent of the followers and lying loosely between the two springs. When the followers approach each other until they clamp this block or "stop-piece" between them their movement is arrested and, consequently, no further compression of the springs can occur.

Figures 10, 11 and 12 show the same stop-block 12 that appears in Figures 6 to 9 and in addition thereto there are other stop-blocks 18 intended for a similar purpose. These latter are merely short cylinders freely mounted within the axial openings of the springs.

In Figures 1, 2 and 3 of the drawings the connection between the yoke and coupler butt or draw-bar is effected by two rivets which extend transversely through both of these members. In Figures 6, 7 and 8 the yoke and draw-bar are shown as connected by a wide flat rivet marked 11. In the form of construction illustrated in Figures 10, 11 and 12, the standard key of the "continuous" system of draft-riggings is availed of by Byers to form the connection between the old form of tension member which he adopts and the common draw-bar. This key is shown at 17 in those figures of the Byers drawings which illustrate the applicability of his improvement to the American continuous system of draft-rigging.

X

THE CLAIMS ALLEGED TO BE INFRINGED.

The Byers patent has ten claims. With the exception of claims 4 and 9, it is alleged that the defendant infringes all of them. For convenience of consideration these claims may be divided into three groups.

Group 1.

The claims of the patent which are directed broadly to the free removability of the springs and followers from between the arms of the yoke without the necessity of removing the coupler from the car, are those numbered 1, 2 and 10, and are as follows:

> "1. A draft-rigging having in combination with the draw-bar, a yoke, the arms of which are connected to the sides of the draw-bar, springs arranged one above the other within the yoke, and followers also arranged between the arms of the yoke, said springs and followers being removable from below, independently of the draw-bar; substantially as described.
>
> 2. A draft-rigging having a yoke, the arms of which are adapted to be connected to the sides of a draw-bar, springs arranged one above the other between the arms of the yoke, and followers adapted to fit against the ends of both springs, and also contained between the ends of the yoke, said springs and followers being removable from below independently of the draw-bar; substantially as described.
>
> 10. A draft-rigging having springs arranged vertically, one above the other, followers, a yoke between the sides of which the springs and followers are set, said springs and followers being removable vertically from below independently of the draw-bar; substantially as described."

It will be seen that these claims are not confined to any specific details of the parts, but are directed merely to a general combination of elements. The combination recited in each of the claims is a combination of four elemental mechanisms only, namely, (1) a draw-bar, (2) a yoke, (3) springs, and (4) followers. No other element is included in any of these claims.

Claim 1 specifies, in combination with the usual draw-bar, a yoke whose arms are connected to the sides of the draw-bar, springs arranged one above the other within the yoke, and followers also arranged between the arms of the yoke, the relationship of parts being stated to be such that the springs and followers may be removable from below independently of the draw-bar.

Claim 2 is in substance the same as claim 1. There is no substantial difference between them. The only difference is in mode of expression. The combining elements are precisely the same in both. In the first claim the draw-bar is positively included as an element of the combination, while in the second claim the draw-bar is necessarily implied from the statement that the yoke is adapted to be connected to a draw-bar. The remaining elements recited in claim 2 are the yoke, springs and followers and, as in the case of claim 1, the springs and followers are stated to be removable from below independently of the draw-bar.

The only material difference between claim 10 and claim 1 is that claim 10, although it mentions the draw-bar, does not state that the draw-bar is connected to the yoke at all. As a matter of strict interpretation this may differentiate claim 10 from claim 1; but nevertheless it is manifest that the substance of these two claims is the same, for, in an operative structure, there must necessarily be a connection between the yoke and draw-bar.

The claims of this group do not involve the "pocket"

which ties the sills together and in which the draft-rigging parts are encased, or the spacer-blocks which prevent injury to the springs, or any other feature disclosed in the Byers patent.

Group 2.

Claim 8 is the only claim in this group. It reads:

> "8. A draft-rigging having springs set one above the other, and a follower engaging the ends of both springs and having at the middle a stop projection which separates the springs; substantially as described."

This claim relates to a draft-rigging having springs, and a follower formed with a stop projection extending between the springs. The alleged novel feature of the claim is the special form of follower specifically illustrated in Figures 4 and 5 of the drawings and described in the specification at lines 42 to 48, page 1 (p. 403), as follows:

> "7, 7' are the springs, placed, preferably, one above the other between the followers, and to hold them in place as well as to limit the approach of the followers, I may provide the latter with projecting stops 8, which extend from such followers between the springs."

A follower of a special form enabling the independent spacer-block to be dispensed with is, in brief, the invention which Byers sought to cover by this claim. Such a follower has the obvious advantage over the loosely mounted, independent stop-piece or spacer-block 12 of reducing the number of parts of the draft-rigging, since it enables the independent spacer-block to be wholly dispensed with.

Group 3.

The claims comprised in this group are those numbered 3, 5, 6 and 7.

"3. A draft-rigging having a *pocket,* lugs, extending horizontally across the pocket at the upper and lower portions thereof respectively, followers within the pocket which bear against the lugs, and a yoke which extends within the pocket between the lugs and around the rear follower; substantially as described.

5. A draft-rigging having a yoke open at the bottom and having a spring and followers arranged between the arms of the yoke, and a *pocket* within which the yoke extends and which is also open at the bottom to permit removal of the spring and followers independently of the draw-bar; substantially as described.

6. A draft-rigging having a yoke open at the bottom and having a spring and followers arranged between the arms of the yoke, a *pocket* which contains the yoke and is also open at the bottom to permit removal of the spring and followers, and a detachable closure for the opening in the pocket; substantially as described.

7. A draft-rigging having, in combination with the draw-bar and spring mechanism, a yoke the arms of which are connected to the sides of the draw-bar, a *pocket* within which the yoke extends, and a key which extends horizontally through the draw-bar and yoke, and through slots in the walls of the pocket; substantially as described."

Each of these claims is characterized by including as an element of the recited combinations the rigid unitary housing 3 bridging the space between the sills and tying them together.

XI

THE ALLEGED INFRINGING STRUCTURES.

The defendant agreed to sell its cheek-plates and spacer-blocks or "stop-pieces" to the Pressed Steel Car Company for incorporation in draft-rigging to be applied to cars of the Boston & Maine Railroad in substantial accordance with the arrangement of parts that is exhibited in plaintiff's exhibit No. 5 representing a full-sized draft-rigging attached to the sills of a car. The cheek-plates and spacer-blocks which the defendant agreed to sell are illustrated in blue prints attached to its answers to the plaintiff's interrogatories (p. 5) and are shown in the sketches appearing on the opposite page; and on the succeeding page are a perspective view and a cross-section of the alleged infringing structure as applied to a car, the car framing being shown in dotted lines. Defendant's Exhibits H and I are models of the cheek-plates (p. 279). The spacer-blocks are blocks such as are floatingly mounted between the followers of draft-rigging to prevent the springs from being damaged.

The defendant neither agreed to sell, nor did it sell any yokes, or draw-bars, or followers, or springs, or pocket-castings.

The only elements of this alleged infringing draft-rigging that were to be furnished by the defendant were the spacer-blocks or spring-protectors to be inserted between the followers, and the independent cheek-plate castings which were to be riveted to the sills of the car in separated or spaced relation.

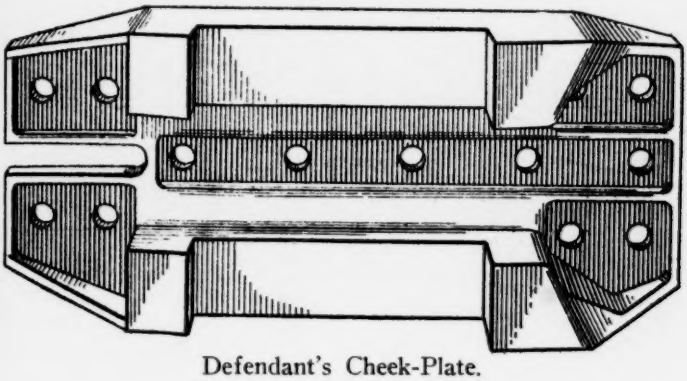

Defendant's Cheek-Plate.

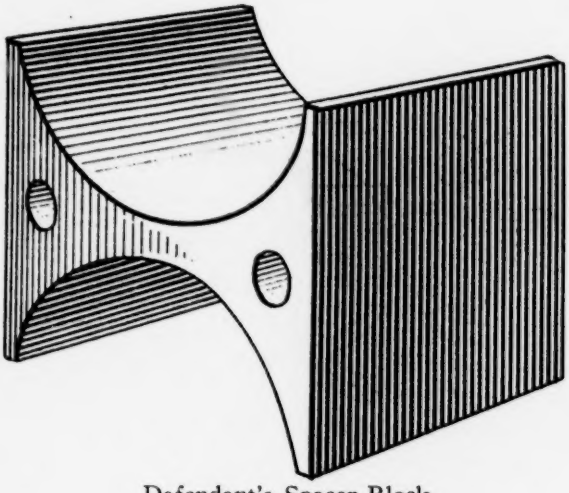

Defendant's Spacer Block.

ALLEGED INFRINGING STRUCTURE.

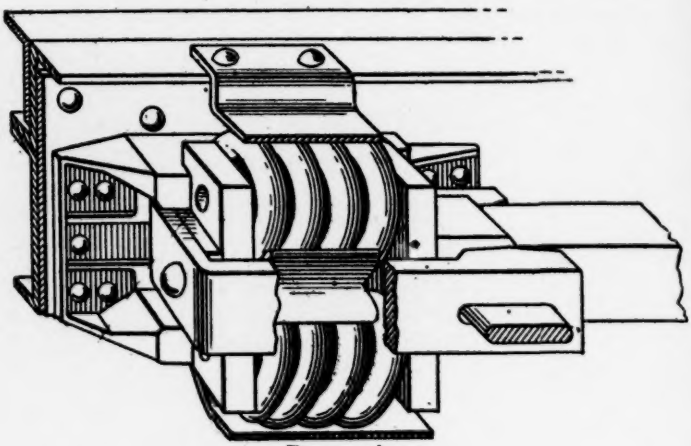

Perspective.

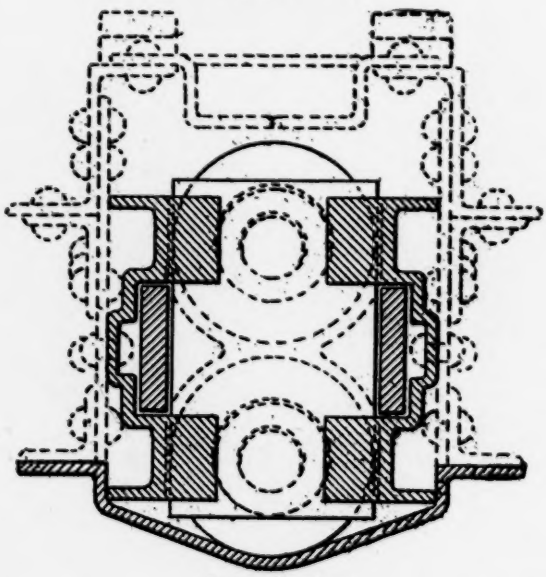

Cross-Section.

XII

WHETHER CLAIMS 1, 2 AND 10 OF THE BYERS PATENT IN SUIT BE VALID OR INVALID, THE DEFENDANT HAS INFRINGED NONE OF THEM.

The Circuit Court of Appeals correctly held that these claims were not infringed, saying (p. 353):

> "We are of the opinion that the defendant does not infringe any of them, as it does not furnish any element than enters into them. Thompson & Houston Electric Co. v. Ohio Brass Co., 80 Fed. 712; Leeds & Catlin Co. v. Victor, 213 U. S. 325."

As pointed out earlier in this brief, (*ante*, p. 23) claims 1, 2 and 10 of the Byers patent call for no elements except a draw-bar, a yoke, springs and followers. And defendant has not made, used or sold, or agreed to make, use or sell, any one of these things.

> "The thing *patented* is the thing *claimed*, whatever the patentee may suppose or assert that he has invented." Robinson on Patents, Vol. 2, Sec. 505 (citing cases).

This is an elementary proposition. A device can not be an infringement of a patent unless it is an infringement of some *claim* of that patent; and contributory infringement can only be predicated of the making, using, or selling of some one or more elements of a combination that is covered by a patent, *i. e.*, that is *claimed* in the patent. Canda v. Michigan Malleable Iron Company, 124 F. 486; Thomson-Houston v. Ohio Brass Company, 80 Fed., 712; Leeds & Catlin Company v. Victor, 213 U. S., 325.

As said by his Honor Judge, afterwards Mr. Justice, Lurton, in Bullock Electric & Manufacturing Company v. Westinghouse Electric & Manufacturing Company, 129 F. 105, 111:

> "The intent and purpose that the element made and sold shall be used in a way that shall infringe *the combination in which it is an element* constitutes the necessary concert of action between him who furnished the single part and he who actually does the injury by the assembling and using of all the parts in such a way as to be an infringement. This principle runs through all the cases upon contributory infringement" (citing cases).

In Thomson-Houston v. Ohio Brass Co., *supra*, Judge Taft, delivering the opinion of the Circuit Court of Appeals of the Sixth Circuit, said (p. 721):

> "It is well settled that where one makes and sells one *element of a combination covered by a patent* with the intention of bringing about its use *in such a combination* he is guilty of contributory infringement and is equally liable to the patentee with him who in fact organizes the complete combination."

Authorities might be easily multiplied to show that to be liable as a contributory infringer of a combination claim one must furnish an element of such combination.

The plaintiffs do not claim that the defendant has furnished or agreed to furnish either a draw-bar, or a yoke, or springs, or followers, which, combined together, are all of the elements recited in the combination of parts covered by claims 1, 2 and 10 of the Byers patent in suit.

XIII

IT IS NOT PERMISSIBLE TO MAKE OUT A CASE OF INFRINGEMENT BY READING ELEMENTS INTO CLAIMS OF PATENTS.

In order to make out a case of infringement of claims 1, 2 and 10 the plaintiffs desire to alter them by adding *cheek-castings* thereto. The plaintiffs, at page 23 of this brief in the Court of Appeals, state their argument thus in discussing claim 1:

> "Furthermore, the preamble of the claim—'draft-rigging'—includes the necessary means for securing these parts to the car; that is, some form of support, in this case cheek-castings. Hence infringement (of claim 1) is clear. Claims 2 and 10 are of a character similar to claim 1, as we have explained above. * * * It is clear that claims 2 and 10 are therefore likewise infringed."

The plaintiffs' proposal to read "cheek-castings" into these claims is not permissible. It is settled law that such reconstruction would be improper even if the Byers patent disclosed "cheek-castings," which is not the case.

> "While the patentee may have been unfortunate in the language he has chosen to express his actual invention, and may have been entitled to a broader claim, we are not at liberty, without running counter to the entire current of authority in this court, to construe such claims to include more than their language fairly imports. Nothing is better settled in the law of patents than that the patentee may claim the whole or only a part of his invention, and that if he only describe and claim a part, he is presumed to have abandoned the residue to the public." *McClain v. Ortmayer,* 141 U. S., 419.

In *McCarthy v. Lehigh Valley R. Co.*, 160 U. S., 110, Mr. Justice Brown, delivering the opinion of this Court, said:

> "* * * we know of no principle of law which would authorize us to read into a claim an element which is not present, for the purpose of making out a case of novelty or infringement. The difficulty is that if we once begin to include elements not mentioned in the claim in order to limit such claim and avoid a defense of anticipation, we should never know where to stop."

In *Stearns & Co. v. Russell*, 85 F., 218, the Circuit Court of Appeals for the Fifth Circuit, said:

> "To imply as elements of a claim parts not named therein for the purpose of limiting its scope, so that it may be accorded novelty, is contrary to a well settled rule of the patent law." * * * "But it is said that the claims of the patent in question here do contain a suggestion of such a combination in the opening words 'In pill-dipping mechanism.' We think these words are used to define the useful purpose to which the patentee intended his device to be devoted, and can not bear the construction by which all the other substances and parts used in dipping pills may be considered as making up the combination claimed."

XIV

CLAIMS 1, 2 AND 10 ARE INVALID IN VIEW OF THE PRIOR STATE OF THE ART, AND ESPECIALLY IN VIEW OF THE FROST PATENTS.

The Frost patents, No. 510,854, of 1893, and No. 532,272, issued in 1895, which have been already described (*ante*, pp. 10-14) disclose a draft-rigging which is a complete anticipation of claims 1, 2 and 10 of the Byers patent.

The draft-rigging of these patents is illustrated by the model defendants' Exhibit M. The springs and followers of the Frost draft-rigging may be put in place and removed from below independently of, that is, without taking down, the draw-bar. While these claims do not refer to a construction in which the springs and followers may be removed from below without disturbing the *yoke*, the springs and followers of Frost's draft-rigging may be removed independently of the yoke also. Each of the Frost patents discloses a U-shaped yoke open through in a vertical direction and the arms whereof are in the same horizontal plane with each other. Arranged between the arms of the yoke in each instance and fitting against the ends of the interposed spring are a pair of followers. The springs and followers of the Frost draft-rigging may be put in place and removed from below without disturbing either the draw-bar or the yoke by introducing the H-shaped followers upwardly into the U-shaped yoke and turning them into position, and then assembling the spring between the two followers. *So far as claims 1, 2 and 10 are concerned, the invention of Byers is completely anticipated by the Frost patents* (pp. 257-259).

Frost shows a single spring between his follower plates, while the Byers patent shows two springs arranged side by side in the manner called a "twin" arrangement. The number of springs which are incorporated in a draft-rigging is simply a question of the capacity it is desired the draft-rigging shall have (p. 264). There are various arrangements of springs in the draft-rigging art. In some instances they are placed one above the other; in other instances beside each other; in some instances they are placed in alignment axially, or in "tandem"; in other instances as many as four springs are used (p. 249). The Pilcher patent No. 616,965, of Jan. 3, 1899 (p. 322) shows a number

of such arrangements of springs. The Byers patent states that the arrangement of the springs there shown is preferable only (specification, page 1, lines 43-44), Byers evidently having in mind the numerous other arrangements of springs common in the art. Both Mr. Decker, defendant's patent expert, and Mr. Livermore, the plaintiff's patent expert, agree that the particular arrangement of springs shown in the Byers patent is not an essential feature (p. 30; p. 249).

The plaintiff's expert was forced to admit that the Frost patents contain all the elements of claims 1, 2 and 10, and that the springs and followers are removable from below independently of the draw-bar and yoke (pp. 102-103); but he endeavored to overcome the sufficiency of those patents as anticipations by suggesting:

(1) That the draft-rigging portion of the mechanism *disclosed* in the Frost patents is not the subject of *claim* in either of them (p. 102). Our answer to this criticism is that what is *disclosed* in a patent and not therein claimed by the patentee is dedicated to the public and no subsequent inventor can deprive the public of that which the earlier patentee has dedicated to it.

(2) That the Frost draft-rigging is not adequately strong (p. 102). Our answer to this is that increasing or reducing the strength of parts to adapt them for conditions of service is the daily work of mechanics and engineers. Woodbury Planing Machine Co. v. Keith, 101 U. S., 479; Peters v. Hanson, 129 U. S., 541.

(3) That some of the views of the Frost drawings do not show a support to keep the springs in place (p. 103). Our reply to this is, first, that a support for the springs is not involved in the combinations claimed; second, that means for supporting the springs are common to every draft rigging (p. 99); and, third, that the rules of practice of the

Patent Office (Rule 50) did not then and do not now require patent drawings to illustrate old details, but require the patentee to confine his drawings to "so much only of the old structure as will suffice to show the connection of the invention therewith."

The springs and followers of the draft-rigging of the *Simons* patent No. 627,540, June 27, 1899 (p. 322; and see Defendant's Exhibit Model N), are removable from the yoke without disturbing either the yoke or the draw-bar. The same principle is involved as in Byers. The manner of removing the springs and followers through the opening between the arms of the yoke, independently of or without taking down the draw-bar, is identical in each. Simons shows the yoke related to the draw-bar in the well-known "vertical" position and removes the springs and followers from between the arms of the yoke in a horizontal direction; Byers rotates the same old yoke to the equally well-known "horizontal" position and removes the springs and followers from between the arms of the yoke just as Simons did, but in a vertical instead of in a horizontal direction. *Byers only does in a vertical direction what Simons plainly taught could be done in any direction. This is not invention* (pp. 264-267). Especially is it not invention in view of the fact that the idea of downward removability of the springs and followers of the draft-rigging was an old idea, specifically disclosed in the Frost patent.

Simons (see Figures 1 and 2 of his patent No. 627,540, and Defendant's Exhibit Model N), illustrates the ordinary, but not general, practice of seating the followers in openings in the sills (p. 171), the springs and followers being removable by merely withdrawing them from the opening in the yoke after removing the bolts 12 and taking off the guides 13, 13.

The Simons type of draft-rigging is in use on the Seaboard Air Line Railway (pp. 177-178).

XV

THE COURT OF APPEALS ERRONEOUSLY MADE OUT A CASE OF NOVELTY FOR CLAIMS 1, 2, 3, 5, 6 AND 10 OF THE BYERS PATENT BY HOLDING THAT THE FROST PATENTS DID NOT ANTICIPATE THEM BECAUSE THE CLAIMS SHOULD BE CONSTRUED TO "CONTEMPLATE FOLLOWERS RECTANGULAR IN SHAPE INCLUDED ENTIRELY WITHIN THE VERTICAL LINES OF THE YOKE, WITH FREE REMOVABILITY FROM BELOW" (p. 335). THIS IS READING SOMETHING INTO THE CLAIMS THAT IS NOT THERE (McCarthy v. Lehigh Valley R. R. Co., supra).

In its decision (p. 348) reversing the District Court and holding claims 1, 2, 3, 5, 6 and 10 of the Byers patent valid and not anticipated, the Circuit Court of Appeals expressed its views as follows:

(p. 352) "As heretofore pointed out, the follower-plates of the plaintiff's device are *described* in the specification as *rectangular in shape*, as placed between the sides of the yoke, and as being removable from below by being 'pried out by means of a tool applied to toothed recesses 10, formed in the edges of the follower-plates.' The claims do not specifically state the shape of the followers; they do, however, state that *they possess the quality of being 'removable from below, independently of the draw-bar, substantially as described,'* which, according to the specification, *means that they may be removed 'in a vertical direction without the necessity of disengaging the yoke from the draw-bar' and be pried down by means of a tool applied to toothed recesses in the edges of the follower-plates.* To be capable of being thus removed, *the vertical edges of the followers must be straight throughout their length*, and, as the claims disclose that the followers are 'contained between,'

'arranged between,' or 'set between' the ends, arms or sides of the yoke, the fair inference is that *the followers called for by these claims, as well as by the specification, are rectangular in shape.*"

Again:

(pp. 352-3) "The question then is, whether these claims for a draft-rigging having *in combination with the draw-bar a horizontal yoke, springs* vertically arranged within the yoke, and *followers rectangular in shape* set or contained between the sides or arms of the yoke, the springs and followers being removable from below, independently of the draw-bar, are anticipated, and, if not, are infringed by the device of the interrogatories.

"The devices of the prior art which have been called to our attention fail to disclose *such a combination*, and we regard the combination as novel and the *prima facie* evidence of invention, due to the issuing of the patent, as not overcome."

Again:

(p. 353) "In the patent granted to Frost (No. 532,272, January 8, 1895), the device contemplates the use of a single spring, and the followers, *instead of being rectangular in shape, have arms extending horizontally above and below the yoke. They could not be removed by prying them directly down*, without first removing the spring or springs, as in Byers'. It would be necessary to first remove the spring, then turn the followers to a position in which their arms would be lengthwise of the yoke before they could be removed. This surely is not the solution of the problem of free removability presented by Byers, especially when the weight of the parts and pressure of the springs is considered."

Again:

(p. 354) "In the earlier devices of the draft-rigging art, the followers were arranged horizontally rather than vertically and the ends of the followers engaged the vertical lugs of the old cheek-plates. During the period covered by the Frost and Pilcher patents, when the method was introduced of placing the followers vertically, it became necessary, in order to avail themselves of the vertical lugs of the old cheek-plates, to so construct the followers that their sides would extend horizontally and engage the vertical lugs, but *Byers conceived the idea of projecting the lugs horizontally to engage the followers, thus doing away with the horizontally-projecting arms of the followers of the Frost device.* By so doing, he was enabled to make his construction stronger and render the removability of the springs and followers from below easier. *While the followers in the Frost patent are removable from below without disengaging the yoke from the draw-bar, they are not as readily or as easily removable as in Byers,* and the extended arms on the followers of Frost were more likely to become broken as they could not be reinforced and strengthened as could the lugs in Byers' device."

In arriving at the finding that claims 1, 2, 3, 5, 6 and 10 "contemplate followers rectangular in shape included entirely within the vertical lines of the yoke, with free removability from below," and that, as thus interpreted, said claims are valid and those numbered 3, 5, and 6 are infringed, the Court of Appeals has overlooked and misapprehended the following facts and has, therefore, fallen into an error:

(1) The court is in error in saying that "the follower-plates of the plaintiffs' device are *described* in the specifications as rectangular in shape." The specification of the Byers patent does not so *describe* the followers. The followers are carefully described in the specification as (line 45) provided "with projecting stops 8," as (line 65) provided with "toothed recesses 10, formed in the edges of the

follower-plates," and as (line 68) having "bevel ends"; but all reference to the shape of the followers is omitted from the specification. A rectangular form of follower is merely *shown* in the drawings of the Byers patent; there is no *description.*

(2) In treating the phrase *"substantially as described,"* with which each claim of the Byers patent is concluded, as qualifying the word "followers" so as to import that the followers are required to have the structural characteristics "as described" in the specification, the Court of Appeals has overlooked the established rule that the phrase "substantially as described" qualifies the *whole combination* of elements and does not qualify any one element or part recited in the claim in any further or different degree than it qualifies every element mentioned in the claim; and this is indicated and emphasized by the punctuation of the claims themselves, in which the phrase "substantially as described" is preceded by a semi-colon. The Court of Appeals has also overlooked the fact that it is a settled rule of interpretation of the Patent Office, binding upon the patentee and upon which the public has a right to rely in ascertaining the true interpretation of claims, to reject the clause "substantially as described" as importing particular limitations into a claim; *National Tube Co. v. Mark et al.*, 216 F. 507; 133 C. C. A., 13 (collecting the Commissioner's decisions).

If it is *not* error to read into the claims *supposedly* described details of construction of the followers, it is error, applying the same rule, to find infringement by omitting to read into the claims *described* details of construction of the followers. But infringement was found by that very process. The followers of the draft-rigging for which the defendant furnished cheek-plates and spacer-blocks have no "toothed recesses" formed in their edges nor are they formed with "bevel-ends," but both of these are *"described"*

features of construction of the followers of the Byers patent.

(3) Plaintiffs' Exhibit No. 16 (p. 131; a certified copy of the file wrapper, contents and drawings of the application on which the Byers patent was granted) discloses the fact that *followers extending laterally beyond the vertical sides of the yoke and not entirely included within the sides of the yoke were in the mind of the Commissioner of Patents in granting the patent and in the mind of the applicant Byers in soliciting the patent,* and that the "followers" specified in the claims were not regarded either by the Commissioner of Patents or by the applicant as limited to followers of rectangular shape, or such as were included entirely within the vertical lines of the yoke, or such as might be removed from below with any special or high degree of ease or freedom. The understanding of the Commissioner and of the applicant in this regard appears from the history of the granting of claim 10 of the Byers patent. The original number of this claim was 16; it subsequently became claim numbered 14, and finally claim 10 (p. 137). As originally presented and as finally allowed the terms of this claim differed in nothing except that the allowed claim contained the words "independently of the draw-bar," inserted in it by amendment (p. 137), in view of the following rejection of the Commissioner holding that *"the terms of the claim are met"* (pp. 138-139):

> *"Claim 16 is rejected* on (Pilcher) patent No. 616,965. The springs and followers in this patent are not removable in a vertical direction, but since the claim is for a draft-rigging it is thought *that the terms are met* for the reason that the springs and *followers* may be removed vertically from the casing which supports them by removing the whole draw-bar."

The identity of terms employed in claim 16 as rejected and in claim 10 as granted is shown by a comparison of

those claims here set out, the words in italics in claim 10 representing the only difference in the terms of the two.

Original form.	Allowed form.
16. A draft-rigging having springs arranged vertically, one above the other, followers, a yoke between the sides of which the springs and followers are set, said springs and followers being removable vertically from below; substantially as described.	10. A draft-rigging having springs arranged vertically, one above the other, followers, a yoke between the sides of which the springs and followers are set, said springs and followers being removable vertically from below *independently of the draw-bar;* substantially as described.

The Pilcher patent was held by the Commissioner to meet the terms of claim 16, and the applicant Byers, by amending the claim, admitted the correctness of the Commission's holding and can not now be allowed to question it. The term "followers" employed in the claims comprehends Pilcher's followers, which, where the horizontal yoke is used (p. 322; Figs. 9-11) *project horizontally beyond the sides of the yoke and are not included entirely within its vertical lines.*

The decisions of this court determining that the construction to be given to claims of letters patent is controlled by the proceedings on the application in the Patent Office are numerous and controlling (e. g., *Roemer v. Peddie,* 132 U. S., 317, and cases there collected; *Morgan Envelope Co. v. Albany Paper Co.,* 152 U. S., 429; *Hubbell v. United States,* 179 U. S., 80).

(4) The Court of Appeals erred in regarding the subject-matter of the several claims of the Byers patent as differentiated from the Frost patent because of the comparative utility of the two devices in respect to the degree of

ease with which their respective springs and followers may be removed. The same end or purpose is accomplished in Frost as in Byers, namely, the removal of springs and followers independently of the draw-bar. If there is a difference between them in respect to the ease of removability of their springs and followers, that difference is only a difference in *degree* and not a difference in kind or character; and the rule of decision of this court, to the effect that a difference in *degree* from what has been attained or a more perfect result will not suffice to sustain a patent, should have been recognized in this case; *Smith v. Nichols,* 88 U. S., 112; *Guidet v. Brooklyn,* 105 U. S., 550; *Stephenson v. Brooklyn Crosstown R. R. Co.,* 114 U. S., 149; *Burt v. Evory,* 133 U. S., 349; *Railroad Supply Co. v. Elyria Iron and Steel Co.,* 242 U. S., 609.

And the record does not warrant a finding that the followers of the Byers patent are in any substantial degree more easily removable than the H-shaped type of followers such as are employed in the Frost patent.

XVI.

THE DISTRICT COURT AND THE COURT OF APPEALS BOTH HELD CLAIM 8 OF THE BYERS PATENT NOT INFRINGED AND INVALID.

Claim 8 reads:

> "8. A draft-rigging having springs set one above the other, and *a follower engaging the ends of both springs and having at the middle a stop projection* which separates the springs; substantially as described."

Of this claim the Court of Appeals said (p. 353):

"Claim 8 is limited to followers with stop projections used in connection with two springs, and the followers and springs are to be used in connection with a horizontal yoke or some other draw-bar attachment. A follower device with a stop projection was old as shown in the patent granted to Hinson (No. 635,322, October 24, 1899). This claim is not only anticipated by the prior art, but is not infringed as the defendant does not provide followers with projecting stops."

And the District Court said (p. 339):

"The patent to Perry, No. 228,385, issued in 1880, discloses the idea of making separate spacer blocks and shaping them to conform to the springs. The Hinson patent, No. 635,322, issued in 1899, shows the follower and spacer block combined in a device called a 'head block' very similar to that shown in the Byer's drawing."

(1) *Non-infringement.* We have already pointed out (*ante*, p.) that contributory infringement of a combination claim can only be predicated of furnishing *an element of the claimed combination* with the intention that the remaining elements of the combination shall be supplied by another person. If no element of the combination which is recited in the claim is furnished, then there can be no infringement. Such is here the case. Defendant has agreed to supply *check-plates and spacer-blocks or spring-protectors only;* nothing else. And claim 8 is for a combination of springs and followers. A follower with a stop projection, such as Byers claims, is a flat plate with a central member projecting at right angles, this projecting member, in the form of the invention shown, being concave on both sides; see Byers' patent, Figure 5. Defendant did not agree to furnish anything of that sort.

Defendant furnished spacer blocks or stop-pieces (illustrated below) like that shown in Card F-1653 (p. 8; 20 b) annexed to the interrogatories and marked "B" in the drawing filed with the interrogatories (p. 124; diagram 200).

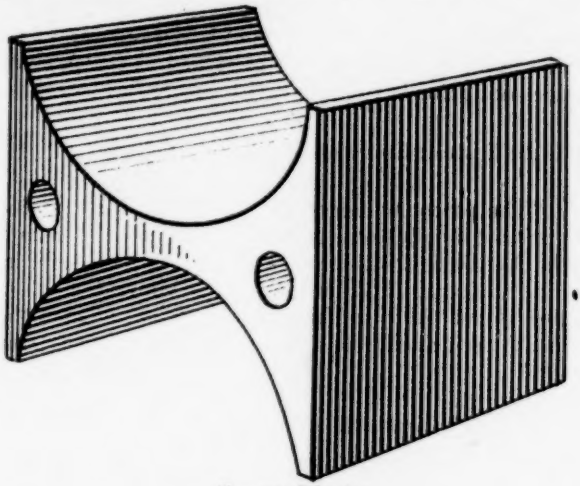

Spacer-Block.

These spacer-blocks are placed between the followers to limit their approach and thus prevent injury to the springs. Byers did not claim a separate spacer-block, an old construction; but claimed a *follower* which he believed to be novel (p. 48) but which turns out to be old also.

The alleged infringing draft rigging not having followers of the kind specified, and the defendant not having furnished or agreed to furnish any followers of any sort, this claim can not possibly be infringed.

(2) *Invalidity.* The patent to Perry, No. 228,385, June 1, 1880 (p. 322), and the Hinson patent, No. 635,322, June 24, 1899 (p. 322), show that there was no novelty in the subject matter of Byers' claim 8.

The patent to *Perry* discloses the idea of making separate spacer-blocks, shaped to conform to the springs, and inserting them between the followers of a draft-rigging to limit their approach. To multiply the number of spacer-blocks so as to combine them with any number of springs which may be used, is certainly obvious.

The single claim of the Perry patent, which is a succinct statement of the invention, reads:

> "In a car-coupling having a *spring or springs,* at the rear end of the draw-bar, *one or more moving blocks,* which wholly or partially surround the spring, arranged *to relieve the same from being overworked,* substantially as herein set forth.'

The description of this old spacer-block is found in lines 42 to 52 of the Perry specification. It is clearly illustrated in Figure 3 of the drawings and in Defendant's Model Exhibit K (pp. 255-6), the spacer-block being marked "C" on the model. When placed back to back between two springs as they would be in the event of the use of two springs according to the alternative term of the Perry claim, Perry's spacer-blocks would form the exact construction disclosed in the drawing annexed to the interrogatories.

The *Hinson* patent, No. 635,322, shows, in Figure 4 of the drawing, a follower and combined spacer-block (see small aluminum model thereof, defendants exhibit L) which is an exact duplicate of that shown in Byers' drawing Figures 4 and 5, and specifically described in his eighth claim.

Either one of these patents is amply sufficient to show that this claim embodies nothing which is patentably novel. Perry disclosed the entire idea of the alleged infringement, and almost the precise structure of the interrogatories; and Hinson disclosed the exact structure claimed and illustrated.

Mr. Livermore, plaintiff's expert, candidly admitted the absence of novelty in the subject-matter of Byers' claim 8 (pp. 106-107).

XVII

CLAIMS 3, 5, 6 AND 7 ARE NOT INFRINGED.

Each of these claims is limited to a "pocket" as an essential element (*ante*, p. 25.) The Court of Appeals, disagreeing with the District Court, held that the independent cheek-plates furnished by the defendant, notwithstanding they were spaced apart and separately secured to the sills, formed the "pocket" of the Byers claims, saying (p. 355):

> "As the parts forming the pocket when it is not cast integrally are nothing but cheek-plates, and the defendant furnished cheek-plates for the device of the interrogatories, it infringes the combination of these claims."

(1) The Basis of the Erroneous Holding that Byers Patent Contemplates Cheek-Plates.

The sole basis for the holding of the Court of Appeals that the "pocket" when not cast integrally becomes a pair of independent, disconnected cheek-plates, spaced apart, as in the draft-rigging of the Boston & Maine Railroad, is the statement in the specification of the Byers patent (page 1, line 35; Rec., p. 4) that:

> "The pocket may be cast in a single piece." * * *

The Court of Appeals says of this statement (p. 353):

> "The specification shows that the patentee's conception was not limited to an integral pocket, for he there states that 'the pocket may be cast in a single piece.' "

We agree with the Court of Appeals that this statement indicates that Byers did not deem it essential that the pocket should be cast in a single piece. But we deny that this statement supports the holding that independent cheek-plates secured to the sills of a car at the sides of the draft-rigging should be regarded as the pocket element to which each of these claims is limited.

The statement that "The pocket may be cast in a single piece" means that it is *possible* to cast it all in one piece because the thing *is* a pocket or box, an entity or unit in itself. It also implies that the pocket member may be constructed of a number of pieces. But that is all it means. It does not mean that something else having none of the characteristics of the pocket or box may be substituted for the structure disclosed in the patent. It is not a disclosure of a *different* structure, but a mere direction concerning the mode of making or fabricating the pocket.

(2) The Pocket Is Not Cheek-Plates.

The pocket disclosed in the Byers patent is an integral box 3, rigidly secured to the draft-sills of the car, tying the sills together and bridging solidly the space between them so as to prevent their separation and keep the underframe square. The cheek-plates have none of the characteristics of a pocket. They are independent, not cast together or rigidly connected, but spaced apart. They do not tie the sills together; they do not fill the space between the sills and keep the underframe square; they do not provide stops engaging the upper and lower ends of the followers across their entire extent to prevent the followers from bending

and thus allowing the draft-rigging to escape from its connection with the car, but only afford short lugs overlapping the followers for a small distance on each side, leaving the followers unsupported against bending and possible escape. The cheek-plates are independent castings, separately secured to the sills and have a void between them, and a pair of cheek-plates can not possibly be cast as a single piece. If they were so united they would cease to be cheek-plates and become a pocket. It is significant that "pocket" is the term alone employed throughout the Byers patent to describe his box-like structure, and that the term "cheek-plate" or the synonymous term "draw-bar stop-casting" nowhere appears. The obvious reason for this is that the terms "cheek-plate" and "draw-bar stop-casting" were recognized terms in the art definitely signifying independent stop-plates, and Byers was distinguishing his invention from such construction. Not only were "cheek-plate" and "draw-bar stop-casting" the recognized terms of the art to describe independent members forming stops for the followers (see Reagan patent, No. 491,785, throughout, and especially page 1, line 42, and page 2, lines 13-14; Miner patent, No. 570,038, page 1, line 57, and page 2, lines 18 and 81; Pilcher patent, No. 616,965, throughout, and especially page 1, lines 60-64, where reference is made to "draw-bar stops conforming to the standard adopted by the Master Car Builders' Association")—not only, we say, were "cheek-plate" and "draw-bar stop-casting" the recognized terms of the art definitely signifying independent stop-plates, but Byers, who was a railroad man (p. 47), fully understood them. His deliberate choice of the term "pocket" clearly indicates that he intended to distinguish from a "cheek-casting" or "draw-bar stop-casting" form of construction. His testimony is that he devised a "pocket" to overcome the objectionable spreading of the sills which occurred in the old construction where "cheek-plates" were used.

Concerning the objectionable features of the *old* construction, he said (pp. 62-63):

> "Well, the wooden draft timbers, they would split and pull apart. The long yokes we had in there in those days—the tendency of the long yoke riveted onto the coupler rigidly—the tendency would be to spread those draft timbers apart, and when that occurred the followers would slide by the *cheek-plates* with the lugs, and out would come your coupler, followers, springs and all, yoke and all."

And of his own invention, designed to overcome these difficulties found in draft-riggings using cheek-plates, he said (p. 48):

> "I immediately set to work and sketched up the idea, which I later on patented; that is, I devised a *pocket* or lug casting, rather, as I may call it; and instead of having the lugs on the side, I placed the lugs above and below."

And plaintiffs' expert, being shown the cheek-plates of the alleged infringing structure, was forced to say (p. 30):

> "I don't think that, as far as the question of my use of language goes, that I should commonly call those two (cheek-plates) a pocket, or I should say they were a pocket, or may enclose a space between them like a pocket."

(3) The Prior Art Prevents the Byers Patent from Having the Broad Interpretation the Court of Appeals Has Accorded It.

If the framing of a car with cheek-plates attached to the sills were the Byers pocket, then claim 5 would be lacking in novelty.

The *Frost* patents, Nos. 510,854 and 532,272, show a "horizontal" yoke with springs and followers removable from below (*ante*, p. 13), and it is stated in the specification of the later patent (lines 43-46, p. 2) that "The coupler is usually affixed to the car through the medium of clips 27, located at its draw-bar section, or any equivalent thereof may be used" (p. 322). It is agreed by the experts for both sides (p. 102 and p. 261) that Frost's statement that "any equivalent" could be used in place of the stops shown, signifies the use of *cheek-plates* in lieu of the "clips" which the drawings of the Frost patents illustrate as stops or abutments for the followers.

The Frost draft-rigging would therefore exhibit all the elements expressed in claim 5, namely, "a yoke open at the bottom and having a spring and followers arranged between the arms of the yoke, and a *pocket* (two independent cheek-plates) within which the yoke extends and which is also open at the bottom to permit removal of the spring and followers independently of the draw-bar."

The Byers patent should not be stretched with respect to the "pocket" in order to make out a case of infringement and then be compressed by limiting the "followers" to a rectangular shape in order to make out a case of novelty; but this was done by the Court of Appeals (p. 351).

(4) The Plaintiffs' Proposal to Discriminate Between Features of the Byers Pocket.

The plaintiff's plan for limiting the "pocket" of Byers to the extent required to avoid the prior art, and yet at the same time make it possible to argue for the infringement of claims 3, 5, 6 and 7—a plan adopted in substance by the Court of Appeals (Opinion, pp. 354-355)—was presented in the following statement appearing on page 84 of

plaintiff's brief in that court, where, in respect to the *essential* characteristics of the "pocket" it was said:

> "The District Court also referred to the fact that the only new thing in Byers is the integral pocket or housing. We do not contend that Byers was the first to make an *integral pocket or housing.* That was old long prior to Byers, as is shown in the *Canda* case cited, *supra,* pp. 18-19 (124 F. R., 487). But we do contend that in the particular arrangement of parts in which the springs and followers are freely removable from below independently of the yoke and draw-bar, the container, whether it be an integral casting or made in a number of pieces, *must* have *horizontal guide-ways* for the yoke *and inwardly extending stops* against which the followers *must bear between the inner vertical faces of the yoke.* This is new, and can be found in no prior patent."

And also on page 21 of their brief, plaintiffs said:

> "Further, it would not utilize in any way *the yoke guide-ways* which are an *essential* feature of the Byers patented construction, and of appellee's embodiment of it."

It will be seen from the foregoing quotations that of all the characteristics of the Byers "pocket" plaintiffs contend that the only essential ones are that it *must have horizontal guide-ways* for the yoke *and be provided with inwardly extending stops against which the followers are adapted to bear in the precise relation illustrated in the patent drawings.* They reject and treat as *non-essential all other features* and characteristics of the "pocket" disclosed in the Byers patent.

These *guide-ways* for the yoke, alleged to be an essential and leading characteristic of the Byers pocket and put forward as a criterion by which to determine the issues of

novelty and infringement *are nowhere referred to in the specification of the patent, not a word is said about them. They are not even indicated on the drawings of the patent by any reference numeral.* Other features of the Byers "pocket," asserted to be non-essential are, however, described in the specification. The pocket is described as being made *integral;* as being *braced* by metal ribs or flanges; as having *horizontal lugs* which extend *across* the pocket from side to side; as being *open at both ends.* But the feature of the *guide-ways,* now alleged to be one of the *essential* features of the "pocket," is *not described* in the specification at all.

Concerning a patentee's omission to point out in his specification what he subsequently maintains is an important feature of his invention, this Court has well observed:

> "If this feature be an advantage, as now claimed, it is strange that no allusion is made to it in the specification. Fastener Co. vs. Kraetzer, 150 U. S., 111, 116, 14 Sup. Ct., 48."

Again, in Edge-Setter Co. vs. Keith, 139 U. S., 530, 539, 11 Sup. Ct., 621, the Court said:

> "If any separate function has been performed by this combination, it is somewhat singular that the patentee did not call attention to it in his original application, or until after the main feature of his patent was shown to have been anticipated."

(5) The Plaintiffs' First Theory of Infringement Proposes Cutting the Pocket Into Three Pieces and Discarding the Middle Part.

One theory of infringement advanced by the plaintiffs is that the alleged infringing draft-rigging of the Boston & Maine Railroad has been produced by simply dividing the

Byers pocket casting into three parts and discarding the middle part. This theory of plaintiffs' case was developed by their patent expert who suggested that the independent cheek-plates might be considered the equivalent of the Byers casting, with the central portion of the pocket removed, saying that if the middle portion of that box be "cut right out" (p. 21), "then you have the same thing as you have there" (indicating the alleged infringing structure of the interrogatories). "It would be just so much dead wood to cut that middle right out of the Byers construction" (p. 22).

Plaintiffs argue that modifying the Byers pocket in this way merely amounts to making the pocket in pieces rather than in the form of a rigid structure.

It is, of course, admitted that merely making in several parts a thing which is described in a patent as made in a single piece ordinarily does not avoid infringement; but that rule has no application here, for cutting the Byers pocket into three pieces and dispensing with one of those pieces would not be *merely* making the pocket of several pieces instead of a single casting. The result would be that the pocket would completely lose its identity and become something wholly different, departing from the teachings of the patent. Cutting the Byers pocket into three pieces and rejecting the middle part would completely alter the functions performed by the remaining portions of the pocket. Such a change would allow the followers to automatically accommodate themselves to inequalities in horizontal alinement of the parts attached to the sills (*ante*, p. 18). This is precisely the same specious argument that Miner, who sells the draft-riggings made by the National Malleable Castings Company, unsuccessfuly advanced in the case of Symington Company v. Miner (also now before this Court) in an effort to show that the Byers patent dis-

closed the same invention as the Emerick patent, under which he was sued, and therefore rendered it void. The Court of Appeals for the Seventh Circuit in disposing of this argument said (229 F. R., 735):

> "The nearest approach to Emerick is that of Byers. As above noted, appellant claims to be operating under this patent. It discloses in a unit structure much of what Emerick contends for. It was issued seventeen days before Emerick filed his application. Appellant, however, does not use the Byers structure, but does use the two counterpaart castings of Emerick. There is evidence to show that Byers' draft-rigging has practically never been used.
>
> "It is contended that there is no invention in making in two parts that which was before made in one. Byers never contemplated the counterpart casting either in his present patent or in his two subsequent patents. His present device could not be cut in two and produce Emerick's counterpart cheeks and other features of the patent in suit. It would require readjustment. The difficulty of alignments would make it practicaly impossible."

(6) Plaintiffs' Second Theory of Infringement Brings in the Car Sills and Attached Spring Guides to Make Up the Pocket.

Another theory of infringement has also been put forward by the plaintiffs. In their brief in the Court of Appeals (p. 26) they point to the curved or bowed plates or sheets of metal attached to the sills of the car and extending above and below the springs for maintaining the latter in place (see print annexed to answer to interrogatories; p. 124; and sketch *ante*, p. 28), and say that these plates together with the center sills of the car and the cheek-castings riveted to the inner faces of the sills, provide in effect

a pocket casting. This, we submit, is going a very long way to spell out an infringement. The sills and bowed plates riveted to them to hold the springs in position are parts of the car construction; and the plates are bent and arched so that they may readily yield, for the car structure is flexible under the strains to which it is subjected.

The alleged infringing draft-rigging of the Boston & Maine Railroad Company has no part which has any resemblance to the pocket of the Byers patent.

The plaintiffs' patent is not entitled to any broad range of equivalents. The art is a crowded one; there is no room for a generic patent; all the existing patents are of the most specific character. The terms of the specification and claims as well as the crowded condition of the art make it indispensable to the validity of these claims that they shall be strictly limited, in respect to the pocket element, to the integral or rigid box casting shown and described in the Byers patent and claimed "substantialy as described."

CONCLUSION.

There are some matters which, though we do not regard them as controlling, merit brief comment.

(1) The defendant's position fundamentally is that of non-identity of the Byers patented structure and the alleged infringing draft-rigging. The question of priority of invention as between Byers and Emerick, the inventor of the specific form of draft-rigging alleged to infringe, is secondary.

(2) The plaintiffs have put forward a false issue by instituting comparisons between an alleged "Byers" commercial form of draft-rigging (in reality Miner's copy of this defendant's draft-rigging patented to Emerick) and the draft-rigging of the Boston & Maine Railroad, the alleged

Byers "commercial" form being unlike the draft-rigging of the Byers patent.

It is a truism, of course, that the issue of infringement should be determined by a comparison of the *patent* alleged to be infringed and the alleged offending machine. A comparison of the alleged offending machine with something which involves a departure from the device that is disclosed in the patent is an improper comparison. Bates v. Coe, 98 U. S., 31-49; Sickles v. Gloucester, 4 Blatch. 229; Fed. Cas., 12841.

(3) By loose statements the witness Johnson confuses the draft-rigging of the Byers patent with the integral pocket castings used on locomotive tenders (pp. 89-91). This creates the impression that, beyond the ten experimental draft-riggings Byers speaks of (p. 61), the draft-rigging of the Byers patent has actually been manufactured and sold.

When Mr. Johnson is called upon to produce (p. 97) illustrations of the pockets for tenders to which he has referred, they turn out to be (Defendants' Exhibit P) pocket castings wholly unlike the Byers casting and not intended for use in the Byers draft-rigging at all, but constituting a part of a form of draft-rigging of the *vertical* yoke type from which the springs could not be removed without taking the whole draft-rigging off the car (pp. 97-98). This testimony, and particularly the fact that these devices referred to have none of the functions which plaintiff's claim for the draft-rigging of the Byers patent, only serves to accentuate Byers' testimony that none of the Byers draft-riggings have ever been used commercially.

(4) One of the merits which the plaintiffs claim for the draft-rigging which is alleged to be the "commercial" form of the structure shown in the Byers patent is that the draw-bar, being connected with the yoke by an easily removable key, may be taken down, if injured, without the necessity of disturbing the rest of the draft-rigging.

An inspection of the drawings of the Byers patent (p. 4) shows that the yoke and coupler are not connected in a way permitting them to be readily disassociated. In Figures 1 and 2 of the drawings the yoke and draw-bar are connected by two rivets, which would have to be cut before the draw-bar could be removed; in Figures 6, 7 and 8 the yoke and draw-bar are riveted together by a single rivet of key-like form, which would have to be cut; and in Figures 10, 11 and 12 the yoke and draw-bar are connected by the standard key of the American continuous draw-bar system. It is the American continuous draw-bar structure, with its side rods linking the keys together, that plaintiffs allege discloses a conveniently removable key connecting the draw-bar to the yoke.

The draw-bar is not conveniently removable in the American continuous draft-rigging, as the rods (19 of the Byers patent) must be released when these keys are taken out to change the coupler. These rods are nearly as long as the cars (p. 26), about forty feet, strong and heavy enough to sustain the draft of the whole train, and at the same time they are flexible. To be effective *they must be tight*. To replace them so that they are sufficiently tight to serve their function, which is that of taking the tension stress off of the under-framing of the car, and simultaneously to hold them up to a horizontal position so as to pass the keys through them, is a Herculean task, a comprehension of which is sufficient to efface any impression that a draft-rigging of the American continuous type can possibly be classed as one having a conveniently removable draw-bar. Byers undertakes to say (p. 56) that the replacement of the American continuous rods on their keys "would be a very small matter. A man could do that very easily, with one hand." This statement hardly agrees with that of Johnson, plaintiff's witness, who says (p. 82):

> "I have noticed it frequently in yards that cars, wherein the key connecting the side links to a coupler, were bent so badly that they could not be driven out, and it was necessary for the repair men to saw them off. And there are times even if the key is not bent; in fact, very frequently they are worn to such an extent that it makes it difficult to remove them.

Byers' statement that the removal of the American continuous draft key and the replacement of the American continuous rods is a "one hand' operation, is contradicted by everyone else who touched upon this point. (See Sandman, pp. 162-3; Weston, p. 288; Decker, p. 254; Livermore, pp. 26-27.)

Finally, it is submitted that the decree of the Circuit Court of Appeals holding infringement and directing the injunction and an accounting was error and should be reversed, with directions to enter a decree dismissing the bill of complaint, with costs of all courts to the defendant.

Respectfully submitted,

MELVILLE CHURCH,
GILBERT P. RITTER,
W. S. SYMINGTON, JR.,
ERNEST F. MECHLIN,
Counsel for Petitioner.

INDEX OF SUBJECTS.

	PAGE
Synopsis of argument	1
The subject matter in controversy	6
"Draft-rigging" defined	6
"Draw-bar" "	6
"Draft-sills" "	6
"Yoke" "	6
"Followers" "	6
The Byers patent in suit	8
The defendant infringes	11
It contributed essential parts of the patented combinations	12
The claims are infringed	16
The "pocket" of the claims	17
The prior patents	21
A general review of those patents	21
Perry patent 228,385	21
Frost patents 510,854, 532,272	22
Reagan patent 491,785	24
Simons patent 627,540	25
Miner patent 570,038	27
The Emerick patent	28
His conception and disclosure	31
Byers' conception and disclosure	39
Notes on Petitioner's Brief	53

Index of Cases.

	PAGE
Acme Keystone Co. vs. Dearborn, 185 Fed. Rep., 303	20
Automatic Weighing Mch. Co. vs. Pneumatic Scale Co., 166 Fed. Rep., 288	30
Bonsack Machine Co. vs. Underwood, 73 Fed. Rep., 206	13
Canda vs. Michigan Malleable Iron Co., 124 Fed. Rep., 487	14
Christie vs. Seybold, 55 Fed. Rep., 76	31
Crown Cork & Seal Co. vs. Aluminum Stopper Co., 108 Fed. Rep., 845	20
De Laski & Thropp vs. Fisk Rubber Co., 203 Fed. Rep., 986	32
Diamond Meter Co. vs. Westinghouse, 152 Fed. Rep., 704	52
Emerson & Norris Co. vs. Simpson, 202 Fed. Rep., 747	32
General Electric Co. vs. Sutter, 186 Fed. Rep., 637	14
Herman vs. Youngstown, 191 Fed. Rep., 597	20
Leeds & Catlin Co. vs. Victor, 213 U. S., 325	14
N. Y. Belting & Packing Co. vs. Gutta Percha Co., 56 Fed. Rep., 264	13
Robinson on Patents, Vol. III., Sec. 1191	13
Sessions vs. Gould, 49 Fed. Rep., 855	13
Smeeth vs. Fox Copper Co., 130 Fed. Rep., 455	13
Standard vs. Caster, 213 Fed. Rep., 162	19
Thomson-Houston Co. vs. Ohio Brass Co., 80 Fed. Rep., 712	14
Vicksburg Water Works vs. Vicksburg	13
Walker on Patents, 407	14
Westinghouse Electric & Mfg. Co. vs. Stanley, 116 Fed. Rep., 641	13
Westinghouse Machine Co. vs. Press Pub. Co., 127 Fed. Rep., 822	13
White vs. Heath, 10 Fed. Rep., 291	13

Supreme Court of the United States,

OCTOBER TERM, 1917.

No. 226.

THE T. H. SYMINGTON COMPANY,
Petitioner,

vs.

THE NATIONAL MALLEABLE CASTINGS COMPANY and J. J. BYERS,
Respondents.

BRIEF ON BEHALF OF RESPONDENTS.

This case comes before this Court on a writ of *certiorari* to the United States Circuit Court of Appeals for the First Circuit.

The opinions of the Circuit Court of Appeals are reported in 230 Fed. Rep., 821, and 234 Fed. Rep., 343, the latter being on rehearing. The same opinions appear at pages 348 and 366 of the Transcript.

The Circuit Court of Appeals sustained claims 3, 5 and 6 of the Byers patent 673,419 in suit, and directed an injunction and accounting with reference to them. Claims 1, 2, 7, 8 and 10 were held invalid or not infringed.

The T. H. Symington Company, defendant below, then petitioned this Court for a writ of *certiorari* which was granted.

The Byers patent in suit is to be found at page 4 of the Transcript.

We shall confine our discussion to Claims 3, 5 and 6 which were held to be valid and infringed.

I.

Synopsis of Argument.

The National Malleable Castings Company, one of the plaintiffs, in putting on the market devices under the patent in suit, has introduced into extensive use a draft rigging adequate for the demands of the railroads and car builders, in that the draft rigging (necessarily a very heavy structure) is of such a character that it can be put in place on the car and taken down piecemeal, the shock absorbing mechanism being capable of being put in position after the other parts of the draft rigging have been mounted on the car, and being removable without disturbing the remainder of the draft rigging. Byers, by the invention set forth in the patent in suit, was the first to devise a draft rigging presenting such capabilities.

The shock absorbing mechanism, shown in this case as a pair of springs arranged one above the other, is so arranged between the draw-bar and the parts rigidly connected with the car, that, no matter whether the car is pulled or pushed, the springs will be compressed between the draw-bar and the car, and the shocks of such pulling or pushing—which are very great, sometimes exceeding 700,000 pounds on a single draft rigging—are taken up or minimized by the springs.

All of the parts are made very strong and are therefore very heavy ; in plaintiff's and defendant's devices (which are identical) the coupler weighs 300 pounds, the yoke 112 pounds, the springs 55 pounds and the followers 60 pounds each, making a total of nearly 750 pounds—a very great weight to be put in place and adjusted under a car if all of it has to be mounted at one time. And owing to the tremendous strains to which the draft rigging is subject when in use, the parts, though heavy and strong, break frequently, and this makes their capacity for ready replacement a matter of first importance. It is not an *easy* matter, in any event, to replace them, because of the

limited space under the car and the weight of the draft rigging which, as we have said, is nearly 750 pounds.

The defendant's infringing acts, upon which this suit was based, consisted in the agreement which it made in August, 1913, to furnish specially constructed parts (cheek castings and spacer blocks) to the Pressed Steel Car Company for installation on cars of the Boston & Maine Railroad, which parts were intended to be assembled in such a way as to make up the combination of the patent in suit and were capable of use for no other purpose. In accordance with this agreement, the parts were, during March and April, 1914, furnished by the defendant to the Pressed Steel Car Company, and applied by it—in the manner contemplated by the defendant—to car underframings constructed for the Boston & Maine Railroad. These parts furnished by the defendant are exactly like those used in the Byers commercial form of rigging, and are exactly and only the parts which plaintiff sells in putting the Byers device on the market.

The plaintiffs' successful and widely used commercial structure is substantially identical with the embodiments of the invention shown in the drawings and described in specification of the patent in suit, practically the only difference being that the casing over the shock absorbing mechanism, which the specification says *may* be constructed in one piece, in plaintiff's commercial form is made of a number of pieces solidly riveted together. The defendant has copied *exactly that structure* and is now attempting to appropriate the market which plaintiffs and their customer, W. H. Miner, have established for the Byers device.

The infringement arose in the following manner :

Miner, plaintiffs' customer, sent to the Boston & Maine Railroad in 1914 (in connection with an order pending or being filled) a drawing showing the Byers' rigging, and defendant later obtained from the Railroad a copy of this print, which bore the inscription " Arrangement Miner spring draft

rigging with key connection", and made an agreement in August, 1913, to furnish in accordance with that print cheek castings and spacer blocks, which are the essential parts of the Byers device, adopting the Miner-Byers construction with painstaking fidelity as to practically every detail.

Defendant, in spite of so slavishly copying the Byers commercial rigging, seeks to escape infringement on the ground that it has two separate castings for supporting the rigging, while the form *shown* in the patent is, as the patentee says, *preferably* constructed in one piece, and is referred to as a pocket. But defendant is unable to point out any difference in function between the Byers device of the patent and the Miner-Byers commercial device, which it has appropriated. In other words, the commercial form of the Byers device embodies the substance of the invention, and defendant's device, being identical with the Miner-Byers device, must be held to be an infringement of the patent in suit.

The defendant in its answer has cited some nineteen patents, but has relied upon only nine of them. Three of these patents, *i. e.*, those of Hinson, Simons and Emerick, were all issued after Byers' proved date of conception in February, 1899, so none of these three patents can be considered as a part of the prior art. If the construction of these patents could be considered at all, it would only be if these patents showed the invention in issue and if the patentees had made that invention prior to the date of Byers' invention; but such facts are not proved, and neither the patents nor the structures shown in them were a part of the prior art at the time Byers made his invention.

None of these patents mention the essential and vital feature of the Byers construction—that is, the "free removability of the springs and followers from below from between the arms of the yoke" and the supporting structure in which they are contained. But the defendant by distorting the con-

struction of these patents and of their disclosures, seeks to convince the Court that it is free to furnish the essential parts of plaintiff's patented combination.

Defendant also urges that it is operating under the Emerick patent No. 693,643, filed May 24, 1901, and that Emerick is the prior inventor of the subject-matter in issue. That patent is involved in the suit of *William H. Miner vs. The T. H. Symington Company*, No. 170, October Term, 1917, now pending before this Court.

Defendant has attempted, by the testimony of Emerick and that of two witnesses called in the effort to corroborate him to carry back his date of invention prior to Byers, who filed more than a year prior to Emerick, namely, on April 21, 1900. The testimony absolutely fails to accomplish this purpose. Byers, on the other hand, has clearly established that he made the invention during February, 1899; that he disclosed his invention to two corroborating witnesses, E. N. Byers and McGill, during the late winter or early spring of 1899, and carried it through promptly to completion. These witnesses all identify a model (the second that was made) which was constructed in the fall of 1899 for Byers by George White, who also testified and identified it; this model is produced. Further, a number of letters written by Byers in December, 1899, to The National Malleable Castings Company, describing his invention, were produced and identified. It is obvious, therefore, that not only has the defendant failed to satisfy the heavy burden of proof imposed upon it, but also that the preponderance of proof is strongly in favor of Byers, who produces tangible, contemporaneous proofs of his work.

II.

The Subject Matter in Controversy.

The patent in suit is for a "draft-rigging" for railroad cars, and relates to the structure by which cars are coupled together and by which the shocks and jars of pushing or pulling the train are transmitted from car to car.

All railroad cars must, of course, be capable of being joined or "coupled" together, to form a train, and for this purpose a coupler is provided at each end of every car, the coupler on the end of one car engaging the coupler on the adjoining end of the next car. If each coupler were attached to its car rigidly, there would be excessive strains or shocks when the engine tried to start the train or stop it, so, for many years, it has been customary to provide some yielding or cushioning devices between each coupler and the car to which it is attached. This mechanism, as a whole, is called a **"draft-rigging."**

Each draft-rigging is secured to or between two long frames, or beams, extending lengthwise of the car and below the floor; those parts of those beams which are at each end of the car, where the draft-rigging is attached, are called **"draft-sills."**

The most prominent part of the draft-rigging is the **"draw-bar,"** the coupler on the outer end of which extends beyond the car and interlocks with the coupling on the outer end of the draw-bar on the next car. At its rear end the draw-bar is fastened to the ends of a rearwardly extending strap of U-shape, which is called a **"yoke,"** and embraces or surrounds two **"followers"** (the function of which will presently be described) and also surrounds the spring or cushioning mechanism which takes up or minimizes the pushing and pulling shocks as these are transmitted from one car to another.

The draw-bar and yoke, though secured together, are not rigidly fastened to the car, but are merely loosely supported from the car framing in such a way as to be permitted to move backward and forward for a space of five inches against the action of the shock-absorbing mechanism (which, in the devices in suit, are two springs), that mechanism being held within the yoke and compressed under *both* pulling and pushing strains. This compression takes place between the two "followers," one of which is at each end of the springs; the ends of the followers (extending above and below the space embraced by the yoke) bear against stop-shoulders or lugs, which are rigid with the car. That is, the front follower on its forward side bears against stops which restrain its forward movement but permit it to move rearwardly, while the rear follower on its rearward side bears against stops which restrain its rearward movement but permit it to move forwardly.

In "*buffing*," that is, where the cars are being pushed together, the inner end of the draw-bar will push the forward follower against the forward ends of the springs, and as the springs at their rear ends are held against *rearward* movement by the rear follower which engages the rigid rear stops, the rearward movement of the front follower will compress the springs and the buffing shock will thereby be taken up. In *pulling*, the draw-bar will pull the yoke forwardly, and with it the *rear* follower which the yoke surrounds, thus compressing the springs against the forward follower, which in turn is held against movement by the forward stops.

It is obvious that it must be very difficult to put into place a heavy structure of this character (weighing nearly 750 pounds) if all of it has to be lifted and attached as one piece, and also that in such devices, each one of which is frequently subjected to excessive shocks in the operation of freight trains (Tr., p. 83), there must be frequent occasion for repair or replacement (Tr., pp. 80–81). At the time Byers entered

the field, the mounting of these heavy draft riggings and the repairs and replacements were effected with extreme difficulty, because the yoke had been arranged to go around the top and bottom of the springs and was riveted to the top and bottom of the coupler, so that to remove any of the parts it was necessary to take down from the car the whole draft rigging, weighing nearly 750 pounds, which necessitated handling by a gang of men. It normally took several hours to effect repair or replacement of any one of the parts (Tr., p. 48).

Byers' solution of the problem was to devise a construction in which the parts could be put up and taken down piecemeal, and in which the parts which require most frequent renewals, namely, the springs and followers, were very readily accessible and could easily be removed and replaced without disturbing the remainder of the rigging. The practical advantages of the Byers rigging are set forth by Johnson (Tr., pp. 81–83).

III.

The Byers Patent in Suit.

Byers, in arriving at the solution shown in the patent in suit, arranged his yoke 2′ horizontally, that is, with its arms at the *sides* of the springs 7, 7′, and the arms were secured at their forward ends to the *sides* of the draw-bar 2. His cushioning mechanism consisted of the two springs 7, 7′, arranged one above the other and placed between the two followers 6, 6′, which, also, were surrounded by the yoke. The springs 7, 7′ were separated from each other by a spacer block 8, which supported the upper springs and acted as a stop to prevent too great compression of both springs. Byers' yoke 2′—arranged *horizontally*—is supported in

longitudinal guideways (shown in Figs. 2 and 3, but not numbered) in the casing attached to the draft sills of the car. These longitudinal slots or guideways afford an extended bearing for the yoke, and thus prevent excessive wear on any one point on the yoke or casing, and hold the yoke in alignment with the spring and followers. The springs 7 7′, arranged one above the other, and the followers 6 6′ on end, may be freely inserted into the loop of the yoke 2′ vertically from below, and are retained in such position by a cover plate 9, which has a bearing on the bottom spring, and so holds the springs and followers in position. The *inwardly extending stops* or *lugs 5 5*, against which the upper and lower portions of the followers bear, and the guideways for the yoke, are in a supporting casing. *It is essential, in order that the followers 6, 6′ may be freely removable from below that they do not extend out beyond the inner vertical faces of the yoke, and therefore the stop lugs 5, 5, in order to provide a bearing for the followers must extend inwardly between the inner vertical faces of the yoke so as to provide bearings for the followers.*

Byers says in his patent (p. 1, line 36) that the casing "*may* be cast in a single piece." Obviously the casing or container might be made in any number of pieces, as the Byers patent recognizes; that is merely a structural, not an operative or essential, matter.

Byers shows a number of ways of connecting the draw bar and yoke. In Figs. 1, 2 and 3 they are shown to be riveted together; in Figs. 5, 6, 7 and 8 they are shown as attached by a rivet-key 11, and in Figs. 10, 11 and 12 by a removable key 17. Obviously, to permit the withdrawal of the spring and followers from below, it was immaterial how the draw bar and yoke are fastened together, as the fastening means, whatever it may be, does not have to be removed for this purpose; but to remove the draw bar separately it was clearly an advan-

tage to use a removable key of the type shown in Figs. 10, 11 and 12.

In the showing of Figs. 10, 11 and 12, Byers foresaw the coming of the steel center sills of the present day construction as indicated by his metal draft arms 13, which may be cast integral with each other and with the pocket, an effect realized to-day in plaintiff's cheek castings, which are solidly riveted to the deep center sills of the car, with the result that the center sills and cheek castings are practically one piece. In other words, in his patent, Byers says the pocket "*may* be cast in a single piece," and in his commercial device he has a stru ture fundamentally identical with that of the patent, in which the pocket is made of center sills, cheek castings and tie bars across the top of the sills, all of which are solidly riveted together and constitute a single entity when applied to a car.

The claims sustained by the Circuit Court of Appeals are 3, 5 and 6.

Claim 3 is as follows:

> "A draft-rigging having a pocket, lugs, extending horizontally across the pocket at the upper and lower portions thereof respectively, followers within the pocket which bear against the lugs, and a yoke which extends within the pocket between the lugs and around the rear follower; substantially as described."

The means by which the movable parts are attached to the car is here specified as "a pocket," by which reference is made to the casing 3 which the specification says *may* be made in one piece. The "lugs extending horizontally across the pocket at the upper and lower portions thereof respectively," are bearings for the followers directly above and below and between the side arms of the yoke. The yoke extends within the pocket, that is, its arms bear in the *longitudinal guideways* in the sides of the casing and between

the lugs or bearing for the followers. And the yoke extends around the rear follower.

In claim 5 the yoke is described as being "open at the bottom," and "the pocket within which the yoke extends" is also open at the bottom, to permit removal of the springs and followers independently of the draw-bar, thereby implying that the followers must be wholly contained between the vertical inner faces of the yoke arms as otherwise they could not readily be removed.

Claim 6 brings in, as a feature distinguishing it from the other claims, the element of "a detachable closure for the opening in the pocket," which is the part 9 mentioned in the specification.

IV.

The Defendant Infringes.

The Byers device of the patent in suit was put on the market in commercial quantities by the plaintiff through its customer, William H. Miner, at least as early as June, 1910 (Tr., p. 34, Q. 17), and over 50,000 of the devices in question were sold prior to the trial (Tr., p. 36, Q. 33). Not only were these devices of the patent marked with the date of the patent (Tr., p. 35), but the record shows also that the defendant knew of the Byers-Miner rigging prior to the time (August, 1913) at which it entered the field, since, in its answer to plaintiff's interrogatories (Tr., p. 8), it attaches a print which it obtained from the Boston & Maine Railroad, which bears the inscription "*Arrangement Miner spring draft rigging with key connection*," and, during August, 1913, it agreed to manufacture cheek castings and spacer blocks, which, as is shown in the detail prints an-

nexed to the interrogatories, were substantially identical, line for line, with the *cheek castings* and *spacer blocks* manufactured by plaintiff and sold by Miner for a number of years prior to this time. These are the very parts, and the only parts, which the plaintiff makes and sells, it being the practice for the car builder and the railroad to furnish the other parts and assemble them (Tr., p. 35).

The agreement which defendant admits it entered into with regard to furnishing such cheek castings and spacer blocks for installation on Boston and Maine cars was with the Pressed Steel Car Company, who manufactured the center sills to which these cheek castings were intended to be attached. The answer to plaintiff's interrogatories (Tr., p. 7) set forth that prior to the filing of the bill in October, 1913, the defendant had not actually manufactured any of the cheek castings or spacer blocks which it had contracted to furnish, but plaintiffs' witness Lewis, in April, 1914, visited the plant of the Pressed Steel Car Company at Pittsburgh and saw a carload of cheek castings and spacer blocks being unloaded (Tr., p. 45). These cheek castings and spacer blocks were identical with the cheek castings and spacer blocks shown in the detail blue prints annexed to the interrogatory answers, and bore tags (Tr., p. 46) indicating that they had been manufactured by the Symington Company, the defendant. Lewis also saw cheek castings and spacer blocks being attached to center sills and assembled as completed draft riggings, which were like those shown in Plaintiff's Exhibit 5, showing defendant's device (Tr., p. 45).

It therefore appears that not only did the defendant agree to commit acts of infringement prior to the filing of the bill, but also that these acts were in fact subsequently completed in accordance with that agreement.

The Petitioner, defendant below, does not now, as appears from its brief filed in this Court, deny that its *agreement and preparation* to commit the acts, alleged to constitute infringe-

ment, are sufficient to give the Court jurisdiction. It is indeed, well established that courts of equity can and do, grant relief against threatened infringement. See

Vicksburg Water Works Co. vs. Vicksburg, 185 U. S., 82.

Robinson on Patents, Vol. III., Sec. 1191.

Parsons Non-Skid Co. vs. Seneca, 192 Fed. Rep., 46.

Sessions vs. Gould, 49 Fed., 855, 856 (affirmed 2nd C. C. A., 63 Fed., 1001).

Smeeth et al. vs. Fox Copper & Bronze Co. (C. C. A., 3rd Circuit), 130 Fed. Rep., 455.

N. Y. Belting & Packing Co. vs. Gutta Percha and Rubber Mfg. Co., 56 Fed., 264.

White vs. Heath, 10 Fed., 291, 294.

Westinghouse Machine Co. vs. Press Pub. Co., 127 Fed., 822, 827.

Bonsack Machine Co. vs. Underwood, 73 Fed., 206, 211.

Westinghouse Electric & Mfg. Co. vs. Stanley, 116 Fed., 641.

The defendant appropriated the plaintiff's structure with full knowledge of the situation. In manufacturing the parts which it sold, it did so from a drawing furnished it bearing the title "Arrangement Miner Spring Draft Rigging with Key Connection." This drawing it obtained from the Boston & Maine Railroad, which copied it from one of Miner's drawings, and defendant necessarily knew, when it made the agreement to furnish the parts in question, that it was furnishing parts exactly like those being sold to railroads by plaintiffs' customer, Miner, under the patent in suit. It is also to be remembered that the plaintiffs, in supplying the Byers device to their customer, William H. Miner, and Miner, in selling these devices to the railroads and the car building companies, supply only the *cheek castings* and the spacer blocks (both of which this defendant supplied) and the railroad or car builder supplies the other elements necessary to complete the operative device which is set forth in the claims of the patent in suit (Tr., p. 80).

The cheek castings after being supplied to the railroad or car builder are riveted to the steel center sills; and there the other elements of the device are assembled and applied to make up the completed whole. It was the intention of the defendant that the parts furnished by it should be used in connection with the Byers construction, as is substantially admitted in the answer to Interrogatory No. 6, which is in part as follows (Tr., p. 7):

> "The draft rigging parts, namely, cheek plates and spacer blocks, which we agreed to furnish while they were capable of being otherwise utilized, could be assembled in accordance with the blue print attached to the interrogatories *and are preferably so assembled.*"

The assembly drawing attached to defendant's answer to plaintiffs' interrogatories shows the construction with which these parts were designed to be used (Tr., p. 8), and, as is stated by plaintiffs' witness, Johnson, they could only have been used in such a construction, which is that of the patent (Tr., p. 37). That this is sufficient to establish infringement is well settled. See

Canda vs. Michigan Malleable Iron Co., 124 Fed., 487, 489 (C. C. A., 6).
Thomson Houston Co. vs. Ohio Brass Co., 80 Fed., 712, 721, 723.
Leeds & Catlin Co. vs. Victor, 213 U. S., 325, 332-3.
General Electric Co. vs. Sutter, 186 Fed., 637, 638.
Walker on Patents, Section 407.

For convenience of comparison, we have set forth below drawings of the structure shown in the Byers patent in suit, and the construction furnished by defendant which is an exact copy of plaintiff's commercial form, and upon these illustrations we have applied the names used to designate the parts as they are stated in the claims of the patent in suit.

These illustrations show views from one side of the devices, but only one draft-sill is shown and some of the parts of the draft-rigging are broken away so that the internal construction may appear.

BYERS' STRUCTURE.

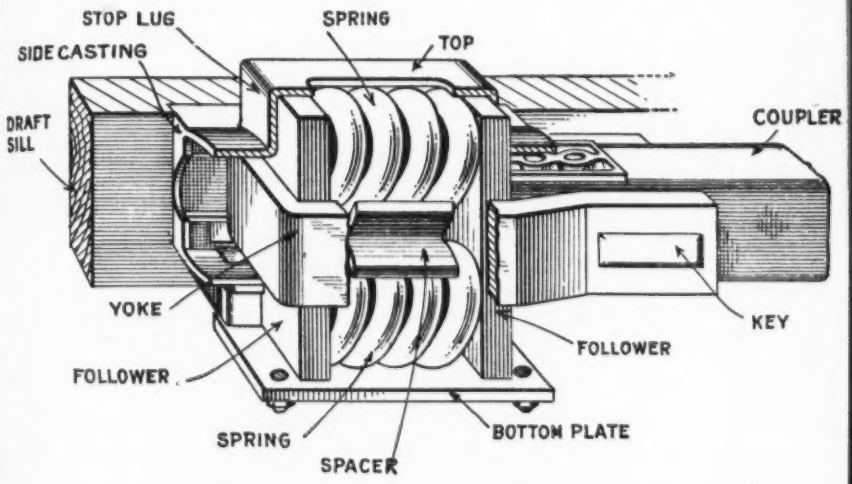

DEFENDANT'S STRUCTURE.

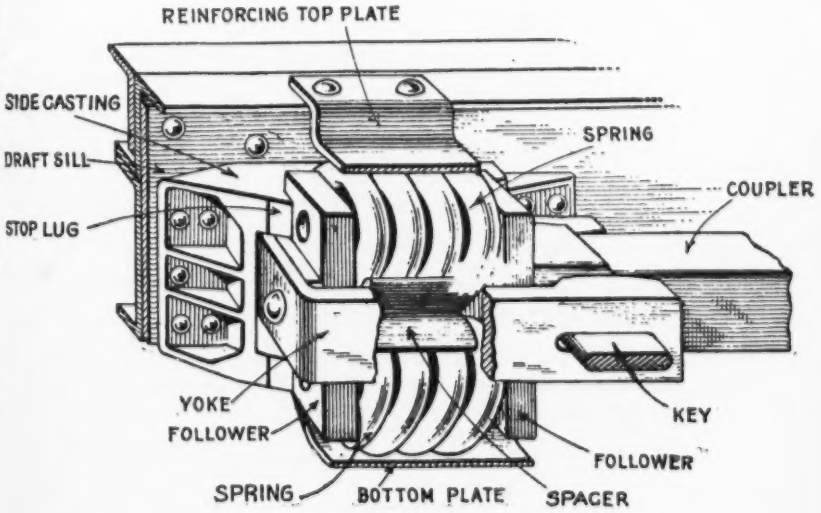

Also, we here insert further illustrations of the structure shown in the patent and of defendant's construction, these being the views one would obtain by cutting across the devices and looking at the cut portion. The illustration of the Byers device corresponds to Fig. 3 of the patent, while that of defendant shows a similar section corresponding to the upper right hand figure of the assembly print produced by appellee (Tr., p. 8).

In both instances full instead of half sections are shown.

As is specified in claim 3, the defendant's cheek or "side-castings" when riveted to the center sills as shown in the illustrations, furnish—

> "*a pocket, lugs extending horizontally across the pocket at the upper and lower portions thereof respectively* [for] followers *within the pocket, which bear against the lugs,* and a yoke which *extends within the pockets between the lugs* and around the rear followers."

Also, defendant's cheek, or side, castings, when arranged in the manner shown in defendant's assembly print, which we have here illustrated, form an essential part of the structure described in claim 5, which specifies

> "a yoke, open at the bottom [that is, with the arms arranged horizontally] and having a spring and followers arranged between the arms of the yoke, and *a pocket within which the yoke extends and which is also open at the bottom to permit the removal of the spring and followers independently of the draw-bar.*"

So, also, defendant's cheek, or side, castings, when assembled in the manner contemplated and shown in defendant's assembly print of our illustration, are an essential part of the structure of claim 6, to wit:

> "a yoke open at the bottom and having a spring and followers arranged between the arms of the yoke, *a pocket which contains the yoke, and is also open at the bottom to permit removal of the spring and followers,* and a detachable closure for the opening in the pocket."

SECTION OF BYERS' STRUCTURE.

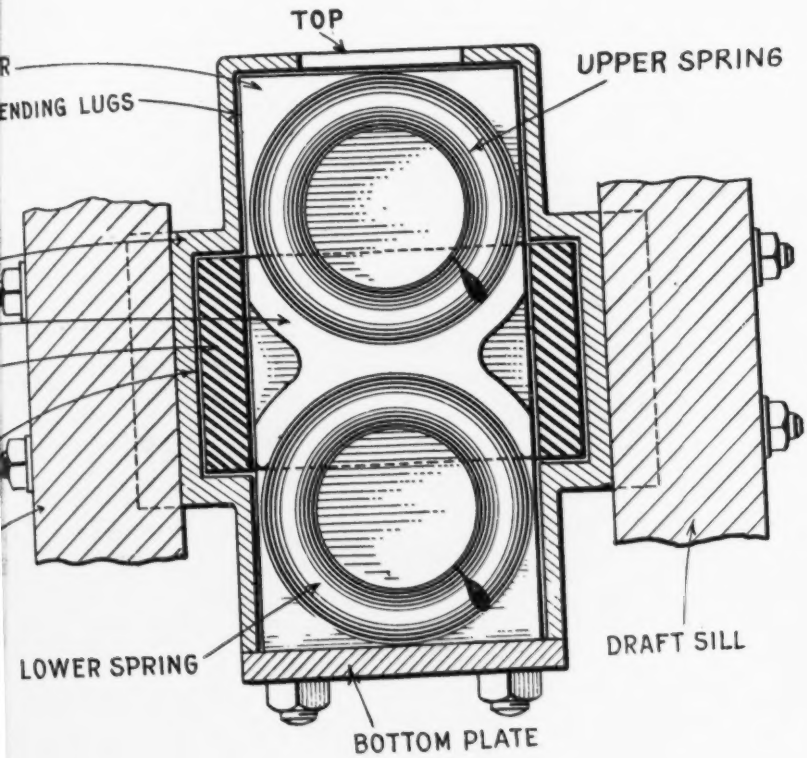

SECTION OF DEFENDANTS' STRUCTURE.

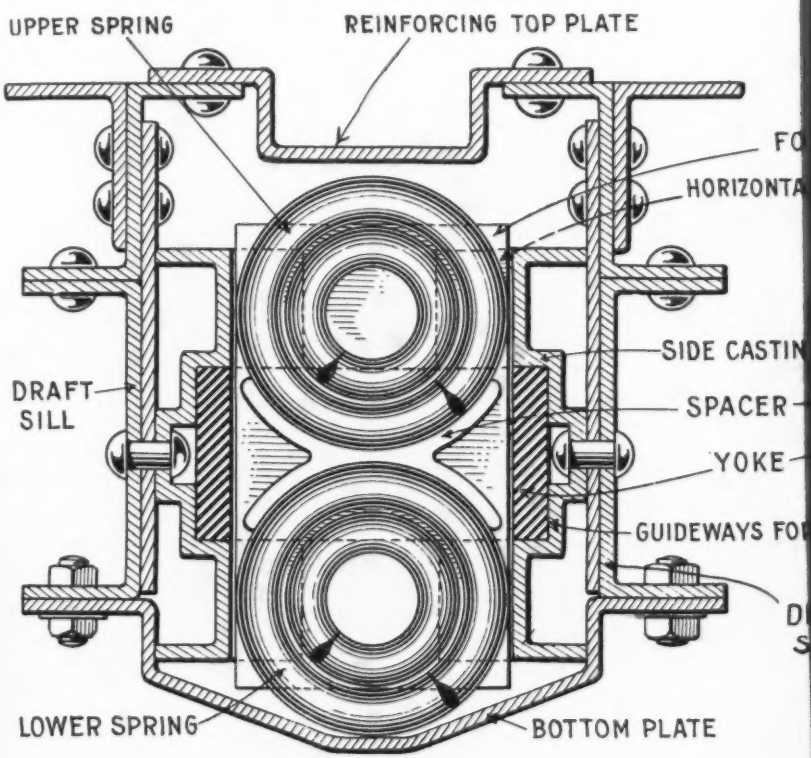

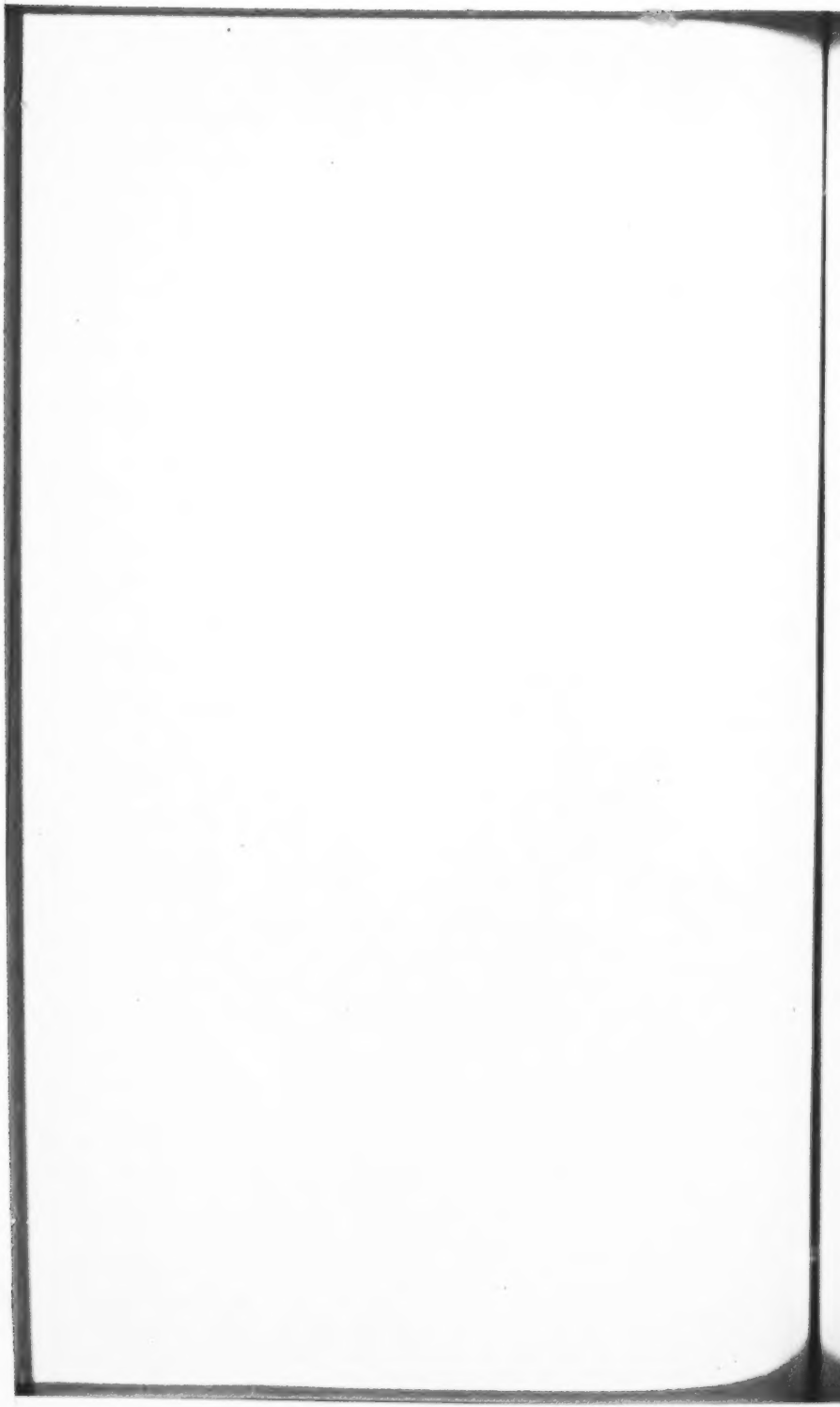

Defendant has raised only one question on the merits as to the infringement of the claims, and that is as to the meaning of the word " pocket," mentioned in claims 3, 5 and 6. It contends that these claims are specifically confined to the *single* pocket casting illustrated in the Byers drawings. But obviously Byers did not intend to confine his invention to any such construction, since he states (p. 1, line 36) : " The pocket *may* be cast in a single piece."

Defendant, in manufacturing cheek castings intended to be solidly secured to the deep center sills of the car construction shown in our illustrations, provided a pocket, the top of which was supplied by riveting the " top plate " to the side sills, and the bottom of which consisted of the removable " bottom plate," so that, in the print showing the intended construction, all parts of the Byers' construction are shown co-operating to produce their intended functions in the rigging. The defendant's construction is like that illustrated in the Byers patent in everything except that Byers shows the integral casing, which he says *may* be cast in one piece, while defendant's modern up to date copy of plaintiff's commercial form is made of a number of pieces rigidly riveted together (Tr., p. 21).

It is interesting to note, in connection with the meaning of the word " pocket," that claim 9 specifies " a *single* pocket," so Byers apparently intended to cover specifically *in that claim* a pocket consisting of a one-piece casting—his then preferred form ; but he does not use that expression in the other claims and this shows that claims 3, 5 and 6 were not intended to be limited to a pocket made of a single piece casting.

Obviously, in view of the fact that the elements of the construction operate and co-operate in exactly the same way whether the pocket is in one or many pieces, there can be no merit in any contention that Byers was limited to a pocket casting made in one single piece, unless, during the prosecu-

tion of the application in the Patent Office, he intentionally so confined his claims that the defendant's counterpart castings, which it copied from plaintiff's commercial device, are not to be considered as a form of the Byers casing (which he *preferred* to construct as a single piece casting), or at least a full equivalent of it. Examination of the Byers file history (Tr., pp. 133 *et seq.*), will show that no limitation as to a *single pocket casting* was adopted by Byers, and his claims will therefore cover a construction such as defendant's, in which the operative parts are arranged in substantially the same way and perform the same functions as in Byers.

Nor can defendant successfully urge that its separate cheek, or side, castings are not an equivalent of the Byers casing. It appears from the decision in *Canada vs. Michigan Malleable Iron Co.*, that the casing there under consideration was a single pocket casting, and as was said by the Court (123 Fed., 95, 96):

> "*The casings or boxes* in which are placed the springs and follower of the drawbar *have been constructed integrally or in parts*, which are fastened together and then attached to the longitudinal draft timbers or sills of the cars, as each inventor preferred."

So both the single pocket and a built up pocket were old; the Byers invention related not to the details of structure of the pocket but to the organization in which a pocket—whether made of one integral piece or of many pieces—was present to co-operate with the other elements.

The "single-pocket" casting was not, as is shown by the Byers patent itself, to be the fundamental idea of the invention, and Byers did not confine his claims to it. *The only claim which is specifically limited to such construction is claim 9, which is not in issue in this suit.*

If it is necessary to apply the doctrine of equivalents, which is not the case, as we believe that the defendant's construction is *the thing* defined by the claims in suit, the doc-

trine stated in the case of *Lang vs. Twitchell*, 207 Fed., 363, 369, may well be applied, as follows:

> " Primary inventions are entitled to a looser application of the doctrine of equivalents than secondary inventions; but even secondary invention is entitled to invoke the doctrine of equivalents, although to a more limited extent. The doctrine of equivalents applies to all classes of inventions. Walker on Patents, Sec. 359; Robinson on Patents, Sec. 258; McCormick v. Talcott, 20 How., 405, 15 L. Ed., 930."

The Byers' invention is, of course, entitled to a range of equivalents—and, whether the invention is broad or narrow, the defendant's form of structure is obviously an equivalent, even if not regarded (as we think it should be regarded) as the very thing specified in the patent. Clearly, making a thing in two pieces does not avoid infringement (see *Standard vs. Caster Co.*, 113 Fed., 162, 169).

It is of course true that the Byers patent *shows* a one-piece box or pocket, and that the defendant's cheek plates, when considered alone and apart from everything else, would not constitute a pocket. Mr. Livermore, plaintiff's witness, properly said that what Byers showed was a one-piece casting, termed in the Byers patent a pocket, for that is what the patent called it. With regard to his statement concerning defendant's cheek-plates, considered alone and without reference to the position they would occupy on a car, what he said was (Tr., p. 30).

> " x-Q. 66. Would you call that a pocket, Mr. Livermore? (Witness' attention is called to a device marked for identification Defendant's Exhibit H).
>
> " A. No, I should not call that casting by itself a pocket.
>
> " x-Q. 67. Would you call these two castings a pocket?
>
> THE COURT: Showing another like " H "?
>
> MR. PHILLIPS: Showing defendant's Exhibit I.
>
> " A. I don't think that, as far as the question of my use of language goes, that I should commonly call

those two a pocket—*or I should say they were a pocket, or may enclose a space between them like a pocket.*

"x-Q. 68. They certainly are not a pocket, which is a thing in itself.

"A. They don't make a single thing enclosing a space."

When, however, he refers to the complete thing, that is, Plaintiff's Exhibit 3, Model of Defendant's device (Tr., p. 31), he says:

"x-Q. 76. What does that that you call the bottom plate do? A. It covers the bottom of the space between the cheek plates that contains the springs and followers; *in other words, encloses the bottom of the pocket so that they cannot get out.*"

The parts when assembled in such arrangement clearly do constitute a pocket.

Of course, the fact that the defendant claims to be manufacturing under a later Emerick patent furnishes no justification for appropriating the Byers invention, upon which the Emerick patent may be a detailed structural improvement.

See

Herman vs. Youngstown Car Mfg. Co., 191 Fed., 579 (C. C. A., 6).

Acme-Keystone Mfg. Co. vs. Dearborn, 185 Fed., 503, 505 (C. C. A., 2).

Crown Cork & Seal Co. vs. Aluminum Stopper Co., 108 Fed., 845, 866 (C. C. A., 4).

So the defendant, clearly, is infringing. And the patent in suit is valid, as we shall now show.

V.

The Prior Patents.

Defendant has referred to eight patents issued prior to the patent in suit, which are as follows :

Perry, 228,385.
Hinson, 635,322.
Frost, 532,272.
Frost, 510,854.
Reagan, 491,785.
Simons, 627,540.
Miner, 510,038.
Pilcher, 616,935.

Defendant has not adduced a line of competent proof to show that any of the devices of these patents have ever been used commercially, while plaintiffs have shown affirmatively that none of them have been so used (Tr., pp. 84–86).

Of these patents those of *Hinson* and *Simons* patents were issued on October 24, 1899, and June 27, 1899, respectively, and the defendant has referred also to an *Emerick* patent, which was not filed until May 24, 1901—thirteen months after Byers' filing date. As Byers' invention is proved to have been made in February, 1899 (as we shall show), none of these three patents can be considered to be a part of the prior art.

Neither of the prior patents exhibits the combination or advantageous functions of the device of the patent in suit. Nor do any of them refer in any way to the function of "free removability of springs and followers from below" nor describe a construction which can be utilized in such a way.

The *Perry patent No. 228,385 of 1880*, shows an obsolete form of draft rigging, never used commercially, in which no yoke is employed. The bar D has a rear extension *a* which

is encircled by the spring, and this extension *a* passes through holes in the follower plates against which the ends of the spring bear. The followers carry the weight of the draw-bar, springs and spring protector blocks C, and are in turn supported by the bottom plates or carry irons *d*. When the carry irons *d* are removed, it is obvious that the draft ringing *as a whole* will fall to the ground, and the only way in which the springs and followers could be removed from below without taking the draw-bar with them, would be, first, to disconnect the draw-bar from the followers by removing the pin or nut *g* and then sliding the draw-bar to the left. Whatever method of procedure were followed, it is impossible to remove the spring and followers without also removing the draw-bar. This would, perhaps, be no disadvantage in the case of such a light structure as Perry obviously had in mind, but it is an enormous disadvantage in the case of large, heavy structures such as Byers was obviously dealing with. Perry bears no relation whatever to the problem of removing spring and followers from below without disturbing the draw-bar (see Livermore, Tr., p. 102).

The *Frost patents Nos. 510,854 of 1893, and 532,272 of 1895* relate to a peculiar form of coupler, and merely show a conventional representation of a draft rigging proper. The only resemblance to Byers is the horizontal yoke. But, as is shown in the sketch below, the followers project outwardly beyond the yoke in order to afford a bearing against the stops *outside* of the yoke. Frost lacks that distinctive feature of the Byers patent in which the followers bear against stop members *between* the inner vertical faces of the yoke.

FROST DRAFT GEAR.

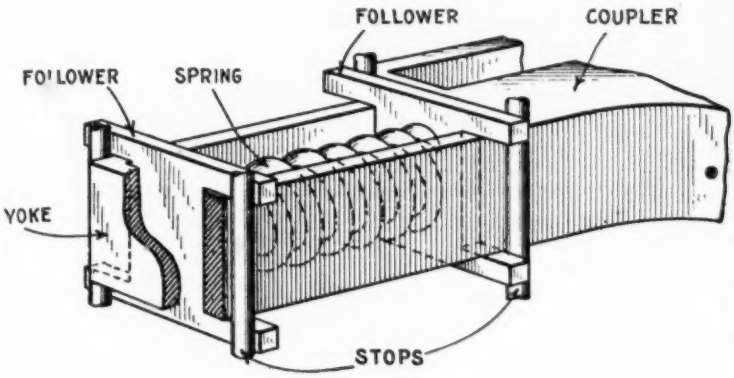

Defendant's expert Decker, in his direct examination, does attempt to urge that the Frost patents were directed particularly to the draft rigging, saying, that the draft rigging followers were referred to as *slides* in line 4 of claim 3 of the Frost patent No. 510,854, but on cross-examination he was compelled to admit that he was wrong in this (Tr., p. 283, x-Qs. 75, 76).

Decker also admitted that the device shown in the Frost patents was inoperative since there could be no effective buffing action because the shoulder on the draw-bar would immediately strike against the stop 27, and prevent the draw-bar from moving to the rear (Tr., pp. 281-2, x-Qs. 57-63), and that there was nothing in patent No. 532,272 *to hold the springs in place*, so that they would fall out unless some means was provided to hold them in (Tr., p. 282, x-Qs. 65-69), and that, aside from the lugs shown projecting inward from the followers in Figs. 5 and 6, there was nothing in patent No. 510,854 for holding the springs in place. Decker also admitted that the spring and followers could not be removed as a unit (Tr., p. 282, x-Qs. 70-72), one of the advantages of Byers' construction.

Mr. Livermore, in discussing the pertinence, or, rather, lack of pertinence, of the Frost patents, said (Tr., p. 102):

> "By a sort of juggling process, Mr. Decker showed how you could get them [the followers] out, by taking the spring out from between them, and then turning them around endwise, and then slipping them down through. Even at that you could not take one out at a time, that is, you could not—you cannot turn one of those around endwise, unless you turn them both, and get space enough to get it out.
>
> "* * * you can very handily juggle it over with this model, but it would be much more difficult if the follower should weigh fifty or sixty pounds, more or less.
>
> * * * * * *
>
> "in most of the figures there is nothing shown to keep the springs in place. They would simply drop out.
>
> "Now, in Figures 5 and 6 of the patent 510,854 there are those lugs or projections * * * on the face of the follower plates that would center the springs and keep them from dropping out, but by the same token it would make it very hard to get the springs out or in. If that spring is unbroken, you have got to compress it, and these springs are pretty hard things to handle that way. You have got to compress it enough to crowd it past those lugs. I think that is all I have to say about the Frost."

The *Reagan patent No. 491,785 of 1893* is for a draft gear with a *vertical* yoke secured to the draw-bar by a vertically-extending key. The device is supported on cheek castings, and, carried on shoulders *r*, there are horizontally movable followers which carry the yoke. A tie-plate C acts as a bottom plate and ties the cheek castings together. Reagan does purport to show a device in which a broken draft spring or followers may be replaced. He states (p. 1, line 100; page 2, line 2) that "the separation of the parts may be readily accomplished, without disturbing the draw-bar, *by simply withdrawing them backward* after *removing* the pins referred to as sustaining the tie plate and *means for connecting the draft rigging with the draw-bar*."

To take the springs and follower out, the tie-plate C is unbolted and removed, and the pin *x* is taken out and the key E withdrawn. *Then the yoke is moved backward a distance equal to its length, until it is clear back of the rear follower, after which the spring may be taken down and the followers are finally turned endwise and taken out.* This is not the unitary withdrawal from below of springs and followers spoken of in Byers. Nor is it independent of or without disturbance to the draw-bar in the sense mentioned by Byers, since to effect a withdrawal of springs and followers the yoke must be disconnected from the draw-bar, which permits the rear end of the draw-bar to drop down, while in Byers the yoke remains connected to and in operative relation with the draw-bar. Defendant's witness Decker, on his direct testimony (Tr., pp. 263-4), attempts to convey the impression that the spring and followers are removable from below, independently of the draw-bar, in the manner contemplated by Byers, and that the yoke is connected *to the sides* of the draw-bar and not to its top and bottom, both of which inferences are contrary to the fact. On cross-examination, however, Decker admits that the Reagan yoke is a vertical yoke. So the device could not possibly operate as does that of Byers (Tr., p. 283).

Decker also says that " a plate C is provided * * * to retain the spring in place," but as to this he is mistaken, as, on cross-examination, he is compelled to admit (Tr., p. 283, x-Qs. 81-83).

Mr. Livermore's comment on Reagan is to be found at page 103 of the Transcript.

The *Simons patent No. 627,540 of June 27, 1899*, shows a draft rigging with a *vertical* yoke riveted to the draw-bar. The springs are twin springs arranged one beside the other (instead of one over the other as in Byers), and are supported on and bear against horizontally-extending followers. The followers seat in slots or large openings in the center sills which must be

cut away to accommodate them. The size of these openings, to admit springs and followers of the same size as those used in defendant's device, would be 8½ inches by 11⅞ inches, which would very seriously weaken the center sills. It would be practically impossible to remove the springs and followers, even after taking off the angles 13, without taking off the car wheels, as the wheels would interfere if it were attempted to drive the spring and followers out sideways. Then, too, if the springs and followers were of the same character as those used in petitioners' and respondent's riggings, they would weigh about 230 pounds—not an easy weight to move sideways and handle under the adverse conditions necessarily existing. And Simons says nothing at all about his construction resulting in making springs, followers or any other parts accessible. They obviously could not be removed from below.

Plaintiffs' witness Johnson explains the difficulties of removing the springs and followers of Simons (Tr., p. 87).

The defendant's argument is that if the Simons device is rotated 90° it becomes the Byers structure. The argument is ridiculous, since then the draw-bar, having also been rotated, could not intercouple with an opposing coupler, and the center sills would also have to be rotated, so that they would cease to act as center sills, or would require a reconstruction of the car. Defendant's expert Decker admits, on cross-examination, that the argument is untenable (Tr., pp. 283–4, x-Qs. 84–94).

Mr. Livermore sums up the discussion concerning Simons at page 104 of the Transcript.

Defendant attempts to show that Simons' construction is a practical and commercial form, but his witnesses do not bear him out. Defendant's witness Sandman says (Tr., p. 170) that he does "not recall having seen such a draft gear applied to a car." Also he says (Tr., p. 171, x-Q. 43) that "while this design is practical, it would probably be *more expensive* to make the application in the manner shown than could be done otherwise."

Defendant's witness Trimyer, in his direct examination, stated that he had seen a number of draft gears of the Simons type in operation. On cross-examination, however, he says that he does " not remember exactly the plan of application " (Tr., p. 184, x-Q. 30).

It is obvious that Simons contains no suggestion of the problem to which Byers directed his attention, nor of its solution.

The *Miner patent No. 570,038, of 1896*, shows a draft rigging of the vertical yoke type with tandem springs and horizontal followers, in which the lower arm of the yoke is bolted on to the coupler and to the remainder of the yoke. The springs and followers can be taken down from below by first unbolting the guide plates G^2, and then taking the yoke to pieces by removing four bolts *c'*. This will disconnect the yoke from the draw-bar, and permit the rear end of the draw-bar to drop downwardly, it being supported *only* at its forward end by the carry iron A^3.

Miner's yoke is attached to the top and bottom of the draw-bar and not to *its sides*, and his springs and followers are not " removable from below independently from the draw-bar," since the yoke and draw-bar must be disengaged in order to permit any such removal; this means taking off a part of the yoke and leaving the draw-bar unsupported so that it, too, will fall out of place at its rear end.

As is stated by Johnson (Tr., p. 85), if the Miner device ' has been in service a short time the bolts would be bent up, and the threads spoiled to such an extent that it would be practically impossible " to take the nuts off. Mr. Livermore discusses the Miner patent at page 104 of the Transcript.

We have now considered all of the prior patents and it is manifest that they merely emphasize the fact that Byers succeeded in accomplishing something which was really new. *And the fact that none of the devices of these patentees have ever been used commercially* (Tr., pp. 84-86) *serves to*

make the fundamental character of Byers commercially successful invention the more apparent. The various patents, taken together, show that those working in the art had at hand all of the separate pieces of apparatus which Byers used—they had draw-bars, yokes, followers, spacer blocks and springs, and they had casings—both made integral and in two pieces—for suspending the draft rigging under the car. Yet none of these prior inventors knew how to put those parts together to obtain the functions and results first announced by Byers, who made a new combination, causing the parts to co-operate in a new way to produce a new result which appellee insists upon copying.

And defendant really admits that the prior patents do not, in fact, afford any defense for its appropriation of the Byers combination. For it urges that the combination which it is using is *not* one set forth in the prior patents but in an Emerick patent which it owns and which was issued subsequent to the patent in suit. Defendant asserts that Emerick made the combination in question before Byers did. But that is not the fact.

VI.

The Emerick Patent Under Which Defendant Seeks to Justify its Infringement.

The Emerick patent No. 693,643, application for which was filed May 24, 1901, is for a draft rigging, and the object of the invention is stated to be that (page 1, lines 63–67)

> " the coupling arm or bar may be readily removed and replaced in case of breakage without the necessity of removing, taking apart, or replacing the draft rigging."

To affect this, as in Byers, the yoke 21 is disposed horizontally and is connected to the *sides* of the drawbar 20 by a horizontally extending key 21. In Figs. 1, 2, 3 and 4 the springs 26 and 27 are placed one above the other in vertical twin arrangement and are secured to the followers 22 and 23, which are set on end, by bolts 24 and 25, which extend through both followers and springs and have nuts beyond the rear face of the rear follower 22, which lie in the same vertical plane as the rear end of the yoke and permit the removal of springs and followers from below *only* after disconnecting the draw-bar from the yoke and withdrawing the yoke rearwardly. This leaves the rear end of the draw-bar unsupported. Emerick's yoke is supported by stop shoulders 40 and 31, which correspond to Byers' lugs 5, 5, but Emerick has not in his side portions or counterpart castings 10 and 11 the *Byers* longitudinal *guideways* (used in appellant's and appellee's commercial devices) within which the yoke extends. Emerick followers 22 and 23 bear and slide on the guide flanges 28 attached to the bottom of each counterpart casting, while in Byers and in the commercial devices, the followers are supported by the springs and the springs in turn are supported by the closure plate.

It will therefore be seen that the chief difference between Emerick and Byers are that Emerick has not longitudinal guideways or recesses in the side portions of the supporting castings within which the yoke extends; that the Byers closure plate 9 is lacking in Emerick, and that Emerick's bolts prevent taking out the vertical twin springs and followers from below without disconnecting the draw-bar and yoke. *So the defendant has not, in fact, followed Emerick in making the devices complained of, but has strictly followed the Byers patent and the plaintiff's form and embodiment of that patent.*

But, if we assume that the two patents are for the same invention, let us see which of the two parties was the first inventor.

Byers conceived the invention in February, 1899; Emerick

(assuming his story is credible, which we deny) in the spring or summer of 1899. Neither Byers nor Emerick actually reduced to practice prior to filing their respective applications, but Byers made models which are proved. Byers filed on April 21, 1900; Emerick filed more than a year later, namely, on May 24, 1901. Byers' patent issued on May 7, 1901; Emerick's on February 18, 1902.

The rule as expressed by the Circuit Court of Appeals for the First Circuit in the case of *Automatic Weighing Machine Co. vs. Pneumatic Scale Co.*, 166 Fed., 288, 292, is as follows:

> "When two patents for the same invention have been issued to independent inventors, we understand the rule to be that the dates of their respective inventions are, first, the dates of the patents; second, the dates of the application, provided the application sufficiently describes the invention; third, the dates of actual reduction to practice; fourth, the dates of conception; with this qualification, that, if either patentee seeks to carry the dates of his invention back to the date of his conception, he must show reasonable diligence in adapting and perfecting his invention, either by actual reduction to practice or by filing his application."

Applying this rule (1) Byers patent was first to issue, (2) Byers was first to file, (3) Byers was first to reduce to practice (constructive reduction by filing), and (4) Byers was the first to conceive, and he was diligent.

It is apparent that Byers must prevail, unless Byers has not, and Emerick has, shown diligence in perfecting his invention. Even if Emerick's story is true to the effect that he conceived, disclosed and made a model of his invention in the spring or summer of 1899, he certainly did nothing more for two years—that is, until the spring of 1901, when he says that a few weeks before filing, he made two other models, one of a twin spring gear like Figs. 1, 2, 3 and 4 of his patent, and the other of a tandem spring gear like Figs. 5, 6 and 7 of his patent. He alleges poverty as an excuse for his lack of diligence. But he

was unmarried and his salary was $90 a month; he says he was assisting in the support of a sister and had no money to spare to pay for the preparation of an application. But he does not show that there was any change in his financial condition by the time that, in May, 1901, he actually did file his application. Surely it is not a very convincing story, nor one likely to be effective in persuading this Court to overturn the Byers Patent issued two weeks before Emerick filed, and the application for which was pending in the office for thirteen months, during which time Emerick let his idea lie idle. Even if he did not have funds for filing an application, he must, as Master Mechanic of the Commerce Dispatch line, have had every facility for applying his invention to the cars he was repairing, and thereby reduce it to practice, yet he did nothing.

Emerick does not even attempt to show that he tried to interest others in his invention nor that he did anything with it from the date of his supposed conception in the spring or summer of 1899 until the spring of 1901. Nor does he make any adequate explanation as to why he could not have saved enough to pay for the application out of a salary of $1,080 per year. Nor does he show that he had no other resources (see *Christie vs. Seybold*, 55 Fed., 69, 77 (6th C. C. A.).

It will therefore appear that, assuming the truth of Emerick's story, and that of his supposedly corroborating witnesses, his delay of approximately two years between conception and filing is fatal to his case, since Byers, regardless of when he conceived the invention, perfected it by the filing of his application on April 21, 1900—thirteen months prior to Emerick's filing date.

Emerick's Conception and Disclosure.

When we examine the testimony by which it is attempted to carry Emerick's date of invention back to a time prior to Byers' filing date, we find that Emerick has not complied with

the rules which apply when the contest is between two inventors or in a case of an anticipating prior use, particularly when, as in the case at bar, a long period of time has elapsed since the events in controversy took place. See

The Barbed Wire Patent, 143 U. S., 284–5.
Emerson & Norris Co. vs. Simpson, 202 Fed., 747 (1st C. C. A.).
DeLaski & Thropp vs. Fisk Rubber Co., 203 Fed., 986 (1st C. C. A.).

At most it can be said only that Emerick's proof is supported by the testimony of some witnesses relating to matters many years previous, the matters testified to having occurred some time between 1899 and 1901, and the testimony being taken from thirteen to fifteen years later. This oral testimony is not at all supported by concrete, visible, cotemporaneous proofs which speak for themselves, nor do the proofs identify Emerick's alleged disclosure with the Byers' invention.

Emerick's so-called ante-dating proofs consist of his own testimony and that of two witnesses, Darrach and Wright, all of whom had testified, as to these matters, in January, 1914, in the case of *William H. Miner vs Symington*, now pending in this Court. In the present case, we have taken the testimony of Julian, one of the stenographers who took the testimony of Emerick, Wright and Darrach in the last-mentioned suit, for the purpose of impeaching the testimony of those witnesses. Julian's deposition shows that their testimony taken in the Miner suit in January, 1914, was glaringly contradictory of their testimony in the present suit.

Even if the testimony of Emerick, Darrach and Wright was not of such a vague, evasive and contradictory character as to make it inherently unbelievable, and even if it is accepted as true, and the Byers' antedating testimony disregarded, Emerick's alleged conception and disclosure has no bearing upon the particular structure in controversy, to wit: a twin spring draft rigging with the springs arranged vertically, one above

the other, which, with the followers, are removable from below, independently of the draw-bar. Emerick's first model was a "tandem" rigging (Tr., p. 208) with the springs arranged end to end in the same horizontal plane, and this was the idea he disclosed to Wright (Tr., p. 208). Just what was disclosed to Darrach is not certain. And Emerick did not make a model of the rigging with the springs arranged one above the other until just prior to filing his application on May 24, 1901 (Tr., p. 235). Hence it appears that Emerick until about a year after Byers filed on April 21, 1900, did not have in mind the use of the vertical spring arrangement of Byers.

Emerick's story of his conception of the invention is extremely vague. He at one time (Tr., p. 230, Qs. 3 and 4) says that he "conceived the idea of this invention * * * along about 1899 * * * along about the first part of the year. In answer to Q. 100 (Tr., p. 237 and see p. 118) he admits that in the Symington-Miner suit he testified "I first conceived the idea of that invention in the summer of '99."

Again, Emerick says (Tr., p. 240, Qs. 126, 128, 134 and 135) that he left the employ of the Commerce Despatch Line in January or February, 1901, and that he conceived the invention possibly fifteen or eighteen months prior to that time, which would bring the date between July and November, 1899. He says (Tr., p. 230, Qs. 10 to 12) that he showed the model to C. S. Darrach and W. S. Wright about March or April, 1899. Darrach says it was at a place called Hegewisch that he saw the first model, but Darrach did not first begin to go out to the shops at Hegewisch until "late in the summer or early in the fall of 1899" (Tr., p. 217, Qs. 5 and 6). The time book shows that Wright went to work on April 3 (Emerick, Tr., p. 231, Q. 19), so the disclosure to him could not have been in March, and Wright says (Tr., p. 192, Q. 72) that Emerick showed him the model during the summer of 1899, contradicting himself as to this in his answer to Q. 117 (Tr., p. 197), when he says the invention was

fully disclosed to him and the model shown him in the month of May.

Darrach's testimony also is interesting, since he states that the first time he met Emerick was in the spring of 1899 (Tr., p. 217, Q. 9), at the offices of the Commerce Despatch Line, in the Monadnock Building, in Chicago. He goes on to say as to the disclosure of the invention disclosed to him (Tr., p. 218, Qs. 15 to 17):

> "A. I think the first time I ever saw Mr. Emerick he spoke to me about a patent draft rigging which he was then perfecting—calling attention to the reduced cost and labor which his draft rigging would cause, as compared with the other draft riggings which we then had on our cars.
>
> "Q. 16. Did you understand the invention as it was disclosed to you?
>
> "A. Why, I remember it in the—in the important details of it.
>
> "Q. 18. Did he show you a model at this time?
>
> "A. Yes, sir."

Upon cross-examination, he says (Tr., p. 223, x-Q. 74):

> "About the first time I think I ever saw Mr. Emerick he spoke to me in the course of some conversation * * * that when he got his draft rigging completed that the cost of repairs on draft rigging would be very materially reduced. I was interested in the repairs which were being made to the cars *and he naturally, without revealing just what his invention would be, told me as above stated.*"

So here, in this first interview, there was no disclosure of the invention. He further says, on cross-examination (Tr., p. 224, x-Q. 85):

> "It was not a great time from the time I first met Mr. Emerick until I went out to the shops, and I do not remember whether it was the first occasion or the second occasion that he showed me *some* model."

Darrach was first a stenographer and, a few months after moving to Chicago in the spring of 1899 was promoted to be Superintendent of Car Service. He does not remember

(Tr., p. 223, x-Q. 77) whether Emerick's disclosure was before or after he became superintendent of Car Service.

So whatever invention was disclosed to Darrach by Emerick, the disclosure cannot be placed with any certainty as being earlier than the fall of 1899, and from Darrach's testimony it is impossible to determine definitely what the invention was that Emerick first disclosed to him. No credence can be given to Darrach's testimony, as it is too vague, indefinite and contradictory, and his testimony in the suit against Miner was just as vague (Tr., p. 115, Q. 12).

He does not remember (Tr., p. 225, Q. 95) how many keys the first model had, nor whether the springs were tandem or twin (Tr., p. 225, Qs. 96 and 97). He saw the second model at the time Emerick's application was made, but does not remember the difference between the first and second models, nor does he remember (Tr., p. 226, x-Q. 109) whether the second model had followers or not, although he presumes it did, and (x-Q. 110) he does "not remember the details as to the various parts contained in this (second) model" nor does he remember (x-Q. 111) how the springs were held in position. He says (x-Q. 112) that the springs in the second model "were removed by taking out the key, which released the springs and followers." Such a construction does not correspond to anything in the Byers combination, nor does Darrach remember (x-Q. 114) how many keys there were in the second model.

W. S. Wright testifies that he entered the employ of the Commerce Despatch Line in March or April, 1899. The time book shows that it was April 3, 1899. He attempts (Tr., p. 197, Q. 117) to show that Emerick's disclosure to him was in May, 1899. But this was not the purport of his testimony in the *Miner* suit (Tr., p. 117, Q. 15).

Wright also contradicts his own testimony as follows (Tr., p. 192):

> "Q. 72. You have said that you first went with the Commerce Dispatch Line in March or April, 1899, when did he show you the model?

"A. During the summer of 1899.

"Q. 73. And when, as near as you can tell, did the conversation on this subject take place?

"A. Well, it's—I couldn't give you the date or the exact time. I know it was in the summer, because it was shortly after I went to work for them."

Then he goes on to say that the fact that they were working on repairing *American continuous gear* at that time and also the entries in the time books helped him to fix the date of the disclosures (Tr., p. 196, Qs. 110–114). But this does not agree with his previous testimony in the Miner suit for Wright there testified (Tr., p. 117, Qs. 13, 14):

"'Q. You were discussing with him at that time some questions of difficulty in removing that particular gear of the American Continuous Type from cars, as I understand you?'

"'A. No. sir.'

"'Q. So that the difficulty you were discussing was simply a question of wear of parts, was it?'

"'A. Yes, sir.'"

Wright admits on cross-examination (Tr., p. 201, x-Q. 152) that there is nothing in the books that told anything, except that he worked for the Commerce Despatch Line on certain days, and during the times credited in the book, and that they do not show (x-Q. 155) the particular days when Wright or anyone else worked on repairing American continuous rigging. They were having trouble with the American continuous rigging during the entire time Wright was employed (x-Q. 140), and hence neither the time books nor the fact that he remembers that it was in connection with repairing American continuous rigging helps Wright to set the date of Emerick's first talk with him.

What Wright may have seen or what Emerick may have told him prior to 1900 is extremely vague, but whatever it was that Wright learned, it is obvious that it was not a complete disclosure of the invention for the reason that he admits that the

invention was not fully disclosed to him until May, 1900, which was after Byers' filing date. His testimony is (Tr., p. 216):

> " Re-d. Q. 341. When was the invention first fully disclosed to you, giving the month as near as you can ?
> " A. I believe I stated previously the month of May.
> " Re-d. Q. 342. What year ?
> " A. 1900."

So it is immaterial what the previous disclosure was, as long as it was not complete, and since the *complete disclosure* was not until after Byers' filing date.

Wright saw only one model (Tr., p. 202, x-Q. 193), and that was the first model, and he saw it only once (Tr., p. 212, x-Q. 296), and discussed it only once with Emerick (x-Q. 295), and from time until January, 1914, he did not talk with anybody about it. In 1914 he first talked about it with Mr. Samuels of counsel for defendant (x-Q. 298), and Mr. Samuels showed him the Emerick patent No. 693,643 (x-Q. 301), and Wright says (x-Q. 299):

> " He showed me, I believe, the same papers that we have here to-day—similar papers. But I said at the time that *it did not agree with the model that Mr. Emerick showed me.*"

Wright also says that he bases his recollection of the time when he saw the model as being in the year preceding the time at which he succeeded Emerick as foreman of repairs for the Commerce Despatch Line. It therefore becomes important to ascertain when Wright succeeded Emerick. He says (Tr., p. 196):

> " Q. 108. You have referred to an entry by Mr. Emerick in July, 1900. Does this mean anything particular to you ?
> " A. Well, it shows the last entry that he made in this book in July, 1900.
> " Q. 106. Why, in your opinion, are there no more entries in his writing in that book ?
> " A. *It shows to me that he left the Company at that time.*"

All further entries in the time book after July, 1900, are in Wright's handwriting (Tr., p. 195, Q. 104), but there are only ten pages of Wright's entries in the book (Tr., p. 203, x-Q. 174), and the first four pages are not dated as to month or year. Reference to the Almanac Calendar (Tr., p. 150), however, shows that the days of the month on these four pages correspond to October and November, 1901, and as the fifth and sixth pages are dated "November, 1901," all of these entries *must* have been made at that time. The book therefore does not corroborate Wright in the particular in question, but it seems to corroborate him when he said that Emerick left the employ of the Commerce Despatch Line (Tr., p. 188, Q. 11) "along the summer of 1901," Emerick's own testimony being to the effect that it was during the early part of 1901 that he left the employ of the Company. So if Emerick's disclosure to Wright was in the year preceding the time Emerick left the employ of the Commerce Despatch Line, the disclosure was obviously made in 1900, as it was in the fall of 1901 that Wright succeeeded Emerick as foreman and not in 1899.

The first model, which was a very small and rough affair (Tr., p. 210, x-Qs. 266 and 7), probably 5″ or 6″ long, and 1″ to 1½″ to 2″ wide, was a *tandem* type with the springs arranged one in the rear of the other. Between the springs the device was secured by a transverse key, which was fixed in the draft sills, and Wright admits that this made the device inoperative (Tr., p. 211).

Wright also admits that the tandem rigging shown in Figs. 6 and 7 of the Emerick patent would not work (Tr., p. 212).

The character of Emerick's testimony is not persuasive. For instance, he says that he "probably" talked to Wright "about the invention in April" (Tr., p. 231, Q. 25). Moreover, as to any disclosure to Darrach, he says that "I *probably* showed him the model and discussed the proposition with him along about March or April, 1899."

Emerick says (Tr., p. 236, Q. 84) that the drawings of the patent illustrate the later model, but on cross-examination (Tr., p. 241, x-Q. 149) he said it is not so.

It therefore appears that Emerick's testimony is inconclusive and that his supposedly corroborating witnesses contradict him in many essential details. The Court will find that most of the answers of the three witnesses, Wright, Darrach and Emerick, were brought out by grossly leading questions; and that no documentary, cotemporaneous evidence was produced which bears on or corroborates Emerick's testimony as to his conception and disclosure. The time books show nothing beyond the fact that Wright entered the employ of the Commerce Despatch Line on April 3, 1899; that Emerick kept a time book up to July, 1900, although he did not leave the employ of the company until some time during 1901; that while Wright made entries, none of them are identified by date prior to November, 1901; and that Darrach made entries in another time book in September, 1899. It is reasonable to suppose that Emerick was still in the employ of the company in May, 1901, for we find that Darrach, one of his co-employees, was a witness to the application which was executed on May 22, 1901. In the absence of the production of records, or other documentary evidence which of itself fixes the date of Emerick's conception and disclosure, the Court must conclude that Emerick did not, prior to at least April 21, 1900, Byers' filing date, make the invention and use diligence thereafter to reduce it to practice.

Byers' Conception and Disclosure.

Byers' proofs concerning the conception and disclosure of his invention present a very decided contrast to the vague, contradictory, unsupported and misleading statements of Emerick and his supposedly corroborating witnesses. They present a connected and fully proved story.

In the latter part of February, 1899, Byers was an assistant foreman working on the Burlington system in the repair yards at Cameron, Missouri. In that month, immediately following a particularly hard job in taking down and replacing the draft rigging on a car, which also necessitated the removal and replacement of the cheek plates or casing, Byers conceived the idea of obviating the difficulties of repair and replacement inherent in such constructions by arranging the parts in the relation set forth in the patent in suit. He followed this up immediately by disclosing the invention to E. N. Byers, McGill and Easter (who is now dead), in making sketches of it and in completing a model in March, 1899. The method of attaching the bottom plate was not satisfactory to him, and he worked several months on various means of securing the bottom plate to the casing. In the fall of the year, when he had obviated this difficulty, he made a second and better finished model (Plaintiff's Exhibit No. 10) which was completed early in December, 1899. This he submitted in the same month to The National Malleable Castings Company, sending them by a letter of December 17 (Plaintiff's Exhibit 11, Tr., p. 126) a complete description of the device. He visited their office in Chicago in December, 1899, found them interested in his invention, returned in January, 1900, and arranged for the preparation of an application, which was filed on April 21, 1900. Decidedly a very different story from that of Emerick, and one which the Court can have no reason to doubt, particularly in view of the character of proofs presented on behalf of Byers.

His corroborating witnesses are E. N. Byers, the foreman, under whom he worked, John F. McGill, the yard master, and George White, a carpenter who came to work on March 6, 1899.

The particular instance which led to the invention in question was the difficulty that Byers' "partner", Marion Easter, had in replacing a draw-bar in coach No, 1, which, as the first

time book shows (Tr., 65), took place on February 16, 1899. Byers explains (Tr., p. 48), that

> " This coach, in particular, had draft lugs (cheek plates) which were solid at the bottom ; that is, instead of having a plate or a loose strap at the bottom, there was a solid flange cast on to the lug plate itself, which meant that in order to replace the spring (or any of the parts) it was necessary to lower or take down those lugs as well as the yoke and coupler, in order to get this spring in."

He then proceeds to tell what he did as the result of the ideas suggested by the difficulty in taking out the draft spring in this coach No. 1, saying (Tr., p. 48) :

> " I immediately set to work and sketched up the idea, which I later on patented, that is, I devised a pocket or lug casting, rather, as I may call it ; and, instead of having the lugs on the side, I placed the lugs above and below ; that is, I placed two above and two below ; and instead of having the yoke fastened on above and below, as had been the practice for many years, *I turned the yoke over ; or, in other words, I placed it on the side, connected it on to the side, and by doing that that gave me an opening at the bottom, so that I could insert the followers and springs from underneath,* and what I did, in connecting this yoke, I connected it on with a key, that is, I made use of the M. C. B. slot, M. C. B. standard slot (for the American continuous key), that was in the coupler. I provided slots in the pocket castings, also, and inserted the key through from the side, which was a very easy manner of applying the coupler. *That not only enabled an easy access to the followers and springs, but it enabled me to change the coupler within a—well, a few minutes'* time, where ordinarily it would take some times *two or three hours.* And, of course, in connection with that—that is, so far as the springs and followers are concerned, instead of laying the followers on the edge I put them on their end, and I placed one spring above the other, and between the springs I provided a projection on the followers, the projections were to keep the springs, keep them in line, and to prevent the coils from rubbing against one another, so as not to obstruct the compression or release of the springs. Then underneath the followers and springs I placed a plate, the

> plate to hold up the followers and springs ; this plate I fastened on, that is, on my first model I had quite a lot of difficulty in getting the plate to suit me just right, but on this first model I had lugs, I had three lugs on the side ; I had three lugs on the pocket itself and I had three lugs on the plate ; that is lugs extending downwardly. And through those lugs I had bolts, that is, I applied three bolts crosswise underneath the plate ; that was the support for the followers and springs. Also, I provided a shelf under the yoke, a shelf above and below, in the construction, so as to have something to guide the yoke, on sides. Of course, before I made this model I made a rough sketch."

He goes on to say (Tr., p. 48, Q. 13), that he made the sketch " directly after the experience I had had," *i. e.*, with coach No. 1, which was the latter part of February, 1899. The first model was made by Byers in March, 1899 (Qs. 16, 17), so that it is a story of continued effort. First, the difficulty with coach No. 1, which necessitated the taking down of the whole rigging ; second, the conception of the idea to obviate the difficulties immediately after February 16, 1899 ; and third, the making of the sketch and disclosure in the latter part of February, 1899, followed up, in March, by the making of the first model. Byers says (Tr., p. 49, Q. 24), that he first talked about his idea with his " partner " Marion Easter, early in March, 1899. He also talked to John F. McGill, the yard-master, and to E. N. Byers, the foreman, early in March, and a little later to George White (Tr., p. 50).

From Byers' description it will be remembered that the bottom plate of the first model was attached by a number of bolts which passed horizontally underneath the bottom plate. He was not satisfied with this (Tr., p. 50), and when he finally arrived at a satisfactory solution of the bottom plate problem, he made a second model in the summer or fall of the year, and there applied a key or bottom plate in a much simpler way ; that is, the plate was in the form of a key, which was held in position by being slid longitudinally through slots, and was held in place by a couple of

cotter keys (Tr., p. 50, Q. 35). The second model is described by Byers as follows (Tr., p. 51) :

> " This second model was a wooden structure, made of mostly half-inch material.
>
> * * * * * * *
>
> " A. The yoke was fastened on to the side of the coupler by means of a cross-key. This key extended through the pocket, the slots in the side of the pocket, and through the M. C. B. standard slot in the coupler shank as well as the yoke.
>
> " Q. 40. In this second model, how were the springs represented ?
>
> " A. They were represented with round wooden blocks. The blocks, each one of them, had a hole in it to represent the hole that would ordinarily be in a coil, a set of coil springs."

The second model Exhibit 10 was produced, and identified by Byers, who states (Tr., p. 51), that it was completed in the early part of December, 1899 ; that it is in the same condition now in which it was completed, except that it has had a coat of paint ; that a new follower has been put in the device ; that one of the slots is broken, and that the bottom key or plate is lost.

After the completion of this model Byers, on December 5, 1899, wrote to The National Malleable Casting Company, at Chicago (Tr., p. 52), stating that he had a new device, which he would like to sell ; that it was a car draft rigging ; that he had a working model of his device which we would like them to see, and he asked for an appointment at their Chicago office. The National Malleable Castings Company replied, on December 7, 1899, stating that they would be glad to have him send the model that they might examine it and asking him to send a copy of the patent, if he had procured a patent. Byers wrote again, on December 9, 1899, saying that he would rather bring the model to them, as he could explain its merits better than he could write them, and that he intended to be in Chicago the latter part of the next week. The National Malleable

Castings Company replied, on December 11, stating that they could see Mr. Byers the next week. Byers then wrote, on December 17, describing very completely the points of his invention which he believed to be important (Tr., p. 126). The letter is as follows:

"CAMERON, MO., December 17, 1899.

"THE NATIONAL MALLEABLE CASTINGS CO.:

"I have your letter of the 11th. I send you to-day a model of my draft rigging device. It is cheaply gotten up but the idea and outline is there. The parts painted gray is intended to be cast of malleable iron or cast steel. Of course the castings is to be lightened up by taking out material where it is not needed, and the outline maintained. I will simply mention a few of the most important features about this device, and these are that this device is durable, simple and cheaper, or at least as cheap as any other device in use doing the same work. *It is simple because the followers and springs can be changed just by removing the two split keys and prying up and knocking out the slide underneath the pocket without disturbing any other part this can be done in from 5 to 10 minutes where in other devices it would take from 1 to 3 or 4 hours, as the D Bar carrier iron and follower straps would all have to be taken down and generally there is some bolts to replace on account of breaking them in trying to turn or cut the nuts off. The D Bar and Yoke is gotten at just simply by removing the cross key,* and again you will see the pocket is so arranged so it will fit in the ordinary space between the draft timbers and sills and *allow the use of two sets of draft springs with only two followers.* You will note furthermore that it is substantial and safe. Should the followers, springs or yoke break, the D Bar would then pull direct by the cross key and the pocket itself, as the cross key will be very strong when attached to this device, it being the American key which is now used for the American continuous rigging, but as you see, the yoke connects up against the D Bar where with the Am rods the rod connect 7 or 8 from the D Bar. This you see makes a great difference in the strain on this key. I think from this you will be in a position to see into the device and appreciate its merits; there are many other good points I will not take time to write. I expect to be in your city the latter part of this week. I will then call you. Since I first corresponded with you, I have a fairly good offer, but I am

not only after the money I may get out of it, but want to see the device go into extensive use as well. This model represents one half size.

Yours very truly,

J. J. BYERS,
Lock Box 482,
Cameron, Mo."

It is difficult to improve on this description. He says " the followers and springs can be changed by merely removing the two split keys " (the cotter pins) which held the slide or plate and " prying up and knocking out the slide underneath the pocket without *disturbing any other part.*" This could be done " in 5 to 10 minutes where in other devices it would take from 1 to 3 or 4 hours, as the D Bar (draw bar) carrier iron and followers straps (the supporting cheek plates) would all have to be taken down and generally there is some bolts to replace on account of breaking them in trying to turn or cut the nuts off."

Byers went to Chicago (Tr., p. 54), had the conference with Mr. Mark, of The National Malleable Castings Company, and, after the conference, Byers wrote again on December 26, 1899 (Tr., p. 127), to The National Malleable Castings Company, describing a modification of his invention for use on " furniture cars where the draft rigging is attached directly to the sills and where the ensill (end sill) does not admit of the Am. (American) cross key, and also to parties that does not wish to apply the key in the old way." He then goes on to give exact dimensions for the followers, the space in the pocket, and the inside and outside dimensions of the pocket, so that the device, when constructed, would comply with service requirements. On the third page of the letter were sketches illustrating the modification Byers had in mind, and this modification is shown in Figs. 6, 7 and 8 of the patent. Byers went back to Chicago for a conference with the National Malleable Castings Company in January, 1900, and arranged for the application papers to be drawn up (Tr., p. 55).

Byers identifies the two structures which are set up at opposite ends of Plaintiff's Exhibit No. 9. The casting at one end of the exhibit was one which was applied to a caboose or way-car on the Burlington Railroad in January, 1902, and was used for two or three years (Tr., p. 56, Qs. 88–95). E. N. Byers also knew of the use of the rigging on this way-car (Tr., p. 69, x-Q. 64). After the way-car had been wrecked, Byers had the pocket shipped to him. The casing at the other end of Exhibit No. 9 was made in 1907 or 1908. At least six of the form shown at the first mentioned end were made in January, 1902, and at least four of the form shown at the other end of the model were made in 1907 or 1908 (Tr., pp. 57, 61). Byers explains that the reason The National Malleable Castings Company, whose employ he entered in 1907, did not at once put his devices on the market was that the Company was not in the draft rigging business, but was in the business of supplying draft rigging parts to customers who sold devices to the railroads and to car builders, and if they had begun selling draft gears they would have been entering into competition with their customers (Tr., p. 57, Q. 100 ; p. 61, Qs. 139, 140). Byers explains (Tr., p. 64) that while he was personally desirous of getting his gears on the market, The National Malleable Castings Company was not anxious to do so in competition with its customers.

The foregoing is a synopsis of the testimony of Byers, to whom the patent in suit was granted, and he is fully corroborated by the testimony of other witnesses.

Edward N. Byers, general car foreman of the Burlington repair yards at Cameron, Missouri, for thirty-five years, who produced two time books above referred to (Plaintiffs' Exhibits 12 and 13, Byers' Time Books), states (Tr., pp. 64, 65), that he made the entries in the books every day, and that they show the names of all the men who were employed under him. He explains that the time books show that on February 16, 1899, Marion Easter, William Stuart

and J. F. Shafin put a draw-bar in coach No. 1, working overtime on it until 1.40 A. M.; that Byers, the patentee, was an inspector of repairs, a sort of assistant foreman, and that in March, 1899 (Tr., p. 65, Qs. 19, 20), he told E. N. Byers about some ideas he had in draft riggings. E. N. Byers in referring to the connection between the repairing of coach No. 1 and Byers' invention, says (Tr., p. 70):

> "Q. 74. You have referred to this coach No. 1. In putting this draw-bar in coach No. 1, in what way was this connected, in your mind, with what J. J. Byers told you about his ideas of a draft rigging?
>
> "A. Well, you see—we will say this is—here is the lug castings, they have two bolts down through the timbers here, and there is a lip comes over underneath, then you have what you call the lug bolts in here (indicating). Now, whenever there is a follower broken or a spring broken, you would have to take the nuts off of here (indicating), these two, and take the nuts off of these bolts here and get them off, and let the whole thing drop down. Then when you had it down you would have to put your lugs together. At the center of the lugs there was a little bit of an off-set that we call a stem bolt—we call it that out there—that was to hold the lugs close together so they would not split, so the followers slid by the off-set in the casting—the whole thing would have to be put together, put up together. And also now, you take any freight car—
>
> "Q. 75. Well, did putting this particular draw bar in coach No. 1 have any connection in your mind with what J. J. Byers told you about his ideas for draft rigging?
>
> "A. Certainly.
>
> "Q. 76. And what period of time intervened between repairing Coach No. 1 and the time J. J. Byers explained his ideas to you?
>
> "A. That was probably a week or so, may be two. I could not say, but it was along shortly before he goes to work and makes this model."

E. N. Byers, in speaking of J. J. Byers' ideas in draft rigging, said (Tr., p. 65):

> "Well, he said it was an awful lot of work to put draw bars up, if he had to take the lugs, as we call them, on the coach—they had bolts

in each of the timbers, and had to take it all down and put it together and put it up by jacks. And he got an idea in his head he could overcome that. And along in, I think, during the middle or latter part of February, he went to work on a model in the tool car that belonged to our wrecking outfit, and he made a model and I looked at it, and it looked good to me, it looked as though we would not have quite so much work getting them up, if we could get that thing in use.

"Q. 22. You speak of lugs, do you mean cheek castings?

"A. Well, that is your way of saying, but we call them lugs. I am going to stick to the old—to what we say over there, in calling them.

"Q. 23. What was this model he showed you? Describe it, and what were his ideas?

* * * * * *

"The yoke came about—(indicating).

"Q. 24. Pointing in a horizontal plane? A. Yes, then he had two springs made out of brass. He had one spring about the other, and that caught my eye, and I thought that was very good, because I found that the ones with the two springs, that they always found on wooden cars, that the tension—it is a very curvy road we have—that the two springs in a curvy road, it would crack our draft timbers there, and by the one spring above the other it would not do that. That was my idea. I thought that was pretty good.

"And then another thing, in a heavy shock of an engine, or a jerk, it would have the same pull or push on both springs as one back of the other would not, I thought. And I thought it was a good thing.

"I paid no more attention to it, because I was very busy with my other work that I had to attend to.

"Q. 25. And how was the yoke connected to the draw-bar?

"A. That was so you could use what you call the American tail-end coupler, with a key, draft key, standard draft key.

"Q. 26. You mean the coupler had a slot in it for the American Continuous bolt?

"A. Yes. Then a yoke—in the yoke was a slot and it went in that way. (Indicating.)

"Q. 27. That is the key went through the yoke and the slot in the coupler horizontally?

"A. Yes, sir.

* * * * * *

"Q. 72. You have spoken of the bottom of the first model being secured by bolts. In what way was it secured?

"A. Well, they were cross-ways, ran cross-ways. I may be mistaken on it, but they ran cross-ways, two bolts, that is what I—

"Q. 73. And could you take them out readily? A. Yes. *That was the idea, to have the spring and everything go down, and you would not have to work two or three hours in putting up a draw bar like you do now, and always have done.*"

E. N. Byers goes on to say that J. J. Byers went "to work along in the fall to make another one"; that is, another model, and that he saw it just before he went to Chicago with him, for which trip E. N. Byers procured passes. In referring to the second model which E. N. Byers says he saw "along in the forepart of December, 1899," he states (Tr., p. 66):

"A. Well, that was a—something along the—something like the first one, with the exceptions that underneath the first one had, as I understand it, bolts across to hold up the plate for the spring, but the last one had a plate, I think, with bolts. Otherwise, it was about the same as the other one, only it was a neater finish than the first one. The first one was clumsy, but it showed the ideas. The last one was more neatly finished, but it had the springs—only it had the wooden blocks in place of the springs. The other one just had some little brass springs that showed, but this one had wooden blocks to represent the springs."

He identifies the second model, stating that it is the same as when he first saw it, except that it has been painted and has a new and unpainted follower in it, and that aside from where it is broken, and with the exception of the missing plate, it is the same (Tr., pp. 66-7). E. N. Byers explains that he lost interest in it because he had too much to attend to, and that prior to that time he had lost money on patents (Tr., p. 67).

John F. McGill, who was Yard Master at Cameron, Mis-

souri, during 1899 and 1900, says that in the "latter part of February or the first part of March, along in there," Byers explained his ideas about draft rigging to him (R., Vol. I., p. 114). At first he simply spoke about having a good thing, telling McGill that he was going to draw a sketch of his ideas, and would explain it to him after he had drawn the sketch. He obtained from McGill some sheets of paper, and on one occasion he showed McGill with reference to a car what quick service his device would give in pulling out the draw bars and putting up the springs and followers, etc. (Tr., p. 72). He states that he went over to Byers' house one evening, and saw some of his drawings, and "then afterwards, in March, after one model had been constructed, or before it was complete, he came to me one time, and he told me what a time he was having in trying to find something to represent his springs," and that he finally found some brass springs. He goes on to describe the model as follows (Tr., pp. 72-3):

"Q. 23. When was it that you saw this model?

"A. Why, I guess I seen it in parts all along there as it was made in March, '99.

"Q. 24. Describe what it was like?

"A. It was fifteen or sixteen inches long, four or five inches wide and seven or eight inches high—with two springs one above the other and a follower on each end, and a plate underneath to hold the springs and the follower in position. The yoke, instead of being fastened onto the draw bar top and bottom was reversed to the side horizontally with an eye-hole which the key passed through, the draw bar and the yoke being connected together by this key.

* * * * * * *

"Q. 26. And what was the rest of the model like?

"A. It was a little box shaped—a little rough box shaped concern about 18 inches long, as I say.

"Q. 27. How was the plate?

"A. The plate was flat, or was a solid piece clear across the bottom. You mean the bottom plate?

"Q. 28. Yes, the bottom plate. How was it attached to the rest of the model?

"A. I think it was attached with a bolt on each end. You open one end and it would drop down—everything

would drop down, the springs and followers would fall to the ground.

" Q. 29. How did that key which connected the yoke and coupler run ?

" A. Passed through the draft beams, through the yoke, through the stem end of the draw bar.

" Q. 30. In what direction ?

" A. In a horizontal direction."

McGill goes on to state that after making this model in March, 1899, Byers made two or three changes in it, with particular reference to the bottom plate, and later on in the year he made a new model (Q. 31). McGill had an interest in the idea prior to the time he went to Chicago with Byers to interview The National Malleable people, but just a day or so before they went to Chicago on this visit McGill backed out of the arrangement, stating he " told Jake I did not think I would have anything more to do with it, I thought we would have to wait too long before we would realize anything on it " (Q. 40). McGill says that the second model was like the first except for the bottom plate and the springs, representations of which was made of wood. He identifies the second model, which is Plaintiff's Exhibit No. 10, and says that he first saw it in November or December, 1899, during its construction (Tr., p. 74). McGill states that since he last saw the model in 1899, the slides of the bottom plate have been broken, the sliding key or bottom plate is gone, and that a new follower plate is in the device, and that it has had a coat of paint of a different color since last he saw it (Tr., p. 75, Qs. 52-54). McGill also remembers that he furnished the wood out of which the representations of the springs were made (Qs. 55, 56).

George White, as is shown by the time books, entered the employ of the Burlington at Cameron on March 6, 1899, and left on June 3, 1900 (Tr., p. 64). He testifies that in the summer of 1899 Byers told him that he wanted him to make a model of some kind, and he made the model, which, when

completed, was a model of a draft rigging (Tr., p. 77). As White stated on the stand, he could draw the device easier than he could describe it, he proceeded to make a sketch and when the sketch was finished and marked White then described it, and counsel noted the various parts on the sketch as White described them (Tr., p. 77). White then identified Plaintiff's Exhibit No. 10, the second model, as being the model which he built for Byers in the fall of 1899. White says that the model is in the same condition as when he completed it in the fall of 1899, except that it is broken at two points on the bottom "where the bottom key goes in, that holds in the springs and followers," and that it has been painted since he saw it (Tr., p. 78).

It is therefore apparent that Byers' proofs are of the character required by the decisions. Byers' conception, connected, as it was, with the difficulties of repairing Coach No. 1, which difficulties are shown by the time book to have occurred on February 16, 1899; the production of the second model, Exhibit No 10, clearly identified by the witnesses and shown by the correspondence with the National Malleable Castings Company to have been in existence in December, 1899; Byers' two letters of December 17 and 26, 1899, which so completely describe the invention, and his early filing date of April 21, 1900, clearly supply the "concrete, visible, cotemporaneous proofs" so emphasized as being necessary for consideration in connection with proofs of this character. As was said by the Circuit Court of Appeals for the Seventh Circuit in *Diamond Meter Co. vs. Westinghouse*, 152 Fed. Rep., 704, 712:

> "This is not a case where witnesses, years afterwards, are brought in to antedate an alleged anticipation by the efforts of unaided memory. *Certain time marks are indisputably fixed.*"
>
> See, also, *Westinghouse vs. Stanley*, 133 Fed., 167 (1st C. C. A.).

Notes on Petitioner's Brief.

The Petitioner's position as against the validity of claims 3, 5 and 6 of the patent in suit is that the draft-rigging of the Frost patent is one in which the spring and followers are removable from below, and that the Circuit Court of Appeals erred in differentiating the Byers device from the Frost on the ground that Byers contemplates "followers rectangular in shape included entirely within the vertical lines of the yoke with free removability from below."

The Petitioner's position is entirely unsound.

In taking down the Frost device, the spring must first be removed. It is indeed true that the spring can freely be removed from below in the form shown in Frost patent 532,272, for there is nothing whatever to hold it in place at any time. In the form shown in Fig. 6 of the other Frost patent, namely, 510,854, there is a portion projecting from each follower a short distance into the spring at each end, so that the spring, before being capable of removal, must first be compressed so as to release it from these projections. These springs are necessarily very heavy and strong (they weigh 55 pounds in plaintiff's and defendant's devices) and, in their position beneath a car, it would be extremely difficult to compress them so as to enable them to be dropped down (Tr., p. 103). Then, after the springs are removed, in some way and with great difficulty so far as concerns one of the Frost forms, the followers cannot be removed by dropping them down, because they have projections extending out over the sides of the yoke. Each follower, in modern draft gears, weighs 60 pounds, and that heavy piece must be turned around so that it stands lengthwise of the yoke before it can be dropped down. Consider, for a moment, attempting to do this when working under a car where space is limited, and the device is at an inconvenient place for working.

Difficulties of this kind are exactly what Byers was working to overcome, and he did overcome them by providing what the Circuit Court of Appeals called a "rectangular" follower. That term obviously was used merely as a convenient form of description. It makes little difference whether the form is or is not strictly rectangular, *so long as* the follower is of such shape as to bear on the lugs *above and below* the yoke (*not* at the sides of it) and to be contained *entirely within* the space embraced by the yoke. When such is the construction, the springs and followers may freely be removed from below, by merely causing them to drop down.

But the Petitioner asserts that there is nothing in the Byers patent in suit to require that the followers shall be of that form of construction. There is. This is required by drawings, by specification and by claim.

Fig. 2 is a view looking down on top of the device and it is seen that the followers 6 and 6′ are entirely within the yoke 2′, no part of either follower extending out over the sides of the yoke. This appears also from Fig. 3, where the yoke 2′ (shown here in cross-section) is entirely outside of the follower 6′. There can be no question as to what the drawings show.

The specification is likewise clear. The followers are not connected with the drawbar, "otherwise than by being placed *between the sides of the yoke*" (p. 1, lines 59, 60). As distinguished from the Frost device in which projections from the followers extend out over the sides of the yoke to engage with stops placed at the side of the yoke, the Byers followers contact with "lugs 5, 5 which extend *across the pocket above and below*" (p. 1, lines 38). That points to the essential difference in construction—the lugs being above and below, instead of outside, the yoke, the followers which are to engage these lugs do not extend outside of the side limits of the yoke. The result is that on removing the bottom plate 9, "the followers and plates may be removed freely from within the yoke in a vertical direction" (p. 2, lines 55-6). That is, they are re-

moved by dropping them straight down—something impossible in the Frost structure.

Claim 3 emphasises this same thing by reciting that the lugs extend across " at the *upper and lower* portions of the pocket " and the " followers *within* the pocket * * * bear against the lugs ", and the yoke extends within the pocket between the lugs and *around* the rear follower. The yoke does not pass through the followers as in the Frost and Pilcher patents, but around them.

Certainly the Circuit Court of Appeals was right in holding the Byers patent to be for a new construction and to be valid.

But the Petitioner urges that the history of the application on which the Byers patent issued shows that the foregoing was not the meaning given to the patent and claims at the time of their issuance. No ; that is not at all the correct conclusion. A claim was rejected on the Pilcher patent and the applicant then overcame the rejection by an amendment, clearly distinguishing the thing claimed from the prior patent to Pilcher. That was the simple way of overcoming the Examiner's objection. It might have been overcome in other ways. We are not attempting to construe the claim as though the amendment had not been made—in fact that claim is not here in suit. Of course, as this Court said in *Roemer vs. Peddie*, 132 U. S., 317, when a patentee inserts a limitation for the pur pose of obtaining his claim he cannot thereafter urge that the claim be construed as though the limitation were not contained in it. But that is not at all the situation here. The Petitioner's position, if sound, would mean that an applicant must, in overcoming a reference, point out *every* particular in which the reference fails to meet the claim or be considered to have made an admission that similarities exist in the particulars not pointed out. That is absurd.

As to infringement, the Petitioner urges that its device

does not contain the "pocket" specified in the claims. The Byers patent does not require that the pocket be made in one piece, but specifically states that it merely *may* be made in a single piece. The Petitioner builds up from several pieces a structure having precisely the same characteristics. Of course, the Petitioner's cheek plate, illustrated on page 27 of its brief does not, in itself, constitute a pocket. But the Petitioner in selling this part, and others like them, *knew* that one cheek plate was not to be used by itself. It knew that the two cheek plates were to be fastened in position facing each other, and that a top plate was to extend over them, as shown in our illustration in this brief. In this arrangement, the parts present all the features of the thing which is designated in the patent in suit as a pocket. The springs and followers are enclosed; the followers bear on lugs on the cheek plates extending horizontally above and below the yoke; the sides of the yoke extend in the sides of the cheek plates, just as Byers illustrates and, on removal of the bottom plate, the springs and followers are removable from below exactly as in the Byers patent.

Clearly the decision of the Circuit Court of Appeals holding claims 3, 5 and 6 valid and infringed, should be affirmed.

Respectfully submitted,

CHARLES NEAVE,

CLARENCE D. KERR,

Of Counsel for Respondents.

Janusry, 1918.

T. H. SYMINGTON COMPANY *v.* NATIONAL MALLEABLE CASTINGS COMPANY ET AL.

CERTIORARI TO THE CIRCUIT COURT OF APPEALS FOR THE FIRST CIRCUIT.

MINER *v.* T. H. SYMINGTON COMPANY.

CERTIORARI TO THE CIRCUIT COURT OF APPEALS FOR THE SEVENTH CIRCUIT.

Nos. 31, 24. Argued April 19, 22, 1918.—Decided June 9, 1919.

Where certain claims of a patent called for a "pocket" or housing, without indicating whether it must be integral or might also be made in two or more parts to be assembled, *held* that the latter interpretation was the correct one, in view of another claim calling for the integral form distinctly and a provision of the specifications saying "the pocket may be cast in a single piece." P. 385.

As between two patentees, he of the prior application and patent is presumptively the prior inventor. *Id.*

Oral testimony tending to show prior invention as against an existing patent is, in the absence of models, drawings, or kindred evidence, open to grave suspicion, particularly if taken long after the time of alleged invention. P. 386.

A mental conception in process of development, occasionally outlined

on scraps of paper, subsequently discarded, and roughly worked into a small wooden model with a pen-knife, *held* not to amount to invention. P. 386.

230 Fed. Rep. 821; 234 *id.* 343, affirmed.

229 Fed. Rep. 730, reversed.

THE cases are stated in the opinion.

Mr. George I. Haight for petitioner in No. 24.

Mr. Melville Church and *Mr. Gilbert P. Ritter*, with whom *Mr. W. S. Symington, Jr.*, and *Mr. Ernest F. Mechlin* were on the briefs, for petitioner in No. 31 and respondent in No. 24.

Mr. Charles Neave, with whom *Mr. Clarence D. Kerr* was on the brief, for respondents in No. 31.

MR. JUSTICE VAN DEVANTER delivered the opinion of the court.

These cases are so related that they may be disposed of together. Each is a suit to enjoin the infringement of a patent. One was begun in the District of Maine and is based on letters patent granted May 7, 1901, to Jacob J. Byers on an application filed April, 21 1900. The other was begun in the Northern District of Illinois and is based on letters patent granted February 18, 1902, to William H. Emerick on an application filed May 24, 1901. Both patents cover an improvement in draft rigging for railroad cars. In each suit it became necessary to compare the patents, determine whether the invention of one was anticipated by the other, and ascertain which of the patentees was the original and first inventor. Ultimately the suits reached the Circuit Courts of Appeals for the circuits in which they were brought. In the Maine suit the court held that Byers was the prior inventor and that

claims three, five and six of the patent to him were valid and infringed. 230 Fed. Rep. 821; 234 Fed. Rep. 343. In the Illinois suit the court held that Emerick was the prior inventor and that claims one, two, three and four of the patent to him were valid and infringed. 229 Fed. Rep. 730. These conflicting decisions led to the allowance of the present writs of certiorari.

While the discussion at the bar and in the briefs has taken a wide range, only two points need be considered.

One of the elements called for by the claims in the Byers patent which were sustained is a "pocket" or housing, which is to hold other parts in place. The corresponding element of the Emerick patent is described as "counterpart castings" and is in two parts. Whether the Byers pocket was to be integral or might be in two or more parts is a matter about which the two courts differed. In the Maine suit it was held that the claims were not limited to an integral pocket, but in the Illinois suit the ruling was the other way. The former view, as it seems to us, is the right one. There is nothing in Byers' claims which were sustained indicating that the pocket is to be integral, while there is a distinct call for such a pocket in claim nine. The difference in terms points persuasively to a difference in purpose, and the specification does even more, for it says "the pocket may be cast in a single piece." This is the common form of designating an admissible alternative in such instruments. Of course, the other alternative is casting it in a plurality of pieces. When this is done and the pieces are assembled they form a pocket and serve in the same way as if there were but one.

The courts differed also as to who was the prior inventor. Presumptively it was Byers, for his application and patent were both prior to Emerick's application. Recognizing this, the parties claiming under Emerick sought by proof to carry his invention back to an earlier date, and to that end produced the testimony of three

witnesses, Emerick being one. All three testified in both suits, their testimony being substantially the same in both. In the Maine suit the court pronounced this testimony too equivocal and uncertain to establish priority as against Byers' application and patent, but in the Illinois suit the court, although regarding the testimony as hardly satisfactory, gave effect to it. On reading it we are persuaded that it was clearly insufficient.

This court has pointed out that oral testimony tending to show prior invention as against existing letters patent is, in the absence of models, drawings or kindred evidence, open to grave suspicion; particularly if the testimony be taken after the lapse of years from the time of the alleged invention. *Deering* v. *Winona Harvester Works*, 155 U. S. 286, 300. And it has said: "A conception of the mind is not an invention until represented in some physical form, and unsuccessful experiments or projects, abandoned by the inventor, are equally destitute of that character." *Clark Thread Co.* v. *Willimantic Linen Co.*, 140 U. S. 481, 489.

Here the evidence was oral. No model, drawing or kindred exhibit was produced. Fifteen years had elapsed since the date as of which invention was being claimed. The testimony was not direct and strong, but weak and uncertain and in some respects contradictory. At most it only disclosed a mental conception in process of development which occasionally was outlined on scraps of paper and then committed to the waste basket and was roughly worked into a wooden model four or five inches long with a pen knife. The first real model or drawing was made about the time of the actual application for a patent and there was no attempt at reduction to practice until after the patent was issued. Such proof under the rule just stated does not suffice.

Decree in No. 31 affirmed.
Decree in No. 24 reversed.